Alcatel-Lucent 5620

SERVICE AWARE MANAGER | RELEASE 9.0 R2

LTE RAN USER GUIDE

3HE 06506 AAAB TQZZA Edition 01

Alcatel-Lucent Proprietary
This document contains proprietary information of Alcatel-Lucent and is not to be disclosed or used except in accordance with applicable agreements.
Copyright 2011 © Alcatel-Lucent. All rights reserved.

Alcatel-Lucent assumes no responsibility for the accuracy of the information presented, which is subject to change without notice.

Alcatel, Lucent, Alcatel-Lucent, the Alcatel-Lucent logo, and TiMetra are registered trademarks of Alcatel-Lucent. All other trademarks are the property of their respective owners.

Copyright 2011 Alcatel-Lucent.
All rights reserved.

Disclaimers

Alcatel-Lucent products are intended for commercial uses. Without the appropriate network design engineering, they must not be sold, licensed or otherwise distributed for use in any hazardous environments requiring fail-safe performance, such as in the operation of nuclear facilities, aircraft navigation or communication systems, air traffic control, direct life-support machines, or weapons systems, in which the failure of products could lead directly to death, personal injury, or severe physical or environmental damage. The customer hereby agrees that the use, sale, license or other distribution of the products for any such application without the prior written consent of Alcatel-Lucent, shall be at the customer's sole risk. The customer hereby agrees to defend and hold Alcatel-Lucent harmless from any claims for loss, cost, damage, expense or liability that may arise out of or in connection with the use, sale, license or other distribution of the products in such applications.

This document may contain information regarding the use and installation of non-Alcatel-Lucent products. Please note that this information is provided as a courtesy to assist you. While Alcatel-Lucent tries to ensure that this information accurately reflects information provided by the supplier, please refer to the materials provided with any non-Alcatel-Lucent product and contact the supplier for confirmation. Alcatel-Lucent assumes no responsibility or liability for incorrect or incomplete information provided about non-Alcatel-Lucent products.

However, this does not constitute a representation or warranty. The warranties provided for Alcatel-Lucent products, if any, are set forth in contractual documentation entered into by Alcatel-Lucent and its customers.

This document was originally written in English. If there is any conflict or inconsistency between the English version and any other version of a document, the English version shall prevail.

When printed by Alcatel-Lucent, this document is printed on recycled paper.

Alcatel-Lucent License Agreement

SAMPLE END USER LICENSE AGREEMENT

1. LICENSE

1.1 Subject to the terms and conditions of this Agreement, Alcatel-Lucent grants to Customer and Customer accepts a nonexclusive, nontransferable license to use any software and related documentation provided by Alcatel-Lucent pursuant to this Agreement ("Licensed Program") for Customer's own internal use, solely in conjunction with hardware supplied or approved by Alcatel-Lucent. In case of equipment failure, Customer may use the Licensed Program on a backup system, but only for such limited time as is required to rectify the failure.

1.2 Customer acknowledges that Alcatel-Lucent may have encoded within the Licensed Program optional functionality and capacity (including, but not limited to, the number of equivalent nodes, delegate workstations, paths and partitions), which may be increased upon the purchase of the applicable license extensions.

1.3 Use of the Licensed Program may be subject to the issuance of an application key, which shall be conveyed to the Customer in the form of a Supplement to this End User License Agreement. The purchase of a license extension may require the issuance of a new application key.

2. PROTECTION AND SECURITY OF LICENSED PROGRAMS

2.1 Customer acknowledges and agrees that the Licensed Program contains proprietary and confidential information of Alcatel-Lucent and its third party suppliers, and agrees to keep such information confidential. Customer shall not disclose the Licensed Program except to its employees having a need to know, and only after they have been advised of its confidential and proprietary nature and have agreed to protect same.

2.2 All rights, title and interest in and to the Licensed Program, other than those expressly granted to Customer herein, shall remain vested in Alcatel-Lucent or its third party suppliers. Customer shall not, and shall prevent others from copying, translating, modifying, creating derivative works, reverse engineering, decompiling, encumbering or otherwise using the Licensed Program except as specifically authorized under this Agreement. Notwithstanding the foregoing, Customer is authorized to make one copy for its archival purposes only. All appropriate copyright and other proprietary notices and legends shall be placed on all Licensed Programs supplied by Alcatel-Lucent, and Customer shall maintain and reproduce such notices on any full or partial copies made by it.

3. TERM

3.1 This Agreement shall become effective for each Licensed Program upon delivery of the Licensed Program to Customer.

3.2 Alcatel-Lucent may terminate this Agreement: (a) upon notice to Customer if any amount payable to Alcatel-Lucent is not paid within thirty (30) days of the date on which payment is due; (b) if Customer becomes bankrupt, makes an assignment for the benefit of its creditors, or if its assets vest or become subject to the rights of any trustee, receiver or other administrator; (c) if bankruptcy, reorganization or insolvency proceedings are instituted against Customer and not dismissed within 15 days; or (d) if Customer breaches a material provision of this Agreement and such breach is not rectified within 15 days of receipt of notice of the breach from Alcatel-Lucent.

3.3 Upon termination of this Agreement, Customer shall return or destroy all copies of the Licensed Program. All obligations of Customer arising prior to termination, and those obligations relating to confidentiality and nonuse, shall survive termination.

4. CHARGES

4.1 Upon shipment of the Licensed Program, Alcatel-Lucent will invoice Customer for all fees, and any taxes, duties and other charges. Customer will be invoiced for any license extensions upon delivery of the new software application key or, if a new application key is not required, upon delivery of the extension. All amounts shall be due and payable within thirty (30) days of receipt of invoice, and interest will be charged on any overdue amounts at the rate of 1 1/2% per month (19.6% per annum).

5. SUPPORT AND UPGRADES

5.1 Customer shall receive software support and upgrades for the Licensed Program only to the extent provided for in the applicable Alcatel-Lucent software support policy in effect from time to time, and upon payment of any applicable fees. Unless expressly excluded, this Agreement shall be deemed to apply to all updates, upgrades, revisions, enhancements and other software which may be supplied by Alcatel-Lucent to Customer from time to time.

6. WARRANTIES AND INDEMNIFICATION

6.1 Alcatel-Lucent warrants that the Licensed Program as originally delivered to Customer will function substantially in accordance with the functional description set out in the associated user documentation for a period of 90 days from the date of shipment, when used in accordance with the user documentation. Alcatel-Lucent's sole liability and Customer's sole remedy for a breach of this warranty shall be Alcatel-Lucent's good faith efforts to rectify the nonconformity or, if after repeated efforts Alcatel-Lucent is unable to rectify the nonconformity, Alcatel-Lucent shall accept return of the Licensed Program and shall refund to Customer all amounts paid in respect thereof. This warranty is available only once in respect of each Licensed Program, and is not renewed by the payment of an extension charge or upgrade fee.

6.2 ALCATEL-LUCENT EXPRESSLY DISCLAIMS ALL OTHER WARRANTIES, REPRESENTATIONS, COVENANTS OR CONDITIONS OF ANY KIND, WHETHER EXPRESS OR IMPLIED, INCLUDING WITHOUT LIMITATION, WARRANTIES OR REPRESENTATIONS OF WORKMANSHIP, MERCHANTABILITY, FITNESS FOR A PARTICULAR PURPOSE, DURABILITY, OR THAT THE OPERATION OF THE LICENSED PROGRAM WILL BE ERROR FREE OR THAT THE LICENSED PROGRAMS WILL NOT INFRINGE UPON ANY THIRD PARTY RIGHTS.

6.3 Alcatel-Lucent shall defend and indemnify Customer in any action to the extent that it is based on a claim that the Licensed Program furnished by Alcatel-Lucent infringes any patent, copyright, trade secret or other intellectual property right, provided that Customer notifies Alcatel-Lucent within ten (10) days of the existence of the claim, gives Alcatel-Lucent sole control of the litigation or settlement of the claim, and provides all such assistance as Alcatel-Lucent may reasonably require. Notwithstanding the foregoing, Alcatel-Lucent shall have no liability if the claim results from any modification or unauthorized use of the Licensed Program by Customer, and Customer shall defend and indemnify Alcatel-Lucent against any such claim.

6.4 Alcatel-Lucent Products are intended for standard commercial uses. Without the appropriate network design engineering, they must not be sold, licensed or otherwise distributed for use in any hazardous environments requiring fail safe performance, such as in the operation of nuclear facilities, aircraft navigation or communication systems, air traffic control, direct life-support machines, or weapons systems, in which the failure of products could lead directly to death, personal injury, or severe physical or environmental damage. The Customer hereby agrees that the use, sale, license or other distribution of the Products for any such application without the prior written consent of Alcatel-Lucent, shall be at the Customer's sole risk. The Customer also agrees to defend and hold Alcatel-Lucent harmless from any claims for loss, cost, damage, expense or liability that may arise out of or in connection with the use, sale, license or other distribution of the Products in such applications.

7. LIMITATION OF LIABILITY

7.1 IN NO EVENT SHALL THE TOTAL COLLECTIVE LIABILITY OF ALCATEL-LUCENT, ITS EMPLOYEES, DIRECTORS, OFFICERS OR AGENTS FOR ANY CLAIM, REGARDLESS OF VALUE OR NATURE, EXCEED THE AMOUNT PAID UNDER THIS AGREEMENT FOR THE LICENSED PROGRAM THAT IS THE SUBJECT MATTER OF THE CLAIM. IN NO EVENT SHALL THE TOTAL COLLECTIVE LIABILITY OF ALCATEL-LUCENT, ITS EMPLOYEES, DIRECTORS, OFFICERS OR AGENTS FOR ALL CLAIMS EXCEED THE TOTAL AMOUNT PAID BY CUSTOMER TO ALCATEL-LUCENT HEREUNDER. NO PARTY SHALL BE LIABLE FOR ANY INDIRECT, SPECIAL OR CONSEQUENTIAL DAMAGES, WHETHER OR NOT SUCH DAMAGES ARE FORESEEABLE, AND/OR THE PARTY HAD BEEN ADVISED OF THE POSSIBILITY OF SUCH DAMAGES.

7.2 The foregoing provision limiting the liability of Alcatel-Lucent's employees, agents, officers and directors shall be deemed to be a trust provision, and shall be enforceable by such employees, agents, officers and directors as trust beneficiaries.

8. GENERAL

8.1 Under no circumstances shall either party be liable to the other for any failure to perform its obligations (other than the payment of any monies owing) where such failure results from causes beyond that party's reasonable control.

8.2 This Agreement constitutes the entire agreement between Alcatel-Lucent and Customer and supersedes all prior oral and written communications. All amendments shall be in writing and signed by authorized representatives of both parties.

8.3 If any provision of this Agreement is held to be invalid, illegal or unenforceable, it shall be severed and the remaining provisions shall continue in full force and effect.

8.4 The Licensed Program may contain freeware or shareware obtained by Alcatel-Lucent from a third party source. No license fee has been paid by Alcatel-Lucent for the inclusion of any such freeware or shareware, and no license fee is charged to Customer for its use. The Customer agrees to be bound by any license agreement for such freeware or shareware. CUSTOMER ACKNOWLEDGES AND AGREES THAT THE THIRD PARTY SOURCE PROVIDES NO WARRANTIES AND SHALL HAVE NO LIABILITY WHATSOEVER IN RESPECT OF CUSTOMER'S POSSESSION AND/OR USE OF THE FREEWARE OR SHAREWARE.

8.5 Alcatel-Lucent shall have the right, at its own expense and upon reasonable written notice to Customer, to periodically inspect Customer's premises and such documents as it may reasonably require, for the exclusive purpose of verifying Customer's compliance with its obligations under this Agreement.

8.6 All notices shall be sent to the parties at the addresses listed above, or to any such address as may be specified from time to time. Notices shall be deemed to have been received five days after deposit with a post office when sent by registered or certified mail, postage prepaid and receipt requested.

8.7 If the Licensed Program is being acquired by or on behalf of any unit or agency of the United States Government, the following provision shall apply: If the Licensed Program is supplied to the Department of Defense, it shall be classified as "Commercial Computer Software" and the United States Government is acquiring only "restricted rights" in the Licensed Program as defined in DFARS 227-7202-1(a) and 227.7202-3(a), or equivalent. If the Licensed Program is supplied to any other unit or agency of the United States Government, rights will be defined in Clause 52.227-19 or 52.227-14 of the FAR, or if acquired by NASA, Clause 18-52.227-86(d) of the NASA Supplement to the FAR, or equivalent. If the software was acquired under a contract subject to the October 1988 Rights in Technical Data and Computer Software regulations, use, duplication and disclosure by the Government is subject to the restrictions set forth in DFARS 252-227.7013(c)(1)(ii) 1988, or equivalent.

8.8 Customer shall comply with all export regulations pertaining to the Licensed Program in effect from time to time. Without limiting the generality of the foregoing, Customer expressly warrants that it will not directly or indirectly export, reexport, or transship the Licensed Program in violation of any export laws, rules or regulations of Canada, the United States or the United Kingdom.

8.9 No term or provision of this Agreement shall be deemed waived and no breach excused unless such waiver or consent is in writing and signed by the party claimed to have waived or consented. The waiver by either party of any right hereunder, or of the failure to perform or of a breach by the other party, shall not be deemed to be a waiver of any other right hereunder or of any other breach or failure by such other party, whether of a similar nature or otherwise.

8.10 This Agreement shall be governed by and construed in accordance with the laws of the Province of Ontario. The application of the United Nations Convention on Contracts for the International Sale of Goods is hereby expressly excluded.

Preface

The Preface provides general information about the 5620 Service Aware Manager documentation suite.

Note — You can use the Search function of Acrobat Reader (File→Search) to find a term in a PDF of this document. To refine your search, use appropriate search options (for example, search for whole words only or enable case-sensitive searching). You can also search for a term in multiple PDFs at once. For more information, see the Help for Acrobat Reader.

5620 SAM documentation suite

The 5620 SAM documentation suite describes the 5620 SAM and the associated network management of its supported devices. Contact your Alcatel-Lucent support representative for information about specific network or facility considerations.

Table 1 lists the documents in the 5620 SAM documentation suite.

Table 1 5620 SAM customer documentation suite

Guide	Description
5620 SAM core documentation	
5620 SAM Planning Guide	The *5620 SAM Planning Guide* provides information about 5620 SAM scalability and recommended hardware configurations.

(1 of 4)

Guide	Description
5620 SAM | 5650 CPAM Installation and Upgrade Guide	The *5620 SAM | 5650 CPAM Installation and Upgrade Guide* provides OS considerations, configuration information, and procedures for the following: • installing, upgrading, and uninstalling 5620 SAM and 5650 CPAM software in standalone and redundant deployments • 5620 SAM system migration to a different system • conversion from a standalone to a redundant 5620 SAM system
5620 SAM User Guide	The *5620 SAM User Guide* provides information about using the 5620 SAM to manage the service-aware IP/MPLS network, including GUI basics, commissioning, service configuration, and policy management. The *5620 SAM User Guide* uses a task-based format. Each chapter contains: • a workflow that describes the steps for configuring and using the functionality • detailed procedures that list the configurable parameters on the associated forms 5620 SAM management information specific to LTE network elements is covered in the *5620 SAM LTE ePC User Guide* and *5620 SAM LTE RAN User Guide*. 5620 SAM management information specific to 1830 PSS network elements is covered in the *5620 SAM Optical User Guide*.
5620 SAM Parameter Guide	The *5620 SAM Parameter Guide* provides: • parameter descriptions that include value ranges and default values • parameter options and option descriptions • parameter and option dependencies • parameter mappings to the 5620 SAM-O XML equivalent property names There are dynamic links between the procedures in the *5620 SAM User Guide* and the parameter descriptions in the *5620 SAM Parameter Guide*. See Procedure 2 for more information. Parameters specific to LTE network elements are covered in the *5620 SAM LTE Parameter Reference*. Parameters specific to 1830 PSS network elements are covered in the *5620 SAM Optical Parameter Reference*.
5620 SAM Statistics Management Guide	The *5620 SAM Statistics Management Guide* provides information about how to configure performance and accounting statistics collection and how to view counters using the 5620 SAM. Network examples are included.
5620 SAM Scripts and Templates Developer Guide	The *5620 SAM Scripts and Templates Developer Guide* provides information that allows you to develop, manage, and execute CLI-based or XML-based scripts or templates. The guide is intended for developers, skilled administrators, and operators who are expected to be familiar with the following: • CLI scripting, XML, and the Velocity engine • basic scripting or programming • 5620 SAM functions

5620 SAM Troubleshooting Guide	The *5620 SAM Troubleshooting Guide* provides task-based procedures and user documentation to:
	• help resolve issues in the managed and management networks
	• identify the root cause and plan corrective action for:
	  • alarm conditions on a network object or customer service
	  • problems on customer services with no associated alarms
	• list problem scenarios, possible solutions, and tools to help check:
	  • network management LANs
	  • network management platforms and operating systems
	  • 5620 SAM client GUIs and client OSS applications
	  • 5620 SAM servers
	  • 5620 SAM databases

(2 of 4)

Guide	Description
5620 SAM Maintenance Guide	The *5620 SAM Maintenance Guide* provides procedures for: • generating baseline information for 5620 SAM applications • performing daily, weekly, monthly, and as-required maintenance activities for 5620 SAM-managed networks
5620 SAM Integration Guide	The *5620 SAM Integration Guide* provides procedures to allow the 5620 SAM to integrate with additional components.
5620 SAM System Architecture Guide	The *5620 SAM System Architecture Guide* is intended for technology officers and network planners to increase their knowledge of the 5620 SAM software structure and components. It describes the system structure, software components, and interfaces of the 5620 SAM. In addition, 5620 SAM fault tolerance, security, and network management capabilities are discussed from an architectural perspective.
5620 SAM Supervision Module User Guide	The *5620 SAM Supervision Module User Guide* provides information about how to configure and use the web-based 5620 SAM Supervision Module for fault management and at-a-glance network element monitoring.
5620 SAM Network Element Compatibility Guide	The *5620 SAM Network Element Compatibility Guide* provides release-specific information about the compatibility of managed device features in 5620 SAM releases.
5620 SAM Release Description	The *5620 SAM Release Description* provides information about the new features associated with a 5620 SAM software release.
5620 SAM Glossary	The *5620 SAM Glossary* defines terms and acronyms used in all of the 5620 SAM documentation, including 5620 SAM LTE documentation.
5620 SAM XML OSS Interface Developer Guide	The *5620 SAM XML OSS Interface Developer Guide* provides information that allows you to: • use the 5620 SAM XML OSS interface to access network management information • learn about the information model associated with the managed network • develop OSS applications using the packaged methods, classes, data types, and objects necessary to manage 5620 SAM functions
5620 SAM LTE documentation	
5620 SAM LTE ePC User Guide	The *5620 SAM LTE ePC User Guide* describes how to discover, configure, and manage LTE ePC devices using the 5620 SAM. The guide is intended for LTE ePC network planners, administrators, and operators. Alcatel-Lucent recommends that you review the entire *5620 SAM LTE ePC User Guide* before you attempt to use the 5620 SAM in your LTE network.
5620 SAM LTE RAN User Guide	The *5620 SAM LTE RAN User Guide* describes how to discover, configure, and manage the eNodeB using the 5620 SAM. The guide is intended for LTE RAN network planners, administrators, and operators. Alcatel-Lucent recommends that you review the entire *5620 SAM LTE RAN User Guide* before you attempt to use the 5620 SAM in your LTE network.
5620 SAM LTE Parameter Reference	The *5620 SAM LTE Parameter Reference* provides a list of all LTE ePC and LTE RAN parameters supported in the 5620 SAM.
5620 SAM LTE Alarm Reference	The *5620 SAM LTE Alarm Reference* provides a list of LTE ePC and LTE RAN alarms that can be reported in the 5620 SAM GUI.
5620 SAM 3GPP OSS Interface Developer Guide	The *5620 SAM 3GPP OSS Interface Developer Guide* describes the components and architecture of the 3GPP OSS interface to the 5620 SAM. It includes procedures and samples to assist OSS application developers to use the 3GPP interface to manage LTE devices.
5620 SAM 3GPP OSS Interface Compliance Statements	The *5620 SAM 3GPP OSS Interface Compliance Statements* document describes the compliance of the 5620 SAM 3GPP OSS interface with the 3GPP standard.
5620 SAM LTE RAN Release Description	The *5620 SAM LTE RAN Release Description* provides information about the LTE RAN features associated with the release.

(3 of 4)

Guide	Description
5620 SAM optical documentation	
5620 SAM Optical User Guide	The *5620 SAM Optical User Guide* describes how to discover, configure, and manage optical devices using the 5620 SAM. The guide is intended for optical network planners, administrators, and operators. Alcatel-Lucent recommends that you review the entire *5620 SAM Optical User Guide* before you attempt to use the 5620 SAM in your network.
5620 SAM Optical Parameter Reference	The *5620 SAM Optical Parameter Reference* provides a list of all optical device parameters supported in the 5620 SAM.
5620 SAM Optical Alarm Reference	The *5620 SAM Optical Alarm Reference* provides a list of optical device alarms that can be reported in the 5620 SAM GUI.

(4 of 4)

Procedure 1 To find the 5620 SAM user documentation

The user documentation is available from the following sources:

- the User_Documentation directory on the product DVD-ROM
- Help→5620 SAM User Documentation in the 5620 SAM client GUI main menu

Note — Users of Mozilla browsers may receive an error message when using the User Documentation Index page (index.html) to open the PDF files in the 5620 SAM documentation suite. The offline storage and default cache values used by the browsers are the cause of the error message.

Alcatel-Lucent recommends changing the offline storage (Mozilla Firefox) or cache (Mozilla 1.7) values to 100 Mbytes to eliminate the error message.

Procedure 2 To view parameter descriptions from the *5620 SAM User Guide*

You can click on a parameter name in a *5620 SAM User Guide* procedure to open the matching parameter description in the *5620 SAM Parameter Guide*. Ensure the following conditions are true beforehand:

- the *5620 SAM Parameter Guide* and *5620 SAM User Guide* are located in the same directory
- Adobe Reader Release 5.0 or later is installed

1 To view a parameter description when both the *5620 SAM User Guide* and the *5620 SAM Parameter Guide* are open in Adobe Acrobat, click on the parameter name in the *5620 SAM User Guide*.

The parameter description is displayed in the *5620 SAM Parameter Guide*.

2 To view a parameter description when only the *5620 SAM User Guide* is open in Adobe Acrobat:

i Click on a parameter name in a procedure in the *5620 SAM User Guide*. The *5620 SAM User Guide* closes and the *5620 SAM Parameter Guide* opens to display the parameter description.

ii Double-click on the Previous View button in Adobe Acrobat (or press Alt + ←) to re-open the *5620 SAM User Guide*. The *5620 SAM User Guide* opens and displays the parameter from step i.

Prerequisites

Readers of the 5620 SAM documentation suite are assumed to be familiar with the following:

- 5620 SAM software structure and components
- 5620 SAM GUI operations and tools
- typical 5620 SAM management tasks and procedures
- device and network management concepts

Conventions

Table 2 lists the conventions that are used throughout the documentation.

Table 2 Documentation conventions

Convention	Description	Example
Key name	Press a keyboard key	Delete
Italics	Identifies a variable	*hostname*

(1 of 2)

Convention	Description	Example
Key+Key	Type the appropriate consecutive keystroke sequence	CTRL+G
Key–Key	Type the appropriate simultaneous keystroke sequence	CTRL–G
*	An asterisk is a wildcard character, which means “any character” in a search argument.	log_file*.txt
↵	Press the Return key	↵
—	An em dash indicates there is no information.	—
→	Indicates that a cascading submenu results from selecting a menu item	Policies→Alarm Policies

(2 of 2)

Procedures with options or substeps

When there are options in a procedure, they are identified by letters. When there are substeps in a procedure, they are identified by Roman numerals.

Example of options in a procedure

At step 1, you can choose option a or b. At step 2, you must do what the step indicates.

1 This step offers two options. You must choose one of the following.

- **a** This is one option.
- **b** This is another option.

2 You must perform this step.

Example of substeps in a procedure

At step 1, you must perform a series of substeps within a step. At step 2, you must do what the step indicates.

1 This step has a series of substeps that you must perform to complete the step. You must perform the following substeps.

- **i** This is the first substep.
- **ii** This is the second substep.
- **iii** This is the third substep.

2 You must perform this step.

Measurement conventions

Measurements in this document are expressed in metric units and follow the Système international d’unités (SI) standard for abbreviation of metric units. If imperial measurements are included, they appear in brackets following the metric unit.

Table 3 lists the measurement symbols used in this document.

Table 3 Bits and bytes conventions

Measurement	Symbol
bit	b
byte	byte
kilobits per second	kb/s

Important information

The following conventions are used to indicate important information:

Warning — Warning indicates that the described activity or situation may, or will, cause equipment damage or serious performance problems.

Caution — Caution indicates that the described activity or situation may, or will, cause service interruption.

Note — Notes provide information that is, or may be, of special interest.

Contents

Preface **ix**

5620 SAM documentation suite ix
Procedure 1 To find the 5620 SAM user documentation xii
Procedure 2 To view parameter descriptions from the 5620 SAM User Guide xiii
Prerequisites xiii
Conventions xiii
Procedures with options or substeps xiv
Measurement conventions xiv
Important information xv

Introduction

1 — LTE RAN overview **1-1**

1.1 LTE RAN overview 1-2
1.2 About this guide 1-2
LTE RAN customer documentation 1-3
1.3 Alcatel-Lucent LTE RAN product suite 1-3
9452 WPS 1-3
9400 NEM 1-3
9459 NPO 1-3
9958 WTA 1-3

2 — LTE ePC and RAN management using the 5620 SAM 2-1

2.1 5620 SAM LTE NE management solution overview 2-2
5620 SAM 2-3
5620 SAM LTE RAN 2-3
5620 SAM LTE ePC 2-4
5620 SAM LTE 3GPP reference points 2-5
2.2 Supported 5620 SAM LTE NE management functions 2-6
2.3 5620 SAM LTE RAN management workflow 2-6

3 — 5620 SAM LTE RAN features 3-1

3.1 New for 5620 SAM Release 8.0 3-2

LTE RAN device configuration and discovery

4 — LTE RAN configuration management 4-1

4.1 Configuration management overview 4-2
4.2 Self-configuration 4-2
4.3 Offline configuration 4-3
4.4 Online configuration 4-3
4.5 OSSI support for eNodeB configuration management 4-3
Interface structure 4-4
Multiple-interface OSS design 4-4

5 — eNodeB NE configuration and discovery 5-1

5.1 eNodeB discovery and configuration overview 5-2
eNodeB discovery 5-2
IPv6 support 5-3
5.2 eNodeB discovery and management workflow 5-3
5.3 eNodeB commissioning 5-5
5.4 eNodeB self-configuration 5-5
Self-configuration policies 5-5
Pre-provisioned NE instances 5-5
The self-configuration process flow 5-6
Self-configuration procedures 5-6
Procedure 5-1 To create or modify an NE self-configuration policy 5-7
Procedure 5-2 To create or modify a pre-provisioned NE instance 5-9
5.5 eNodeB discovery 5-12
eNodeB discovery procedures 5-12
Procedure 5-3 To configure the 5620 SAM to communicate with the eNodeB using SNMPv3 5-12
Procedure 5-4 To create a discovery rule for eNodeB management by the 5620 SAM 5-14
Procedure 5-5 To view and sort the deployment status of pre-provisioned NE instances 5-17

Procedure 5-6 To run the self-configuration process flow for a pre-provisioned NE instance that has a status of Detected Node 5-18
Procedure 5-7 To manage the discovery of an eNodeB..... 5-18
Unidentified eNodeBs..... 5-19
Procedure 5-8 To enter a value for an unset id parameter for an eNodeB..... 5-20
5.6 eNodeB SSH sessions 5-20

6 — eNodeB offline configuration 6-1

6.1 Offline configuration overview..... 6-2
Workorders 6-2
Activation sessions and the activation manager..... 6-2
Configuration snapshots..... 6-3
6.2 Offline configuration workflow 6-3
6.3 Activation manager 6-3
WO import..... 6-3
Configuration locks 6-4
Running an activation session 6-4
Activation manager procedures..... 6-4
Procedure 6-1 To create an activation session 6-5
Procedure 6-2 To deploy a WO by using the activation manager..... 6-5
6.4 Configuration snapshots..... 6-9
Configuration snapshot procedures 6-10
Procedure 6-3 To create a snapshot instance..... 6-10
Procedure 6-4 To take a configuration snapshot 6-11
Procedure 6-5 To schedule a configuration snapshot..... 6-12
6.5 WO and configuration snapshot file management 6-14
File management procedures 6-15
Procedure 6-6 To configure WO and configuration snapshot file management on the 5620 SAM main server 6-15

7 — eNodeB online configuration 7-1

7.1 Online configuration overview 7-2
Logical object view 7-2
eNodeB parameters 7-3
7.2 ENB Equipment and eNodeB NE instance objects 7-5
ENB Equipment and eNodeB NE instance property forms..... 7-5
ENB Equipment and eNodeB NE instance procedures..... 7-6
Procedure 7-1 To open an ENB Equipment properties form 7-6
Procedure 7-2 To open an eNodeB NE instance property form 7-6
Procedure 7-3 To lock or unlock an eNodeB 7-7
7.3 Bulk operations 7-8
7.4 Logical objects manager 7-8
Logical objects manager procedures..... 7-8
Procedure 7-4 To access and modify objects with the logical objects manager 7-8
7.5 9400 NEM support 7-9
9400 NEM launch procedures 7-9
Procedure 7-5 To launch the 9400 NEM from the 5620 SAM client GUI..... 7-10

LTE RAN management

8 — RAN licensing 8-1

8.1 RAN licensing overview 8-2
8.2 RAN licensing workflow 8-2
8.3 5620 SAM RAN license manager 8-3
RAN license manager procedures 8-4
Procedure 8-1 To import a RAN license file by using the RAN license manager 8-4
Procedure 8-2 To configure RAN license file reporting 8-5
Procedure 8-3 To view the current RAN license file information 8-5
Procedure 8-4 To generate a RAN license report 8-6
8.4 eNodeB feature and capacity activation 8-6
Enumerated entitlements 8-6
Feature entitlements 8-6
Capacity entitlements 8-7
Feature and capacity activation procedures 8-7
Procedure 8-5 To configure capacity entitlement token consumption on an eNodeB 8-7
Procedure 8-6 To configure enumerated entitlement token consumption on an eNodeB 8-8
Procedure 8-7 To configure feature entitlement token consumption on an eNodeB 8-9

9 — LTE RAN EPS path management 9-1

9.1 EPS path topology map overview 9-2
EPS path topology map window 9-2
EPS path topology map panel 9-3
Zoom in and out using a mouse 9-3
EPS path topology map toolbar 9-4
EPS path topology map management procedures 9-5
Procedure 9-1 To open the EPS path topology map 9-6
Procedure 9-2 To view EPS path topology map elements 9-6
Procedure 9-3 To save a map view to a file 9-7
Procedure 9-4 To zoom in and zoom out of a map 9-8
Procedure 9-5 To view and modify EPS path information 9-9
9.2 EPS peers and paths 9-9
EPS peers 9-10
EPS paths 9-10
Procedures 9-10
Procedure 9-6 To view the properties of EPS peers from the EPS Peers and Paths form 9-11
Procedure 9-7 To view the properties of EPS paths from the EPS Peers and Paths form 9-12
9.3 5620 SAM network topology maps 9-13

10 — LTE RAN security 10-1

10.1 Overview 10-2
10.2 5620 SAM user and group security 10-2
Scope of command roles 10-2
10.3 eNodeB IPsec 10-2
IPsec procedures 10-3
Procedure 10-1 To enable or disable IPsec on an eNodeB 10-3
Procedure 10-2 To create or modify an eNodeB IPsec profile 10-4

11 — LTE RAN SON management 11-1

11.1 Overview 11-2
3GPP self-organizing network 11-2
11.2 Workflow 11-2
11.3 ANR 11-3
ANR procedures 11-3
Procedure 11-1 To enable or disable the ANR feature for an eNodeB 11-3
Procedure 11-2 To create or modify an ANR profile 11-4
Procedure 11-3 To redistribute an ANR policy to assigned eNodeBs 11-6
Procedure 11-4 To manually reset ANR on an eNodeB 11-6
Procedure 11-5 To configure ANR status and neighboring cell relations by using online configuration 11-7
11.4 PCI 11-8
PCI procedures 11-8
Procedure 11-6 To enable or disable PCI on an eNodeB 11-9
Procedure 11-7 To configure PCI on an eNodeB 11-10

LTE RAN maintenance

12 — LTE RAN device maintenance 12-1

12.1 Overview 12-2
12.2 Workflow for LTE RAN maintenance 12-2
12.3 NE maintenance preparation 12-2
Network preparation 12-3
Software upgrades 12-3
Network preparation procedures 12-3
Procedure 12-1 To assign a password to the samadmin user 12-4
12.4 eNodeB backup and restore 12-4
Backup and restore procedures 12-5
Procedure 12-2 To create or modify a RAN backup/restore policy 12-6
Procedure 12-3 To delete a backup/restore policy 12-8
Procedure 12-4 To configure the 5620 SAM to save RAN device configuration backups on a file system 12-8
Procedure 12-5 To perform an immediate eNodeB backup or restore 12-9
Procedure 12-6 To restore a device configuration backup other than the most recent 12-11

12.5 eNodeB software upgrades 12-11
eNodeB software upgrade policies 12-12
eNodeB software images 12-12
eNodeB software upgrade procedures 12-12
Procedure 12-7 To create an eNodeB software upgrade policy 12-13
Procedure 12-8 To import an eNodeB software image into the 5620 SAM 12-15
Procedure 12-9 To perform an immediate software upgrade on an eNodeB 12-15
Procedure 12-10 To monitor software upgrade status 12-17
Procedure 12-11 To delete an eNodeB software image from the 5620 SAM server 12-17
12.6 eNodeB component replacement 12-18
Sample workflow for an eNodeB RUC/fan tray replacement 12-18
Sample workflow for an eNodeB eCCM-U replacement 12-19

13 — LTE RAN statistics 13-1

13.1 Overview 13-2
13.2 Workflow 13-2
13.3 eNodeB performance management statistics 13-2
Statistics collection overview 13-2
Viewing eNodeB performance management statistics 13-4
RAN performance management statistics procedures 13-4
Procedure 13-1 To create or modify an eNodeB performance management policy 13-4
Procedure 13-2 To set the performance management maximum SNMP block size for an eNodeB 13-6
Procedure 13-3 To view eNodeB object statistics 13-6
13.4 LTE statistics configuration 13-7
LTE PM statistics catch-up 13-7
LTE PM statistics synchronization 13-7
Statistics configuration procedures 13-8
Procedure 13-4 To enable performance management statistics catch-up on the 5620 SAM 13-8
Procedure 13-5 To configure PM statistics synchronization on a redundant installation of the 5620 SAM 13-9

14 — LTE RAN troubleshooting 14-1

14.1 Overview 14-2
14.2 Event logging 14-2
Event logging procedures 14-2
Procedure 14-1 To view the events log for an eNodeB 14-2
Procedure 14-2 To configure the event log policy for an eNodeB 14-3
Procedure 14-3 To purge the statistics records 14-3
14.3 Device configuration and database troubleshooting 14-4
Configuration misalignment 14-4
Database fallback 14-4
Database corruption 14-5
Configuration and database troubleshooting procedures 14-5

Procedure 14-4 To reconfigure an eNodeB database configuration 14-6
Procedure 14-5 To resynchronize an eNodeB database configuration 14-7
14.4 Call trace 14-8
Call-trace scheduled tasks 14-9
Alarms 14-9
Statistics 14-9
Security 14-10
Data collection and storage 14-10
Call-trace management procedures 14-11
Procedure 14-6 To configure global 5620 SAM call-trace operation 14-11
Procedure 14-7 To configure local eNodeB call-trace operation 14-12
Procedure 14-8 To create a call-trace session using the global call-trace management form 14-12
Procedure 14-9 To create a call-trace session using an eNodeB instance properties form 14-13
Procedure 14-10 To activate a call-trace session 14-15
Procedure 14-11 To deactivate a call-trace session 14-15
Procedure 14-12 To delete a call-trace session 14-16
Procedure 14-13 To create a call-trace scheduled task 14-17
Procedure 14-14 To control call-trace scheduled task execution 14-18
Procedure 14-15 To manage the assignment of eNodeBs to call-trace auxiliary-server pairs 14-18

Appendices

A. eNodeB PM statistics counters A-1

A.1 eNodeB PM statistics counters A-2
A.2 eNodeB interface statistics A-83

Introduction

1 — LTE RAN overview

2 — LTE ePC and RAN management using the 5620 SAM

3 — 5620 SAM LTE RAN features

1 — LTE RAN overview

1.1 LTE RAN overview *1-2*

1.2 About this guide *1-2*

1.3 Alcatel-Lucent LTE RAN product suite *1-3*

1.1 LTE RAN overview

The LTE RAN is the next generation of wireless broadband technology as outlined by the 3GPP and is the radio access component of the LTE solution. The eNodeB is the key NE of the LTE RAN and is the physical radio link between UE and the LTE ePC network. The eNodeB provides functions that include radio resource management, interfaces between eNodeB NEs and to ePC NEs, IP header compression, and bearer level control. The 5620 SAM is the OAM system that manages the eNodeB.

For more information about the LTE RAN and the role of the eNodeB in the Alcatel-Lucent LTE solution, see the *Alcatel-Lucent 9400 | Release LAx.x RAN Overview 418-000-012*.

1.2 About this guide

The *5620 SAM LTE RAN User Guide* describes the various 5620 SAM GUI functions that are specific to eNodeB discovery, configuration, management, and maintenance. This guide also provides information about how the 5620 SAM interacts with other products in the Alcatel-Lucent LTE solution.

This guide does not provide descriptions or procedures for functions that apply only to non-LTE RAN devices, or descriptions of general 5620 SAM processes such as using the GUI or configuring the 5620 SAM client application. See the *5620 SAM User Guide* for more information about the general functions of the 5620 SAM and how to use the 5620 SAM to manage non-LTE NEs.

This guide contains the following volumes:

- Introduction—contains general LTE RAN information that includes the following:
  - an overview of the LTE RAN and the LTE product suite in the context of the 5620 SAM
  - an overview of the interaction between the LTE RAN and LTE ePC in the context of the 5620 SAM
  - feature lists by release
- LTE RAN device configuration and discovery—contains information about discovering and configuring the eNodeB by using the 5620 SAM, such as the following:
  - eNodeB self-configuration
  - device discovery
  - offline configuration
  - online configuration
- LTE RAN management—contains information about eNodeB management tasks that can be performed by using the 5620 SAM, such as the following:
  - RAN feature and capacity licensing
  - topology and path management
  - security configuration including user security and IPsec
  - SON management including ANR and PCI functions

- LTE RAN maintenance—contains information about eNodeB maintenance, statistics, and troubleshooting tasks that can be performed by using the 5620 SAM, such as the following:
  - backup/restore
  - software upgrade
  - performance management statistics
  - troubleshooting including events logging, eNodeB database reconfiguration, and call trace
- Appendices—contains reference information about the eNodeB

LTE RAN customer documentation

See the *Alcatel-Lucent 9400 | Release LAx.x Customer Documentation Overview 418-000-010* for more information about the customer documentation in the Alcatel-Lucent LTE solution.

1.3 Alcatel-Lucent LTE RAN product suite

The Alcatel-Lucent LTE solution features several products that are designed to configure and optimize the RAN in conjunction with the 5620 SAM. The following products described in the following subsections interface with the 5620 SAM to facilitate RAN configuration and management.

9452 WPS

The 9452 WPS creates CM XML files called WOs. You can use a WO to configure the eNodeB by using the 5620 SAM to activate the WO and deploy XML configuration changes over NetConf. You can use the 9452 WPS to create a new WO, or import a configuration snapshot from the 5620 SAM to use as a WO template.

9400 NEM

The 9400 NEM configures eNodeB parameters without the requirement for OAM software. You can use the 9400 NEM to commission and configure the eNodeB.

9459 NPO

The 9459 NPO provides QoS information and cartographic tools for evaluating network performance and planning network expansion. You can use the 9459 NPO to optimize the LTE RAN by creating CM XML files in conjunction with the 9452 WPS. You must use the 5620 SAM to provide the 9459 NPO with updated network data by scheduling a daily configuration snapshot.

9958 WTA

The 9958 WTA is an analytic tool that is designed to perform post-processing on 3GPP-compliant call-trace data gathered by the 5620 SAM from the eNodeB and 9471 MME.

2 — LTE ePC and RAN management using the 5620 SAM

2.1 5620 SAM LTE NE management solution overview *2-2*

2.2 Supported 5620 SAM LTE NE management functions *2-6*

2.3 5620 SAM LTE RAN management workflow *2-6*

2.1 5620 SAM LTE NE management solution overview

The 5620 SAM LTE NE management solution focuses on the equipment, configuration, fault, and state management of the ePC NEs, LTE interfaces, and mobile services that are used for mobile backhaul.

The 5620 SAM LTE NE management solution also supports the correlation of the LTE interfaces and mobile services with the underlying network transport layer to provide enhanced multi-layer monitoring and troubleshooting capabilities.

The 5620 SAM LTE NE management solution is comprised of the following components:

- 5620 SAM
- 5620 SAM LTE ePC
  - 7750 MG SGW
  - 7750 MG PGW
  - 9471 MME
  - 5780 DSC
- 5620 SAM LTE RAN (also referred to as the eUTRAN)
  - eNodeB

Figure 2-1 shows the 5620 SAM LTE NEs components and EPS interfaces that are managed in a typical LTE network.

Figure 2-1 5620 SAM LTE NE components and EPS interfaces

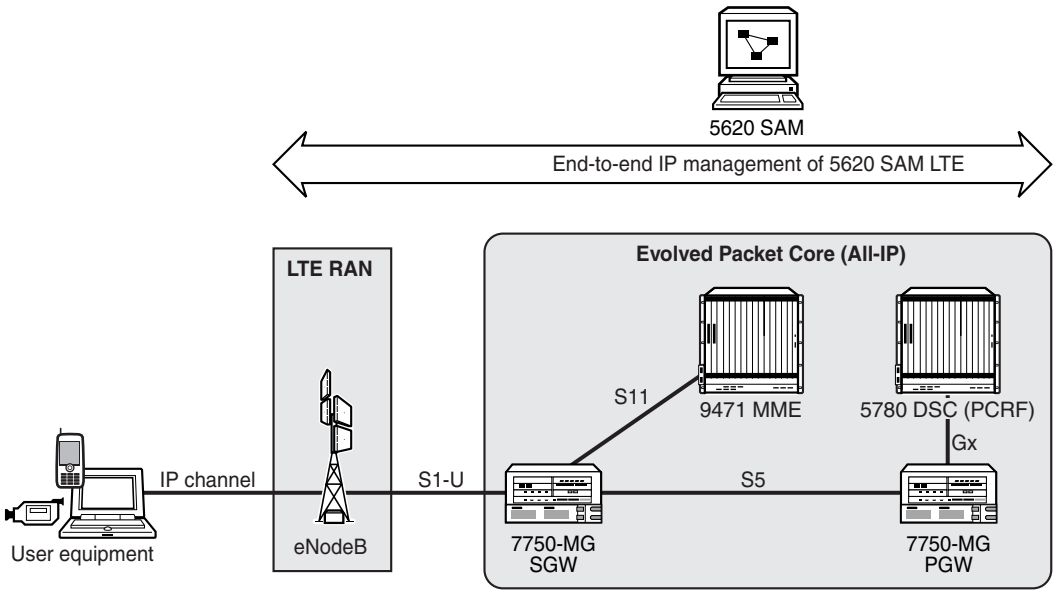

5620 SAM

The Alcatel-Lucent 5620 SAM enables integrated element, network and service-aware management of the products within the ePC and extends to RAN network devices, providing operators with end-to-end IP management within the eUTRAN, backhaul and core networks. The 5620 SAM manages both the mobile layer (bearers, QoS of traffic flows, GTP/PMIP tunnels) and the underlying transport layer attributes (bandwidth, pseudowires, LSPs) to provide cross-layer coordination and correlation.

The 5620 SAM also features enhanced advanced monitoring and service assurance capabilities to simplify the management of IP/MPLS-based networks. In particular, its automated troubleshooting functionality integrates physical, network routing and service topologies to simplify the process of fault isolation, minimizing service interruptions and reducing the possibility of human error.

Through a powerful, standards-based OSS interface, the 5620 SAM provides open, standards-based interfaces that easily adapt to their existing OSS environments for faster and more cost-effective integration.

To further enhance their service assurance capabilities, mobile operators can deploy the 5620 SAM along with the Alcatel-Lucent 5650 Control Plane Assurance Manager, which enables operators to proactively assure network and service availability against control plane misconfigurations, malfunctions and undetected routing updates. The 5650 CPAM offers real-time control plane visualization, proactive control plane surveillance, configuration validation and control plane diagnosis. In addition, by seamlessly integrating with the 5620 SAM, the Alcatel-Lucent 5650 CPAM gives carriers unprecedented manageability by unifying service, routing, MPLS and physical infrastructure management.

5620 SAM LTE RAN

The 5620 SAM LTE RAN focuses on the discovery, configuration, and management of RAN devices such as the eNodeB. The 5620 SAM provides an end-to-end management solution of the all-IP LTE domain by managing RAN UE access points in addition to the ePC mobile backhaul.

eNodeB

The eNodeB is an enhanced BTS system for UE access to the LTE RAN network and LTE services in the 700 MHz spectrum. The core component of the eNodeB is the 9926 Alcatel-Lucent BBU, which is a converged product for W-CDMA, CDMA, and LTE in FDD and TDD. The 9926 BBU is referred to as the 9412 eNodeB when in compact form for LTE with integrated TRDUs, and when in distributed form with LTE-enabled remote radio heads (RRH). This guide generically refers to the 9926 BBU and 9412 eNodeB as the eNodeB in singular, and as eNodeB NEs in plural.

The eNodeB provides the user plane and control plane protocol terminations for user equipment. The eNodeB uses the S1-MME interface to connect to the 9471 MME, the S1-U interface to connect to the 7750 MG SGW, and the X2 interface to connect to other eNodeB NEs.

Table 2-1 lists the eNodeB releases supported by the 5620 SAM.

Table 2-1 Supported eNodeB releases

eNodeB release	Technology
eNodeB LA2.0	FDD
eNodeB TLA2.1	TDD
eNodeB LA3.0 (LA3.0.0, LA3.0.1, and LA3.0.2)	FDD
eNodeB TLA3.0	TDD

The 5620 SAM displays the following physical components in the equipment tree:

- eNodeB (NE)
- D2U (shelf level)
- CB (eCCM with GigEMDA)
- BB (eCEM)
- RRH
- antenna port
- TRDU
- FRU

5620 SAM LTE ePC

The 5620 SAM LTE ePC is an all-IP mobile core network for the LTE, and is a converged framework for packet-based real-time and non-real-time services. LTE is end-to-end all-IP: from mobile handsets and other terminal devices with embedded IP capabilities, over IP-based eNodeB, across the ePC and throughout the application domain. See the *5620 SAM LTE ePC User Guide* for more information about managing LTE ePC devices with the 5620 SAM.

The 5620 SAM LTE ePC is comprised of the following four components, each of which is defined by 3GPP standards.

7750 MG SGW

The 7750 MG SGW is a data plane element in the LTE network whose primary function is to manage user-plane mobility, and act as a demarcation point between the 5620 SAM RAN and the core network.

7750 MG PGW

The 7750 MG PGW is the termination point of the packet data interface towards the PDN. The 7750 MG PGW, which is the anchor point for sessions towards the external PDN, supports:

- policy enforcement, such as operator-defined rules for resource allocation and usage
- packet filtering, such as deep packet inspection for application type detection
- charging support, such as per-URL charging

9471 MME

The 9471 MME performs the signaling and control functions to manage the UE access to network connections, the assignment of network resources, and the management of the mobility states to support tracking, paging, roaming, and handovers. The 9471 MME controls all control-plane functions that are related to subscriber and session management. The 9471 MME supports the following functions:

- security procedures—end-user authentication as well as initiation and negotiation of ciphering and integrity protection algorithms
- terminal-to-network session handling—signaling procedures that are used to set up packet data context and negotiate associated parameters such as QoS
- idle terminal location management—tracking the area update process that is used to allow the network to join terminals for incoming sessions

5780 DSC

The Alcatel-Lucent 5780 DSC is a carrier-grade platform that provides the Policy and Charging Rules Function for 3G packet core and 4G evolved packet core networks according to the 3GPP Release 7 and 8 specifications.

The 5780 DSC allows service providers to manage and control network behavior based on their business rules, application requirements, network status, and subscriber entitlement and preferences. After these decisions are implemented, they are instantiated and enforced in the network as a set of network policies.

The 5780 DSC supports the following functions:

- provides the dynamic link between the data and user layer, and the application and subscriber layer
- authorizes the network connections and flow, and determines charging information
- determines and binds the required QoS policy
- determines the flow and charging rules during UE connections, including detection and policy control
- accepts AF requests for media components and charging
- notifies the AF about network events
- provides roaming support of the ePC solution
- allows operator control of subscription support, service assurance, and charging

5620 SAM LTE 3GPP reference points

LTE reference points, as shown in Figure 2-1, are based on the 3GPP standards and are created automatically when LTE peer devices are signaled. The following peers and reference points are supported in the 5620 SAM:

- eNodeB to 7750 MG SGW (S1-U)
- 7750 MG SGW to 7750 MG PGW (S5)
- 7750 MG SGW to 9471 MME (S11)

- 7750 MG PGW to 5780 DSC (Gx)
- 7750 MG PGW or 7750 MG SGW to CCF (Rf)

2.2 Supported 5620 SAM LTE NE management functions

The Alcatel-Lucent 5620 SAM, along with the 5650 CPAM, provides comprehensive element and end-to-end IP management for the Alcatel-Lucent ePC NEs, LTE interfaces, and mobile services that are used for mobile backhaul.

Table 2-2 lists the 5620 SAM LTE NE management functions that are supported by the 5620 SAM.

Table 2-2 LTE management functions supported by the 5620 SAM

LTE NE management support	Discovery and mediation	Equipment	Configuration	Performance	State	Fault and alarm
5620 SAM LTE ePC (see the *5620 SAM LTE ePC User Guide*)						
7750 MG SGW	✓	✓	✓	✓	✓	✓
7750 MG PGW	✓	✓	✓	✓	✓	✓
9471 MME	✓	✓		✓	✓	✓
5780 DSC	✓	✓			✓	✓
5620 SAM LTE RAN						
eNodeB	✓	✓	✓	✓	✓	✓

2.3 5620 SAM LTE RAN management workflow

The following workflow is a high level process overview that describes the LTE RAN management capabilities of the 5620 SAM.

1. Commission eNodeB NEs; see chapter 5.
2. Discover and configure eNodeBs by using self-configuration; see chapter 5.
3. Configure eNodeB NEs by using offline configuration; see chapter 6.
   - a. Create workorders using the 9452 WPS.
   - b. Deploy WOs to eNodeBs.
   - c. Manage configuration snapshots.
4. Configure eNodeB NEs by using online configuration; see chapter 7.
   - a. Configure eNodeB objects by using the 5620 SAM GUI or OSS application.
   - b. Configure eNodeB objects by launching the 9400 NEM via the 5620 SAM client application.

5. Manage RAN feature and capacity licensing; see chapter 8.
6. Manage EPS paths and network topology; see chapter 9.
7. Manage LTE RAN security; see chapter 10.
   - a. Configure user accounts for RAN operators and assign roles as required.
   - b. Create and modify eNodeB IPsec profiles and apply them to eNodeB NEs.
8. Manage LTE RAN SON functions; see chapter 11.
   - a. Configure the ANR function for eNodeB NEs.
   - b. Configure the PCI function for eNodeB NEs.
9. Perform maintenance tasks; see chapter 12.
   - a. Backup and restore RAN devices as required.
   - b. Upgrade RAN device software.
   - c. Manage eNodeB component replacement tasks.
10. Manage LTE RAN statistics collection and analysis; see chapter 13.
    - a. Configure server-side settings for LTE RAN performance management statistics collection.
    - b. Configure eNodeB performance management policies.
    - c. Plot eNodeB statistics by using the historical plotting function of the 5620 SAM.
11. Troubleshoot RAN devices; see chapter 14.
    - a. Monitor eNodeB events by using the event logging function.
    - b. Troubleshoot connection and path problems by using the call trace function.
    - c. Troubleshoot eNodeB NE database problems:
      - i. Reconfigure eNodeBs to overwrite incorrect or corrupted device database configurations.
      - ii. Resynchronize eNodeBs with the 5620 SAM to accept device database configurations.
    - d. Respond to alarms and perform corrective actions.

3 — 5620 SAM LTE RAN features

3.1 New for 5620 SAM Release 8.0 *3-2*

3.1 New for 5620 SAM Release 8.0

Table 3-1 lists the features and function added in the 5620 SAM Release 8.0.

Table 3-1 5620 SAM Release 8.0 LTE RAN features

Device	Feature or function description	Reference for more information
Release 8.0 R8 LTE RAN features		
eNodeB support	**9400 NEM support** The 5620 SAM supports enhanced cross-launching of the 9400 NEM from the 5620 SAM client application GUI.	See chapter 7 for more information about the 9400 NEM.
	RAN license enhancement The 5620 SAM supports the configuration of enumerated license entitlement.	See chapter 8 for more information about RAN licensing
	Device database and configuration troubleshooting The 5620 SAM supports the troubleshooting of eNodeB configuration misalignment, fallback, and database corruption errors.	See chapter 14 for more information about eNodeB troubleshooting
Release 8.0 R7 LTE RAN features		

(1 of 2)

Device	Feature or function description	Reference for more information
eNodeB support	**Configuration management** The 5620 SAM supports manual and automated configuration of the eNodeB in conjunction with the 9452 Wireless Provisioning System (WPS).	See chapter 4 for information about eNodeB configuration management.
	eNodeB discovery, management, and configuration The 5620 SAM supports discovery and management of the eNodeB, and configuration via offline and online configuration.	See chapters 5, 6, and 7 for information about eNodeB discovery and configuration.
	RAN license management The 5620 SAM supports the management of RAN capacity license entitlements by using the RAN license manager.	See chapter 8 for information about LTE RAN licenses and the RAN license manager.
	eNodeB Security The 5620 SAM supports IPsec configuration for the eNodeB and provides network administration security, including user role definitions for specific functions of the 5620 SAM.	See chapter 10 for information about eNodeB security management.
	SON support The 5620 SAM supports configuration and management of the ANR and PCI functions of the SON.	See chapter 11 for information about SON configuration and management.
	Performance management The 5620 SAM supports the ability to retrieve and plot eNodeB statistics as a graph using the 5620 SAM statistics plotter. The plotter provides a numerical value for each point on the graph.	See chapter 13 for information about retrieving eNodeB statistics.
	Troubleshooting support The 5620 SAM supports eNodeB alarm management and call trace function.	See chapter 14 for information about eNodeB troubleshooting.

(2 of 2)

LTE RAN device configuration and discovery

4 — LTE RAN configuration management

5 — eNodeB NE configuration and discovery

6 — eNodeB offline configuration

7 — eNodeB online configuration

4 — LTE RAN configuration management

4.1 Configuration management overview *4-2*

4.2 Self-configuration *4-2*

4.3 Offline configuration *4-3*

4.4 Online configuration *4-3*

4.5 OSSI support for eNodeB configuration management *4-3*

4.1 Configuration management overview

Configuration management is defined as operator-driven configuration of LTE RAN NEs, such as the eNodeB. The 5620 SAM provides operators with the following methods for performing configuration management on the eNodeB:

- self-configuration
- offline configuration
- online configuration

4.2 Self-configuration

Self-configuration is a key feature of the 3GPP SON specification for RAN device self-organization. Self-configuration streamlines and automates the process of adding large numbers of eNodeBs to the 5620 SAM network. Self-configuration of RAN devices with the 5620 SAM requires the completion of the following steps:

1. The creation of one or more WOs for device configuration, based on a pre-planned vision of the deployed RAN.
2. The automatic or manual creation of pre-provisioned NE instances that contain the configuration data of the WOs described in the previous step.
3. The creation of a mediation security policy that specifies the transport protocols that are used to communicate with the devices.
4. The creation of one or more self-configuration policies that specify the steps followed by the self-configuration process flow during device discovery.
5. The creation of a discovery rule that incorporates the mediation security and self-configuration policies, in addition to rule elements that specify eNodeB IP addresses or subnets.
6. The activation of the discovery rule in order to trigger active scanning of specified IP ranges.
7. The automatic association between pre-provisioned NE instances and newly discovered devices in order to activate of the self-configuration process flow for the appropriate devices.
8. The execution of the self-configuration process flow, which may include device software upgrade/downgrade, configuration deployment, and administrative enabling of the device.
9. The successful resynchronization of eNodeB NEs with the 5620 SAM.

WO creation is ideally performed well in advance of eNodeB commissioning by using the 9452 WPS. The 5620 SAM can activate a WO containing hundreds of RAN devices and use the contained configuration data to automatically create an equivalent number of pre-provisioned NE instances.

See section 5.4 for more information about self-configuration.

4.3 Offline configuration

Offline configuration is the process of using an application that is external to the 5620 SAM in order to create network configuration templates that can be deployed to the 5620 SAM network.

Operators can use the 9452 WPS to create CM XML configuration files (WOs), importing the WO files into the 5620 SAM, and deploying the WO files to eNodeBs in order to create or modify eNodeB MIM parameters. Conversely, can use the 5620 SAM to generate configuration snapshot files that can be imported into the 9452 WPS and converted into WO files. Configuration snapshots are also used to provide the 9459 NPO with updated network data.

See chapter 6 for more information about offline configuration.

4.4 Online configuration

Online configuration is the process of using the 5620 SAM GUI to configure eNodeB parameters individually, or in groups by using the logical objects manager. Online configuration also includes the use of OSS interfaces to configure the eNodeB, and eNodeB NE configuration by using the 9400 NEM.

See chapter 7 for more information about online configuration.

4.5 OSSI support for eNodeB configuration management

The 5620 SAM provides OSS support for eNodeB configuration management via the 5620 SAM-O, the 3GPP-compliant 5620 SAM-O CORBA interface, and through dedicated files on the 5620 SAM server file system.

Table 4-1 describes the interfaces and supported functions for eNodeB configuration management over OSSI.

Table 4-1 CM interfaces and supported functions

Interface	CM inventory	CM provisioning	Fault management	Performance management
5620 SAM-O	✓	✓	✓	✓
5620 SAM-O CORBA	✓		✓	
PM statistics file				✓
CM configuration snapshot file	✓	✓		

Interface structure

The 5620 SAM uses the following interfaces to communicate with OSS applications for LTE RAN management:

- 5620 SAM-O XML
  - Real-time notification (JMS)
  - Push/pull (HTTP)
- 3GPP 5620 SAM-O CORBA
  - Real-time notification (JacORB)
  - Push/pull (JacORB)
- 3GPP performance management files
- eNodeB configuration snapshot files

See Figure 4-1 for more information about the OSSI structure for LTE RAN management.

Figure 4-1 LTE RAN OSS interface structure

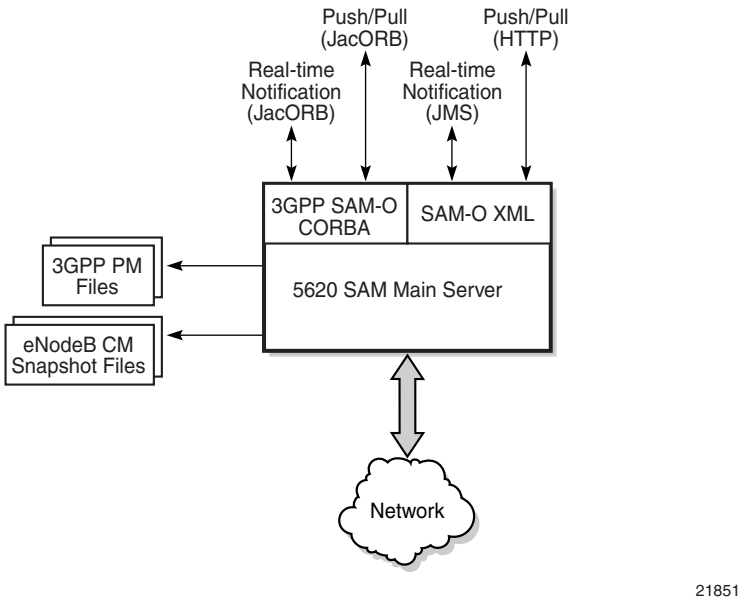

Multiple-interface OSS design

Developing an OSS application that interacts with multiple interfaces may require additional effort and complicate the OSS design. Alcatel-Lucent strongly recommends that OSS architects carefully consider whether the OSS should interact with more than one interface.

5 — eNodeB NE configuration and discovery

5.1 eNodeB discovery and configuration overview *5-2*

5.2 eNodeB discovery and management workflow *5-3*

5.3 eNodeB commissioning *5-5*

5.4 eNodeB self-configuration *5-5*

5.5 eNodeB discovery *5-12*

5.6 eNodeB SSH sessions *5-20*

5.1 eNodeB discovery and configuration overview

This section is an overview of the configuration tasks that are required to discover, manage, and configure an eNodeB using the 5620 SAM.

eNodeB discovery

The 5620 SAM uses SNMP to discover NEs by scanning the network according to user-specified IP addresses or IP ranges. Discovery rules contain the rule elements that specify which IP addresses or ranges are included or excluded in the discovery process. When the 5620 SAM discovers an NE, it sets the NE status to Managed and adds the device properties to the 5620 SAM database.

The 5620 SAM can discover and configure eNodeB NEs by using self-configuration. Self-configuration facilitates RAN management by providing an automated process for full NE configuration that immediately follows successful NE discovery and management. See section 5.4 for information about self-configuration.

See the *5620 SAM User Guide* for more information about NE discovery and management.

eNodeB site ID

The 5620 SAM uses a string value, instead of a management or system IP address, to represent an eNodeB in the network. This string ID is the value of the id parameter of the ENBEquipment object. The ENBEquipment object is the root of the NetConf tree that contains the parameters and properties of the eNodeB MIM.

The 5620 SAM classifies eNodeBs without a value entered for the ENBEquipment id object as unidentified nodes and stops the discovery process. Perform Procedure 5-8 to enter an identifying value for unidentified nodes and allow the discovery to proceed.

Note 1 — The value of the id property of the ENBEquipment object must be unique because the 5620 SAM uses this value to identify the eNodeB in the network.

Note 2 — You must unmanage and remanage an eNodeB if you change the ENBEquipment id value after device discovery by the 5620 SAM.

Note 3 — The id property is the 5620 SAM equivalent of the uniqueName parameter in the eNodeB MIM. It is used to identify objects for operator use and for PM reporting. It must be set by the 9400 NEM.

IPv6 support

You can use the 5620 SAM to configure an eNodeB for IPv6 management. Before you can enable IPv6 on eNodeB NEs, you must perform the following tasks:

- Plumb and enable an IPv6 interface on each 5620 SAM main server station. See the appropriate OS documentation for information about configuring IPv6 interfaces.
- Configure the 5620 SAM to manage devices using IPv6 in the server installer. See the *5620 SAM | 5650 CPAM Installation and Upgrade Guide* for more information about enabling IPv6 support by using the 5620 SAM installer. A reinstallation of the 5620 SAM is not required.
- See the *Alcatel-Lucent 9400 | Release LAx.x Migration to IPv6 (Telecom and/or OAM) Procedure 418-000-052* for more information about configuring IPv6 on eNodeB NEs for management and traffic.

Contact Alcatel-Lucent technical support for more information about configuring the 5620 SAM to manage eNodeB NEs using IPv6.

5.2 eNodeB discovery and management workflow

The following workflow lists the high-level steps that are required to prepare an eNodeB for discovery, configure the 5620 SAM to discover the eNodeB, and perform basic management tasks.

1 Commission eNodeBs by using the 9400 NEM to configure the alpha and beta parameters required for the 5620 SAM to discover and manage the device.

2 Establish static routes from the 5620 SAM and LTE RAN servers to eNodeBs and eNodeB subnets, as required.

3 Create an SNMPv3 user that corresponds to the hard-coded user parameters in the eNodeB.

4 Create one or more mediation security policies and associate the SNMPv3 eNodeB user with each policy.

5 Create WOs using the 9452 WPS.

6 Discover eNodeBs and configure the devices by using self-configuration, as required.

- **i** Manually create pre-provisioned NE instances to serve as placeholders for undiscovered eNodeBs.
- **ii** Associate WOs with pre-provisioned NE instances.
- **iii** Create WOs, transfer them to the 5620 SAM and use the activation manager to create pre-provisioned NE instances, as required.
- **iv** Modify the parameters of pre-provisioned NE instances manually, or by deploying WOs with the activation manager, as required.

v Create self-configuration policies to specify the level of operator involvement in the configuration process at the moment an eNodeB is discovered.

vi Create a discovery rule for self-configuration that contains:

- a self-configuration policy
- a pre-provisioned NE instance
- an eNodeB-specific mediation security policy
- rule elements that contain eNodeB IP addresses

vii Scan the network according to the discovery rules.

viii Check the discovery, self-configuration, software upgrade, management, and synchronization status of the NEs.

7 Discover the eNodeBs and configure them using offline or online configuration (without self-configuration), as required.

i Create discovery rules for offline or online configuration that contain:

- the eNodeB mediation security policy
- rule elements that contain eNodeB IP addresses

ii Scan the network according to the discovery rules.

iii Check the discovery, self-configuration, software upgrade, management, and synchronization status of the NEs.

iv Deploy WOs to discovered eNodeBs using the activation manager, as required.

v Use the logical objects manager and properties forms to configure eNodeB parameters by using online configuration, as required.

8 Manage RAN discovery and configuration, as required:

- Modify the discovery rules.
- Add or modify the rule elements.
- Enable, disable, or remove the discovery rules.
- Scan the network as needed according to a discovery rule.
- Synchronize NEs with the 5620 SAM database.
- Manage or unmanage eNodeBs, as required.
- Fine-tune eNodeB configuration by deploying WOs to eNodeBs by using the activation manager, as required.
- Use configuration snapshots to capture existing eNodeB configuration data to use with the 9452 WPS to create new WOs.
- Schedule a recurring daily configuration snapshot to provide CM data to the NPO.

5.3 eNodeB commissioning

Commissioning of the eNodeB requires the configuration of alpha and beta parameters in the SNMP MIB by using the 9400 NEM. Commissioning is generally performed by on-site technicians with an LMT. Parameters that are not configured are set to their factory defaults.

Note — A static route must be configured if the eNodeB is in a different subnet than the 5620 SAM.

5.4 eNodeB self-configuration

Alcatel-Lucent recommends self-configuration as the method for discovering and configuring eNodeBs for management by the 5620 SAM. Procedures 5-1 and 5-2 describe the steps required to manually create self-configuration policies and pre-provisioned NE instances. See chapter 6 for more information about automatically creating pre-provisioned NE instances by activating a WO.

Self-configuration policies

Self-configuration policies determine the stages of the process flow followed by the 5620 SAM for eNodeBs that are identified as candidates for self-configuration. You can configure the 5620 SAM to perform, skip, or pause for operator intervention at one or more stages. The self-configuration process flow includes the stages listed below.

- The application of software upgrades as specified in the NE self-configuration policy and associated RAN software upgrade policy.
- The deployment of the configuration data contained by the pre-provisioned NE instance with an automatically created activation session.
- Setting the administrative state of successfully configured eNodeBs to Up.

Perform Procedure 5-1 to create or modify a self-configuration policy. Perform Procedure 5-6 to manually run the self-configuration process flow.

Pre-provisioned NE instances

Pre-provisioned NE instances are placeholder NE templates that contain the configuration data that can be deployed to an eNodeB upon discovery. When you use the activation manager to activate an NE WO that creates an ENBEquipment object with an identifier that does not match any existing pre-provisioned or discovered eNodeBs, the 5620 SAM automatically creates a corresponding pre-provisioned NE instance. This function helps to facilitate LTE RAN pre-provisioning.

Perform Procedure 5-2 to manually create or modify a pre-provisioned NE instance.

Note — Configuration deployment overwrites the existing NetConf tree on the eNodeB. Prior device configuration will be lost.

The self-configuration process flow

The self-configuration process flow is a series of configurable actions, specified in an NE self-config policy, that are taken by the 5620 SAM when an appropriate eNodeB is discovered. When the 5620 SAM discovery control matches a newly discovered eNodeB with a pre-provisioned NE instance, the state of the pre-provisioned NE instance changes from Awaiting Node to Detected Node.

When the pre-provisioned NE instance is configured for Auto Start, the process flow starts automatically. When no checkpoints are selected, the process flow runs to completion without operator intervention. When one or more checkpoints are selected, the process flow requires operator intervention. Perform Procedure 5-6 to run the self-configuration process flow manually.

Note 1 — An eNodeB that is set to a locked state by the activation manager can only be configured or modified by the corresponding activation session.

Note 2 — eNodeBs that are manually set to a locked state can only be configured or modified after the state of the eNodeB is set to unlocked by a 5620 SAM operator.

During the SW Upgrade stage of the process flow, the 5620 SAM verifies whether the software version specified in the pre-provisioned NE instance and self-configuration policy match the software version of the newly discovered eNodeB. If the software version of the eNodeB is lower than the specified version, then the 5620 SAM automatically reconfigures the SFTP target of the eNodeB and initiates a software update. If the software version in the eNodeB is higher than the software version specified by the pre-provisioned NE instance and self-configuration policy, the 5620 SAM raises a software version mismatch alarm.

During the Configuration Deployment stage of the process flow, the 5620 SAM deploys the parameter configuration specified in the pre-provisioned NE instance that corresponds to the newly discovered eNodeB.

The Administrative Enable stage of the process flow is when the 5620 SAM sets the administrative state of the newly discovered eNodeB to Up and performs a full resynchronization of the device. The 5620 SAM changes the eNodeB state to Managed and raises an informational alarm to notify operators of a successful self-configuration event.

Self-configuration procedures

Perform the following procedures to configure the policies and objects required for eNodeB self-configuration in the 5620 SAM network. See the *5620 SAM Parameter Guide* for descriptions of the parameters in the following procedures.

Procedure 5-1 To create or modify an NE self-configuration policy

Self-configuration of the eNodeB by the 5620 SAM requires the creation of both an NE self-configuration policy and a pre-provisioned NE instance.

1. Choose Administration→NE Self Config Policy Manager from the 5620 SAM main menu. The NE Self Config Policy Manager form opens.
2. Perform one of the following:
   - **a** To create an NE self-configuration policy, click on the Create button. The NE Self Config Policy (Create) form opens. Go to step 3.
   - **b** To modify an existing NE self-configuration policy:
     - **i** Configure the filter criteria, if required, and click on the Search button to generate a list of self-configuration policies.
     - **ii** Choose an NE self-configuration policy from the list and click on the Properties button. The NE Self Config Policy (Edit) form opens. Go to step 3.
3. Enter a name for the NE self-configuration policy in the Name field.
4. Click on the Select button for the Node Type and choose a device from the list.
5. Verify and modify the settings in the following check boxes of Process Flow panel, as required:
   - Auto Start
   - SW Upgrade—enabling this parameter will display the Software Upgrade panel.
   - Configuration Deployment
   - Administrative Enable
6. Verify and modify the settings in the following check boxes for the Checkpoints Before panel, as required:
   - SW Upgrade
   - Configuration Deployment
   - Administrative Enable
7. Perform one of the following:
   - **a** If the SW Upgrade check box is selected and the Software Upgrade panel is displayed, go to step 8.
   - **b** If the SW Upgrade check box is not selected and the Software Upgrade panel does not display, go to step 10.

8 Perform one of the following:

a Choose a RAN node software upgrade policy:

i Click on the Select button for the Policy ID in the Software Upgrade panel. The Select RAN Node Software Upgrade Policy form opens.

ii Configure the filter criteria, if required, and click on the Search button to generate a list of RAN node software upgrade policies.

iii Choose a RAN node software upgrade policy from the list and click on the OK button to return to the NE Self Config Policy form. Go to step 9.

b Create a RAN node software upgrade policy:

i Click on the Select button for the Policy ID in the Software Upgrade panel. The Select RAN Node Software Upgrade Policy form opens.

ii Perform Procedure 12-7.

iii Configure the filter criteria, if required, and click on the Search button to generate a list of RAN node software upgrade policies.

iv Choose a RAN node software upgrade policy from the list and click on the OK button to return to the NE Self Config Policy form. Go to step 9.

9 Choose a software image:

i Click on the Select button for the Software Release in the Software Upgrade panel. The Select Software Image form opens.

Note — You must import a software image by performing Procedure 12-8 before you can choose a software image.

ii Choose a software image from the list and click on the OK button to return to the NE Self Config Policy form.

10 Click on the OK button to close the form and save the NE self-configuration policy. When you modify an existing NE self-configuration policy, a dialog box appears. Click on the Yes button to close the dialog box.

11 Close the NE Self Config Policy Manager form.

Procedure 5-2 To create or modify a pre-provisioned NE instance

Perform this procedure to manually create or modify a pre-provisioned NE instance on the 5620 SAM. Perform Procedure 6-2 to automatically create a pre-provisioned NE instance by deploying a WO.

1 Choose Administration→Pre-Provisioned NE Manager from the 5620 SAM main menu. The Pre-Provisioned NE Manager form opens.

2 Perform one of the following:

   a To create a pre-provisioned NE instance, click on the Create button. The Pre-Provisioned NE form opens with the General tab displayed. Go to step 3.

   b To modify an existing pre-provisioned NE instance:

      i Configure the filter criteria, if required, and click on the Search button to generate a list of pre-provisioned NE instances.

      ii Choose a pre-provisioned NE instance from the list and click on the Properties button. The Pre-Provisioned NE form opens with the General tab displayed. Go to step 7.

3 Configure the Network Element ID parameter.

Note — The Network Element ID parameter is used as the identifier for an eNodeB in the network. The Network Element ID of a pre-provisioned NE instance must match the ENBEquipment value of the corresponding eNodeB for the two to be matched in the network upon discovery by the 5620 SAM.

4 Click on the Select button for the Network Element Type and choose an eNodeB type from the drop-down menu.

5 Click on the Select button for the Network Element Version and choose a version from the drop-down menu.

6 Choose a chassis type from the Chassis Type drop-down menu.

7 Click on the Options tab button.

8 Enter the active management IP address for the eNodeB in the Active Management IP field.

9 Enter the unique hardware identifier for the eNodeB in the Hardware Identifier field.

Note — The 5620 SAM uses the Hardware Identifier and Active Management IP parameters to help identify an eNodeB and resolve potential conflicts in the network.

10 Perform one of the following:

a If you have a eNodeB software upgrade policy that you need to use as a software upgrade override or you need to create one, go to step 11.

b If you do not need to use a software upgrade override for this pre-provisioned NE instance, go to step 15.

11 Perform one of the following:

a Choose an eNodeB software upgrade policy:

i Click on the Select button in the Software Upgrade Override panel. The Select Software Upgrade Policy form opens.

ii Configure the filter criteria, if required, and click on the Search button to generate a list of eNodeB software upgrade policies.

iii Choose an eNodeB software upgrade policy from the list and click on the OK button to return to the Pre-Provisioned NE form. Go to step 12.

b Create an eNodeB software upgrade policy:

i Click on the Select button in the Software Upgrade Override panel. The Select Software Upgrade Policy form opens.

ii Click on the Create button.

iii Perform Procedure 12-7.

iv When the new eNodeB software upgrade policy is created successfully, go to step 12.

12 Click on the Select button for the Image. The Select Software Image form opens.

13 Configure the filter criteria, if required, and click on the Search button to generate a list of eNodeB software images.

14 Choose a software image from the list and click on the OK button to close the form and return to the Pre-Provisioned NE form.

15 Click on the Apply button.

The pre-provisioned NE instance is saved and created in the network. The 5620 SAM creates the Pre-Provisioned NEs group is created if the group does not already exist. The form refreshes to display additional tabs.

Note — The 5620 SAM raises a warning alarm when you save a pre-provisioned NE instance without associating an NE WO.

16 Perform one of the following:

a Associate an NE WO with the pre-provisioned NE instance.

i Click on the Activation tab button.

ii Click on the Select button. The Select NE Work Order form opens.

Note — In order for an NE WO to appear in the Select NE Work Order form, the value for the Network Element ID parameter that you entered in this procedure and the string value of the ENBEquipment parameter in the NE WO must match.

iii Configure the filter criteria, if required, and click on the Search button to generate a list of applicable NE WOs.

iv Choose an NE WO from the list and click on the OK button to close the Select NE Work Order form. The 5620 SAM automatically creates and starts an activation session to apply the NE WO.

Note 1 — If an existing activation session is already using the WO, the pre-provisioned NE instance does not create an activation session or apply the WO.

Note 2 — If an activation session remains in the started state for more than 24 h without being completed by an operator, an alarm is raised in the 5620 SAM.

v Click on the Apply button to save the pre-provisioned NE instance. A dialog box appears.

vi Click on the Yes button to close the dialog box.

vii Close the Pre-Provisioned NE Manager form.

b Close the Pre-Provisioned NE form without associating an NE WO.

5.5 eNodeB discovery

Procedure 5-3 describes how to create a mediation security policy and an SNMPv3 user, which are required for eNodeB discovery by the 5620 SAM and for SNMP communication. Procedure 5-4 describes how to create a discovery rules for eNodeBs that are intended for self-configuration, and offline and online configuration. See the *5620 SAM Parameter Guide* for descriptions of the parameters in the following procedures.

eNodeB discovery procedures

Perform the following procedures to configure the policies and object required for eNodeB discovery, and to discover an eNodeB by using the 5620 SAM device discovery function.

Procedure 5-3 To configure the 5620 SAM to communicate with the eNodeB using SNMPv3

The following procedure describes the configuration of an SNMPv3 user and mediation policy intended specifically for 5620 SAM communication with the eNodeB. For information about configuring additional parameters in a mediation policy, see the Discovery Management chapter in the *5620 SAM User Guide*.

Note — The eNodeB requires specific settings to be configured in the 5620 SAM in order for SNMP communication to occur. A mediation security policy and an NE user intended specifically for eNodeB management must be created. The following conditions must be met:

- The username of the NE user specified in the mediation security policy is *initial_snm*.
- The password used in the password fields for the initial_snm user must match the password hard-coded on the eNodeB.
- The SNMP port is 161.
- The NetConf port is 830.
- The SNMP version is SNMPv3.

1 Create an NE user with SNMPv3 enabled on the 5620 SAM.

i Choose Administration→Security→NE User Configuration from the 5620 SAM main menu. The NE User Configuration form opens.

ii Click on the Create button. The NE User, Global Policy (Create) form opens with the General tab displayed.

iii Enter *initial_snm* in the User Name field.

iv Enter a value for the Additional ID parameter.

Note — You can create two or more NE users with identical values for the User Name parameter by setting the Additional ID parameter. This allows you to accommodate eNodeBs with specific NE user requirements, such as the type of privacy policy.

v Enter a description in the Description field, if required.

vi Select the snmp check box to enable SNMP for the user. The form refreshes to display the SNMPv3 tab.

vii Click on the SNMPv3 tab button.

viii Configure the parameters:

- Authentication Protocol
- Privacy Protocol

Note — The settings for the Authentication Protocol, Privacy Protocol, and associated password parameters must match the corresponding parameters on the eNodeB.

ix Configure the parameters, if required:

- New Authentication Password
- Confirm New Auth Password

x Configure the parameters, if required.

- New Privacy Password
- Confirm New Privacy Password

xi Click on the OK button to create the user and close the NE User form. The NE user that you created is displayed in the NE User (NE Security) list.

xii Close the NE User Configuration form.

2 Configure an SNMPv3 mediation security policy on the 5620 SAM.

i Choose Administration→Mediation from the 5620 SAM main menu. The Mediation (Edit) form opens with the General tab displayed.

ii Click on the Mediation Security tab button.

iii Click on the Create button to create a new mediation security policy. The Mediation Policy (Create) form opens.

iv Enter a name for the mediation policy in the Displayed Name field.

v Choose SNMPv3(USM) from the Security Model drop-down menu. The SNMPv3 panel is displayed.

vi In the SNMP panel, set the Port parameter to 161, if required.

vii In the SNMPv3 panel, click on the Select button for the SNMPv3 user. The Select User form opens.

viii Choose the NE user you created in step 1 and click on the OK button to close the Select User form.

ix In the File Transfer panel, configure the File Transfer Type by using the drop-down menu.

x If you selected FTP for the File Transfer Type parameter, configure the following parameters in the FTP panel:

- User Name
- User Password
- Confirm Password
- Connect Timeout (sec)
- Read Timeout (sec)

Note — In order to perform eNodeB software upgrades using the 5620 SAM, FTP or SFTP must be configured.

xi If you selected Secure for the File Transfer Type parameter, configure the following parameters in the SecureFTP panel:

- Connect Timeout (sec)
- Read Timeout (sec)

xii In the NETCONF panel:

- Enter *initial_snm* in the User Name field.
- Configure the User Password and Confirm Password fields.
- Enter 830 in the Port field, if required.

xiii Click on the OK button to close the Mediation (Create) form. A dialog box appears.

xiv Click on the OK button to close the dialog box.

xv Click on the OK button to close the Mediation (Edit) form and save the mediation security policy.

Procedure 5-4 To create a discovery rule for eNodeB management by the 5620 SAM

The 5620 SAM discovers devices by scanning the network as specified by the discovery rules. After a device is discovered, the 5620 SAM servers sets the device to a managed state and adds the device elements to the 5620 SAM database.

Follow the prompts provided to create a discovery rule intended for self-configuration, or offline/online configuration without self-configuration. For additional information about configuring discovery rules, see the Discovery Management chapter in the *5620 SAM User Guide*.

Note 1 — Discovery rules for self-configuration require specific settings that apply to self-configuration only.

Note 2 — An eNodeB can only be managed by one 5620 SAM server, or one set of redundant active and standby servers, at a time.

1. Choose Administration→Discovery Manager from the 5620 SAM main menu. The Discovery Manager (Edit) form opens with the Discovery Rules tab displayed.
2. Click on the Create button. The Create Discovery Rule form opens.
3. In the Specify General Attributes step, enter a description in the description field, if required.
4. Click on the Select button for the Group Name. The Select Discovery Group form opens.
5. Choose a group from the list and click on the OK button to close the form.

Note — The Pre-Provisioned NEs group does not display if no pre-provisioned NE instances exist. Perform Procedure 5-2 to create a pre-provisioned NE instance.

6. Click on the Management Protocol parameter and choose IPv4 or IPv6 from the list, as required.
7. Click on the Next button.
8. In the Add Rule Elements step, click on the Create button. The Topology Discovery Rule Element form opens.
9. Enter an eNodeB management IP address, or IP range, in the IP Address field and click on the Apply button to add the IP address to the list.
10. Replace the contents of the IP Address Field with a different IP address and click on the Apply button to add another eNodeB IP address or range, as required.
11. Repeat step 10 to add more eNodeB IP addresses to the list, as required.
12. Click on the OK button to close the dialog box.
13. Click on the Next button twice.
14. In the Configure Mediation Security step, click on the Select button in the Read Access Mediation Policy panel. The Configure Mediation Security form opens.
15. Choose the mediation security policy that you created in Procedure 5-3 and click on the OK button to close the form.
16. Click on the Select button in the Write Access Mediation Policy panel. The Configure Mediation Security form opens.

17 Choose the mediation security policy that you created in Procedure 5-3 and click on the OK button to close the form.

18 Click on the Select button in the Trap Access Mediation Policy panel. The Configure Mediation Security form opens.

19 Choose the mediation security policy that you created in Procedure 5-3 and click on the OK button to close the form.

20 Click on the Next button four times.

21 In the Configure Backup Policy step, click on the Select button for the Policy ID. The Select Backup Policy form opens.

22 Perform one of the following:

a Use the default RAN backup policy.

i Choose RAN Based Default Policy from the list.

ii Click on the OK button to close the Select Backup Policy form. Go to step 23.

b Use a customized RAN backup policy.

i Perform Procedure 12-2 to create a RAN backup policy, if required.

ii Choose a RAN backup policy from the list.

iii Click on the OK button to close the Select Backup Policy form. Go to step 23.

23 Click on the Next button.

24 In the Add NE Self Config Policies step, perform one of the following:

a If you are creating a discovery rule for self-configuration:

i Click on the Add button. The Select form opens.

ii Configure the filter criteria, if required, and click on the Search button to generate a list of NE self-configuration policies.

iii Choose the NE self-configuration policy that you created in Procedure 5-1 and click on the OK button to close the form.

Note — You can only choose one NE self-configuration policy for a device type.

iv Click on the Next button.

b If you are creating a discovery rule that will not be used to discover eNodeBs intended for self-configuration, go to step 25.

25 Click on the Finish button to close the Create Discovery rule form.

26 Click on the Apply button in the Discovery Manager form. A dialog box appears.

27 Click on the Yes button to close the dialog box. The discovery rule that you created in this procedure is saved and activated.

Note 1 — The discovery rule that you created in this procedure is not saved or activated until you click on the OK button or the Apply button in the containing Discovery Manager form and confirm the system changes.

Note 2 — Discovery rules that are shut down are not applied.

28 Perform the following, as required:

a Perform Procedure 5-6 to run the self-configuration process flow when the 5620 SAM discovers eNodeBs intended for self-configuration.

b Perform Procedure 5-7 to manage eNodeB discovery for online configuration.

Procedure 5-5 To view and sort the deployment status of pre-provisioned NE instances

Perform this procedure to sort pre-provisioned NE instances by their deployment status and access the Properties form of an instance. Perform Procedure 5-6 to run the self-configuration process flow of a pre-provisioned NE instance.

1 Choose Administration→Pre-Provisioned NE Manager from the 5620 SAM main menu. The Pre-Provisioned NE Manager form opens.

2 Click on the drop-down menu at the top left corner of the form and choose Pre-Provisioned NE Status (Self Config). The form refreshes and displays additional filter options.

3 Click on the Search button to display a list of pre-provisioned NE instances.

4 Configure the filter criteria in one or more columns of the main panel and click on the Search button to display a list of pre-provisioned NE instances based on the defined filter criteria.

5 Choose a pre-provisioned NE instance from the list and click on the Properties button. The Pre-Provisioned NE Status form opens.

6 Perform configuration tasks as required.

Procedure 5-6 To run the self-configuration process flow for a pre-provisioned NE instance that has a status of Detected Node

Perform this procedure to verify the discovery status of a pre-provisioned NE instance and run the configuration process flow when checkpoints are enabled on the instance.

Caution — The configuration deployment phase of self-configuration overwrites the entire eNodeB NetConf tree. You erase all prior configuration on the eNodeB when you run the self-configuration process flow.

Note — This procedure is required only when checkpoints are enabled in the self-configuration policy. The process flow runs automatically when checkpoints are not enabled.

1. Choose Administration→Pre-Provisioned NE Manager from the 5620 SAM main menu. The Pre-Provisioned NE Manager form opens.
2. Click on the drop-down menu at the top left corner of the form and choose Pre-Provisioned NE Status (Self Config). The form refreshes and displays additional filter options.
3. Click on the Search button to display a list of pre-provisioned NE instances.
4. Click on the drop-down menu for the State column of the main panel and choose Detected Node from the list.
5. Click on the Search button to display a list of pre-provisioned NE instances with a State of Detected Node.
6. Choose a pre-provisioned NE instance from the list and click on the Properties button. The Pre-Provisioned NE Status form opens.
7. Click on the Continue button to initiate a step of the process flow. A dialog box appears.
8. Select the check box to verify that you understand the implications of the action and click on the OK button. A check mark appears beside the step of the process flow that is now complete.
9. Repeat steps 7 and 8 until the process flow is complete.
10. Click on the OK button or Cancel button to close the Pre-Provisioned NE form.

Procedure 5-7 To manage the discovery of an eNodeB

Perform this procedure to discover devices by scanning the network, as specified in the discovery rules.

See the *5620 SAM User Guide* for more information about tasks you can perform with newly discovered devices.

1. Choose Administration→Discovery Manager from the 5620 SAM main menu. The Discovery Manager (Edit) form opens with the Discovery Rules tab displayed.
2. Click on the Managed State tab button. A list of discovered devices displays.
3. Configure the filter criteria, if required, and click on the Search button to generate a list of discovered devices.
4. Verify that eNodeBs are discovered and managed.
5. Perform the following steps, as required.
   - **a** Click on the Manage button to set unmanaged eNodeBs to managed.
   - **b** Performing Procedure 5-8 to set an identifier for unidentified eNodeBs, as required.
   - **c** Ping management IP addresses. See the *5620 SAM User Guide* for information about pinging managed devices.
6. Perform the following steps to move a discovered eNodeB from the Discovered NEs group to the Network group, as required.
   - **i** In the Physical Topology window, click on the Discovered NEs group. The Discovered NEs form opens.
   - **ii** Choose eNodeBs and drag and drop them to the network icon in the equipment view of the navigation tree or to the topology map.

Unidentified eNodeBs

The 5620 SAM uses the value of the ENBEquipment id parameter as the identifier for the device in the network. eNodeBs without a value entered for this parameter are not fully discovered by the 5620 SAM until a value is entered.

Perform Procedure 5-8 to enter a value for the id parameter of the ENBEquipment object.

Procedure 5-8 To enter a value for an unset id parameter for an eNodeB

The UnidentifiedNode alarm should be visible before performing this procedure.

1 Perform one of the following:

   a Use the UnidentifiedNode alarm to access the device.

      i Choose Window→Alarm Window from the 5620 SAM main menu.

      ii Right-click on the Unidentified Node alarm and choose Show Affected Object from the contextual menu. The Discovered Node form opens with the General tab displayed.

   b Use the discovery manager to access the device.

      i Choose Administration→Discovery Manager from the 5620 SAM main menu. The Discovery Manager form opens with the Discovery Rules tab displayed.

      ii Choose the discovery rule that caused the discovery of the unidentified device from the list and click on the Properties button. The Topology Discovery Rule form opens with the General tab displayed.

      iii Click on the Discovered Nodes tab button.

      iv Choose the unidentified device from the list and click on the Properties button. The Discovered Node form opens with the General tab displayed.

2 Enter a name for the eNodeB in the Network Element ID field.

3 Click on the OK button to close the Discovered Node form.

The eNodeB moves to the intended group in the equipment window. The 5620 SAM uses the value entered in step 2 as the identifier for the device.

5.6 eNodeB SSH sessions

The launching of SSH sessions to eNodeB NEs from the 5620 SAM GUI is intended for use by Alcatel-Lucent support personnel only. Alcatel-Lucent does not recommend using SSH sessions for customer configuration or troubleshooting of the eNodeB.

6 — eNodeB offline configuration

6.1 Offline configuration overview *6-2*

6.2 Offline configuration workflow *6-3*

6.3 Activation manager *6-3*

6.4 Configuration snapshots *6-9*

6.5 WO and configuration snapshot file management *6-14*

6.1 Offline configuration overview

Offline configuration is the process of using an external tool, such as the 9452 WPS, to create CM XML files and deploying the files to managed devices by using the 5620 SAM. A CM XML file created by the 9452 WPS is called a WO. You can deploy a WO to an eNodeB by using the activation manager function of the 5620 SAM.

See the *Alcatel-Lucent 9452 Wireless Provisioning System (WPS) | Release LAx.x WPS User Guide 418-000-201* for more information about using the 9452 WPS.

Workorders

A WO is a CM XML file with an extension of .xwo that creates or modifies eNodeB parameter objects when the file is deployed to the device by using the 5620 SAM. You can create new WOs by using the 9452 WPS. The WOs are transferred from the 9452 WPS system to the 5620 SAM server via FTP or a shared directory, depending on installation.

You can use WOs to comprehensively configure eNodeBs, or to modify specific parameters. You can also use the activation manager to create a pre-provisioned NE instance by activating a WO for which there is no corresponding discovered eNodeB.

See the example below for the XML structure of a WO.

Code 6-1: Sample WO and contained NE WO

```
<?xml version="1.0" encoding="UTF-8"?>
<workorders>
 <workorder name="sample NE WO" creationDate="2010-10-26 14:48:07.533
+0200" originator="admin" description="none">
 <ENBEquipment id="eNB101" model="ENB" version="LA_02_00"
method="create">
 <attributes>
 <userSpecificInfo> workorder content </userSpecificInfo>
 </attributes>
 </workorder>
</workorders>
```

Activation sessions and the activation manager

The activation manager is the function in the 5620 SAM for managing WO deployment. You can use the activation manager to perform the following tasks:

- validate WO files and detect errors
- acquire configuration locks on eNodeBs
- deploy WO files to eNodeBs
- fallback WO deployment to correct device or network errors that occur as a result of WO deployment
- schedule WO deployment within a 24 h time window

See section 6.3 for more information about using the activation manager.

Configuration snapshots

You can use configuration snapshots to capture CM XML snapshot files of eNodeB NE configurations in the 5620 SAM network. You can use configuration snapshot files for the following purposes:

- To reuse proven eNodeB NE configuration settings to create new WO files for deployment to other eNodeBs.
- To provide the 9459 NPO with up-to-date information on eNodeB configuration and status for planning and network optimization.
- To backup eNodeB gamma parameter configuration in conjunction with a backup/restore policy. See chapter 12 for more information about the backup/restore function of the 5620 SAM.

You must schedule a daily, recurring configuration snapshot of all managed eNodeBs in order to provide a complete image of the network to the NPO. See section 6.4 for more information about configuration snapshots.

6.2 Offline configuration workflow

1. Use the 9452 WPS to create WO files containing configuration data for eNodeBs and automatically or manually transfer WOs to the 5620 SAM server by using FTP.
2. Use the activation manager function of the 5620 SAM to validate and deploy WOs to eNodeBs.
3. Use the configuration snapshot function of the 5620 SAM to export eNodeB configuration data in the form of snapshot files.
4. Automatically or manually transfer snapshot files to the following application servers by using FTP:
   - i the 9452 WPS
   - ii the 9459 NPO
5. Use the 9452 WPS to convert snapshot files into WO templates.
6. Use the 9459 NPO to perform network planning and optimization tasks based on data in the imported configuration snapshots.

6.3 Activation manager

The activation manager is used by the 5620 SAM to apply WOs to eNodeBs. Before you can use the activation manager, you must create an activation session. The activation session can then be used by the activation manager to deploy WOs to eNodeBs. Perform Procedure 6-1 to create an activation session.

WO import

WOs in the 5620 SAM server are located in the *path*/activation/wo_import directory, where *path* is the 5620 SAM base directory.

The 5620 SAM polls the wo_import directory for new WOs once every five minutes, or each time that an operator clicks on the appropriate Search button in the activation manager. The 5620 SAM automatically adds new WOs as database objects for operator use.

Configuration locks

An activation session acquires a configuration lock for the target eNodeBs when an operator, or the 5620 SAM, starts the session. Configuration locks prevent any changes external to the activation session from being applied to the eNodeBs in order to prevent conflicts. Locks can be released when an operator terminates the activation session, in the Release stage, and by the auto-release function.

If two or more activation sessions try to acquire a lock on the same eNodeB, only the first lock attempt succeeds. Subsequent lock attempts by activation sessions display the lock status as Waiting.

Running an activation session

Once started, an activation session can be scheduled for automatic execution up to 24 hours in the future. Activation sessions waiting to be executed by the scheduler remain in the started state, and all associated eNodeBs remain locked until the session is finished.

Note — Only one WO can be associated with an activation session at a time. A WO can only be associated with one activation session at a time.

After an existing activation session is loaded into the activation manager, you can start the session to acquire device configuration locks and perform the following stages in sequence:

1. Setup: loads the WO and performs an XML sanity check.
2. Validation: runs validation checks on NE WOs.
3. Activation: deploys the NE WOs to the applicable eNodeBs.
4. Fallback: reverts configuration changes, if required, undoing the Activation stage.
5. Release: releases configuration locks.

At any stage in the activation process, you can view activation logs, validation errors, and the XML structure of the WO that is being deployed. Perform Procedure 6-2 to deploy a WO to an eNodeB by using the activation manager.

Activation manager procedures

Perform the procedures in this section to deploy WOs to discovered and managed eNodeBs using the activation manager, and to create pre-provisioned NE instances by activating WOs for which there is no corresponding discovered eNodeB. See the *5620 SAM Parameter Guide* for descriptions of the parameters in the following procedures.

Procedure 6-1 To create an activation session

Perform this procedure to create an activation session for use in deploying a WO with the activation manager.

1 Choose Manage→Mobile Access→Activation from the 5620 SAM main menu. The Activation form opens.

2 Click on the Create Activation Session button. The Activation Session (Create) form opens.

3 Configure the parameters:

- Name
- Description

4 Click on the OK button to save the activation session and close the Activation Session (Create) form.

Procedure 6-2 To deploy a WO by using the activation manager

Perform this procedure to deploy a WO and any contained NE WOs to the 5620 SAM network. You must have a 5620 SAM user account with an administrator or work order activation scope of command role in order to deploy a WO.

The following conditions must be true in order to deploy an NE WO:

- The NE WO matches a managed eNodeB, or it creates a sufficient set of objects to create a new pre-provisioned NE profile.
- The NE WO is in a supported CM XML format and does not contain model errors.
- The device version of the NE WO is supported by the 5620 SAM.
- The NE WO does not create objects that cause RAN license violations.
- The NE WO successfully passes the Validation stage of the activation process.

The activation manager requires an activation session in order to deploy a WO. If an activation session has not been created, then you must perform Procedure 6-1 and create an activation session before performing this procedure.

Caution — When you deploy a WO to a managed eNodeB, a full or partial reset of the device can occur, which is service-affecting.

1 Choose Manage→Mobile Access→Activation from the 5620 SAM main menu. The Activation form opens.

2 Configure the filter criteria, if required, and click on the Search button to generate a list of activation sessions.

3 Choose an activation session from the list and click on the Properties button. The Activation Session (Edit) form opens with the General tab displayed.

4 In the Associated Work Orders panel, click on the Add button. The Add form opens.

5 Configure the filter criteria, if required, and click on the Search button to generate a list of applicable WOs.

6 Choose a WO from the list, and click on the OK button to close the Add form and associate the WO with the current activation session.

Note — A WO that is associated with an activation session cannot be deleted from the session after the association has been made.

7 Click on the Activation tab button. The Setup stage is selected by default in the Stages panel. NE WOs are displayed as a list.

8 Complete the Setup stage of the activation session.

i Choose one or more NE WOs from the list and click on the Exclude button to exclude or re-include NE WOs from deployment, as required.

ii Click on the Start Session button to start the activation session. The 5620 SAM evaluates the model, impact, and device management status of each NE WO.

Note 1 — When an activation session starts, the 5620 SAM acquires configuration locks on managed eNodeBs that will be impacted by NE WO deployment. The 5620 SAM releases the configuration locks when an operator terminates the activation session.

Note 2 — NE WOs with CM Model errors are not passed into the Activation stage, and cannot be deployed.

Note 3 — The 5620 SAM raises an alarm if an activation session remains in the started state for more than 24 h.

iii Verify that the Completed Initialization message appears in the Stage column for each NE WO in the list.

iv Click on the Auto Release button to enable or disable automatic release of configuration locks at the end of the Activation stage, as required.

Caution — When you enable auto-release, the Fallback stage cannot be performed.

v Click on the Impact Results tab button and verify device impact, as required.

vi Click on the Logs tab button and view log messages, as required.

vii In the Stages panel, click on the Validation button. NE WOs that have successfully passed the Setup stage are displayed.

9 Complete the Validation stage of the activation session.

i Choose an NE WO from the list and click on the Validate button. To choose multiple NE WOs for simultaneous validation, hold down the Shift or CTRL keys while clicking on NE WOs.

ii Click on the Validation Results tab button.

iii Click on the Search button to display any errors and warnings associated with the NE WOs that have been validated. If no faults appear in the Validation Result panel, the NE WOs are valid.

Note 1 — Validation results are only displayed for NE WOs that have been validated.

Note 2 — You cannot deploy an NE WO if it has not been validated.

10 Click on the Schedule button to set WO deployment to be executed automatically, up to 24 h later, if required. See the *5620 SAM User Guide* for information about using the 5620 SAM scheduler.

11 Perform one of the following:

a If no serious errors are identified in NE WOs during the Validation stage, click on the Activation button in the Stages panel and go to step 12.

b If faults are identified in NE WOs during the Validation stage:

i Resolve the issue that is preventing WO deployment. The following actions are examples only.

- In the case of CM model errors, choose or create a WO that does not contain CM model errors by using the 9452 WPS.
- In the case of RAN license errors, perform Procedure 8-1 to import RAN license capacity into the 5620 SAM network.
- Exclude NE WOs, as required, and go to 12 to continue the activation process for valid NE WOs.

ii Click on the Terminate Session button to release the configuration locks.

iii Delete the current activation session.

iv Perform Procedure 6-1 to create a new activation session.

v Perform this procedure again.

12 Complete the Activation stage of the activation session.

Caution — The deployment of WOs to active devices may be service-affecting.

i Evaluate the possible consequences of WO deployment, including:

- full or partial device resets
- usage of RAN license capacity and feature entitlements
- validity of NE WOs and issues that may result from warnings
- available system resources of the 5620 SAM when there are numerous NE WOs
- impact of parameter changes
- service interruption
- auto-release and the inability to fallback after a configuration lock release occurs

ii Choose an NE WO from the list and click on the Activate button. To choose multiple NE WOs for simultaneous activation, hold down the Shift or CTRL keys while clicking on NE WOs.

iii Verify the messages as they appear in the Stage, Action, and Progress columns.

iv Click on the Logs tab button and view log messages, as required.

13 Perform one of the following.

a If you must undo the configuration changes that have been caused by the Activation stage, go to step 14 and perform the Fallback stage.

b If the Activation stage is successful and you want to finalize the configuration changes, go to step 15.

14 Complete the Fallback stage of the activation session, if required.

Caution — Fallback of WO deployment can be service-affecting.

Note 1 — Perform this step only if you need to undo the changes caused by the WO deployment and return the eNodeBs to their pre-existing configurations.

Note 2 — You cannot perform a fallback on an eNodeB once the configuration lock has been released.

i Choose an NE WO from the list and click on the Fallback button. To choose multiple NE WOs for simultaneous fallback, hold down the Shift or CTRL keys while clicking on NE WOs.

ii In the bottom half of the Activation Session form, click on the General tab button.

iii Verify that the fallback has been performed successfully.

iv Click on the Terminate Session button to release the configuration locks.

v Delete the current activation session to deploy another WO, if required.

vi Perform Procedure 6-1 to create another activation session, if required.

vii Repeat this procedure with a different WO, or exclude eNodeBs from the activation session as required.

15 Perform one of the following.

a If auto-release is enabled, go to step 17.

b If auto-release is disabled, go to step 16.

16 Complete the Release stage of the activation session.

i Verify that a fallback is not required.

ii Choose an NE WO from the list and click on the Release button. To choose multiple NE WOs for simultaneous release, hold down the Shift or CTRL keys while clicking on NE WOs.

iii Go to step 17.

17 Click on the Terminate Session button to end the activation session and release the configuration locks.

6.4 Configuration snapshots

Configuration snapshots are CM XML files with an extension of .xcm that are generated by the 5620 SAM to capture the parameter settings of one or more eNodeBs in the network. You can configure a snapshot instance to generate configuration snapshots of all parameters, or a specific subset of parameters. You can use configuration snapshots to capture the parameters of both managed eNodeBs and pre-provisioned NE instances.

To take a configuration snapshot, you must create a snapshot instance. Perform Procedure 6-3 to create a snapshot instance. You can use a snapshot instance to take configuration snapshots manually (see Procedure 6-4), or schedule a snapshot instance to take configuration snapshots at a later time, or on an ongoing basis. Perform Procedure 6-5 to schedule a snapshot instance to take configuration snapshots.

Configuration snapshots are stored in the *installation_directory*/activation/snapshot_export directory, where *installation_directory* is the 5620 SAM base directory.

You can use a configuration snapshot in conjunction with the 9452 WPS to convert a configuration snapshot into a WO. This facilitates eNodeB provisioning by allowing you to reuse proven device parameter settings and apply them to other eNodeBs or pre-provisioned NE instances via offline configuration. When creating a snapshot instance and configuration snapshots for export to the 9452 WPS, you must configure the snapshot instance specifically for that purpose. See Procedure 6-3 for more information.

The 9459 NPO requires daily configuration snapshots of the RAN as managed by the 5620 SAM. A daily snapshot provides the NPO with an updated representation of both the planned and currently managed RAN so that to NPO operators can successfully optimize device parameter settings for the 5620 SAM network. When creating a snapshot instance and configuration snapshots for export to the 9459 NPO, you must configure the snapshot instance specifically for that purpose. See Procedure 6-3 for more information.

Configuration snapshot procedures

Perform the following procedures to create snapshot instances and take configuration snapshots of eNodeB NE configuration.

Procedure 6-3 To create a snapshot instance

Perform this procedure to create a snapshot instance that is intended to do one of the following tasks:

- capture the configuration of all eNodeBs in the network, which is generally performed for use with the 9459 NPO
- capture the configuration of a single eNodeB, which is generally performed for use with the 9452 WPS
- capture the configuration of a subset of eNodeBs

1. Choose Manage→Mobile Access→Snapshot Instances from the 5620 SAM main menu. The Snapshot Manager form opens.

2. Click on the Create button. The Snapshot (Create) form opens with the General tab displayed.

3. Configure the parameters:

   - Snapshot Name
   - Description

4 Configure the parameters in the Filtering panel, as required:

Note — You must enable all of the parameters in the Filtering panel to take a configuration snapshot of all eNodeBs for use with the 9459 NPO. You must disable all of the parameters in the Filtering panel to take a configuration snapshot for use with the 9452 WPS.

- Include all Snapshot Entities in the Network
- Include Components and Attributes with Manufacturer Visibility
- Include States and Statuses
- Include Attributes with Read-Only access
- Include Additional Information Attributes

5 Perform one of the following:

a If Include all Snapshot Entities in the Network is enabled, go to step 10.

b If Include all Snapshot Entities is not enabled and you want to take a snapshot of a single eNodeB only, go to step 10.

c If Include all Snapshot Entities in the Network is not enabled and you want to take a snapshot of two or more eNodeBs, go to step 6 to add individual eNodeBs to the snapshot instance.

6 Click on the NE Entities tab button.

7 Click on the Add button. The Add form opens.

8 Configure the filter, if required, and click on the Search button to display a list of available eNodeBs.

9 Choose one or more eNodeBs from the list. To choose multiple eNodeBs, hold down the CTRL key and click on the eNodeBs. Click on the OK button to close the Add form.

10 Click on the OK button to create the snapshot instance and close the Snapshot form.

Procedure 6-4 To take a configuration snapshot

Perform this procedure to take a configuration snapshot of one or more discovered eNodeBs or pre-provisioned NE instances. Manually taken snapshots are generally used with the 9452 WPS.

1 Choose Manage→Mobile Access→Snapshot Instances from the 5620 SAM main menu. The Snapshot Manager form opens.

2 Configure the filter, if required, and click on the Search button to display a list of snapshot instances.

3 Choose a snapshot instance from the list and click on the Properties button. The Snapshot form opens with the General tab displayed.

4 Verify the settings of the snapshot instance, as required.

5 Click on the Extract File button. The state of the snapshot displays in the Snapshot State panel, including the following:

- the state of the last attempted snapshot (success or failure)
- the execution time of the last attempted snapshot
- the file name of the last successful snapshot

Procedure 6-5 To schedule a configuration snapshot

Perform this procedure to create a schedule for an existing snapshot instance. You can configure a snapshot to be taken once, or on an ongoing basis. See Procedure 6-3 for information about how to create a snapshot instance.

See the *5620 SAM User Guide* for more information about scheduling tasks by using the 5620 SAM scheduler. See the *5620 SAM Parameter Guide* for information about the scheduler parameters in this procedure.

Note — The 9459 NPO requires a configuration snapshot of all RAN devices in the network. Ensure that the Include All Snapshot Entities parameter is selected in the snapshot instance that you choose in step 3 of this procedure.

1 Choose Manage→Mobile Access→Snapshot Instances from the 5620 SAM main menu. The Snapshot Manager form opens.

2 Configure the filter, if required, and click on the Search button to display a list of snapshot instances.

3 Choose a snapshot instance from the list and click on the Properties button. The Snapshot form opens with the General tab displayed.

4 Click on the Schedule button. The STM Scheduled Task (Create) form opens.

5 Configure the following parameters:

- Scheduled Task Name
- Scheduled Task Description
- Administrative State

6 In the Schedule panel, click on the Select button. The Select Schedule form opens.

7 Perform one of the following:

a Create a daily, recurring schedule for use with the 9459 NPO.

i Click on the Create button. The SAM Schedule form opens with the General tab displayed.

ii In the Information panel, configure the following parameters:

- Name
- Description
- User Start Time

iii Select the Ongoing check box.

iv Choose Per Day from the Frequency drop-down menu.

v In the Frequency Settings panel, select the Run Every Day radio button.

vi Click on the OK button to save the schedule, close the form, and return to the Select Schedule form.

vii Choose the schedule you just created from the list and click on the OK button to close the form and return to the STM Scheduled Task form.

viii Click on the OK button to apply the schedule to the configuration snapshot instance, close the form, and return to the Snapshot form.

b Create an alternate schedule for the configuration snapshot.

i Click on the Create button. The SAM Schedule form opens with the General tab displayed.

ii In the Information panel, configure the following parameters:

- Name
- Description
- User Start Time

iii Configure the parameters:

- Ongoing
- Delay Time (seconds)
- Enable
- Frequency

iv Configure the parameters in the Frequency settings panel, if the Frequency parameter is set to a value other than Once, as required.

v Click on the OK button to save the schedule, close the form, and return to the Select Schedule form.

vi Choose the schedule you just created from the list and click on the OK button to close the form and return to the STM Scheduled Task form.

vii Click on the OK button to apply the schedule to the configuration snapshot instance, close the form, and return to the Snapshot form.

c Use an existing schedule.

i Choose a schedule from the list and click on the OK button.

ii Click on the OK button to apply the schedule to the configuration snapshot instance, close the form, and return to the Snapshot form.

8 Click on the OK button to save the changes and close the Snapshot form.

Note — You can modify the scheduling parameters of a configuration snapshot instance by clicking on the Scheduling tab button.

6.5 WO and configuration snapshot file management

The 5620 SAM manages WO and configuration snapshot files according to property settings that are specified in the nms-sever.xml configuration file. See Code 6-2 for a listing of the properties contained in the activation portion of the nms-server.xml file. The values listed below are the default values.

Code 6-2: Activation file management properties

```
 <activation numDbThreads="10"
snapshotExportsSyncEnabled="true"
snapshotExportsSyncInterval="60"
snapshotExportsDaysToKeep="7"
snapshotExportsMaxSizeInMb="10000"
snapshotExportsPercentToKeepAfterPurge="75"
snapshotExportsRaiseAlarmWhenSizeLeftInPartitionInMb="1000"
importSyncEnabled="true"
importSyncInterval="60"
importDaysToKeep="7"
importMaxSizeInMb="10000"
importPercentToKeepAfterPurge="75"
importRaiseAlarmWhenSizeLeftInPartitionInMb="1000"
workingSyncEnabled="true"
workingSyncInterval="60"
/>
```

Properties that are prefixed by *snapshotExports* specify file management settings for the snapshot_export directory. Properties that are prefixed by *import* specify file management settings for the wo_import directory.

The following behaviors apply for WO and configuration snapshot file management by the 5620 SAM:

- The 5620 SAM raises a critical disk space issue alarm when the amount of disk space is below the value specified by the corresponding RaiseAlarmWhenSizeLeftInPartitionMb property.
- The 5620 SAM triggers a file purge when the disk space used by the files in an activation subdirectory is greater than the corresponding MaxSizeInMb property.
- During a file purge, the 5620 SAM sorts the files by age and deletes files according to the file age. The corresponding PercentToKeepAfterPurge property specifies the percentage of the files that are kept after a purge.
- The 5620 SAM automatically deletes all WO (.xwo) and configuration snapshot (.xcm) files that are older than the number of days specified by the corresponding DaysToKeep property. Other file types are not deleted.

File management procedures

Perform the following procedures to configure WO and configuration snapshot disk space usage on the 5620 SAM main server.

Procedure 6-6 To configure WO and configuration snapshot file management on the 5620 SAM main server

Perform this procedure to configure the disk usage thresholds and file retention settings for WO and configuration snapshot files on the 5620 SAM main server.

Caution — Modify only the parameters specified in this procedure. Unauthorized modification of the nms-server.xml file can seriously affect network management and 5620 SAM performance.

Note 1 — The samadmin user requires read and write permissions to each directory specified in this procedure.

Note 2 — The Solaris command lines in this procedure use the # symbol to represent the command prompt. The actual prompt may differ, depending on the type of command shell that is in use. Do not type the # symbol when entering a command.

1. Log in to the 5620 SAM server station as the samadmin user.
2. Navigate to the 5620 SAM server configuration directory, typically /opt/5620sam/server/nms/config.
3. Create a backup copy of the nms-server.xml file.
4. Open the nms-server.xml file using a plain-text editor.
5. Search for the following XML tag:

```
<activation
```

6 Configure the following fields for WO file management:

- importDaysToKeep="*days*"
- importMaxSizeInMb="*max_size*"
- importPercentToKeepAfterPurge="*percent_to_keep*"

where

days is the amount of time, in days, that the 5620 SAM will keep WO files in the activation/wo_import directory

max_size is the specified maximum amount of disk space, in Mb, that the 5620 SAM allocates for WO files

percent_to_keep is the percentage of files that are retained after a file purge

7 Configure the following fields for configuration snapshot file management:

Note — The maximum value for snapshotExportsDaystoKeep is 14 days. If you enter a value higher than 14, configuration snapshot files will still be deleted after 14 days.

- snapshotExportsDaysToKeep="*days*"
- snapshotExportsMaxSizeInMb="*max_size*"
- snapshotExportsPercentToKeepAfterPurge="*percent_to_keep*"

where

days is the amount of time, in days, that the 5620 SAM will keep configuration snapshot files in the activation/snapshot_export directory

max_size is the specified maximum amount of disk space, in Mb, that the 5620 SAM allocates for configuration snapshot files

percent_to_keep is the percentage of files that are retained after a file purge

8 Save and close the nms-server.xml file.

9 Navigate to the 5620 SAM server binary directory, typically /opt/5620sam/server/nms/bin.

10 Enter the following command at the prompt:

```
# ./nmsserver.bash read_config ↵
```

The 5620 SAM main server reads the nms-server.xml file and puts the configuration change into effect.

11 Close the console window.

7 — eNodeB online configuration

7.1 Online configuration overview *7-2*

7.2 ENB Equipment and eNodeB NE instance objects *7-5*

7.3 Bulk operations *7-8*

7.4 Logical objects manager *7-8*

7.5 9400 NEM support *7-9*

7.1 Online configuration overview

Online configuration is the process of configuring eNodeB parameters by using the 5620 SAM GUI, OSS interface, or the 9400 NEM. The information in this chapter is limited to managed objects within the LTE RAN domain, such as for the eNodeB.

Logical object view

You can view the logical object view of the eNodeB object hierarchy by opening the properties forms for the ENB Equipment object and eNodeB instance and clicking on the Components tab button. See Procedures 7-1 and 7-2 for more information about opening the properties forms for the ENB Equipment and eNodeB instance objects of an eNodeB NE.

See Figure 7-1 for an example of the logical object view of an ENB Equipment object that is expanded to view the eNodeB instance and Cell objects.

Figure 7-1 Logical view of eNodeB objects

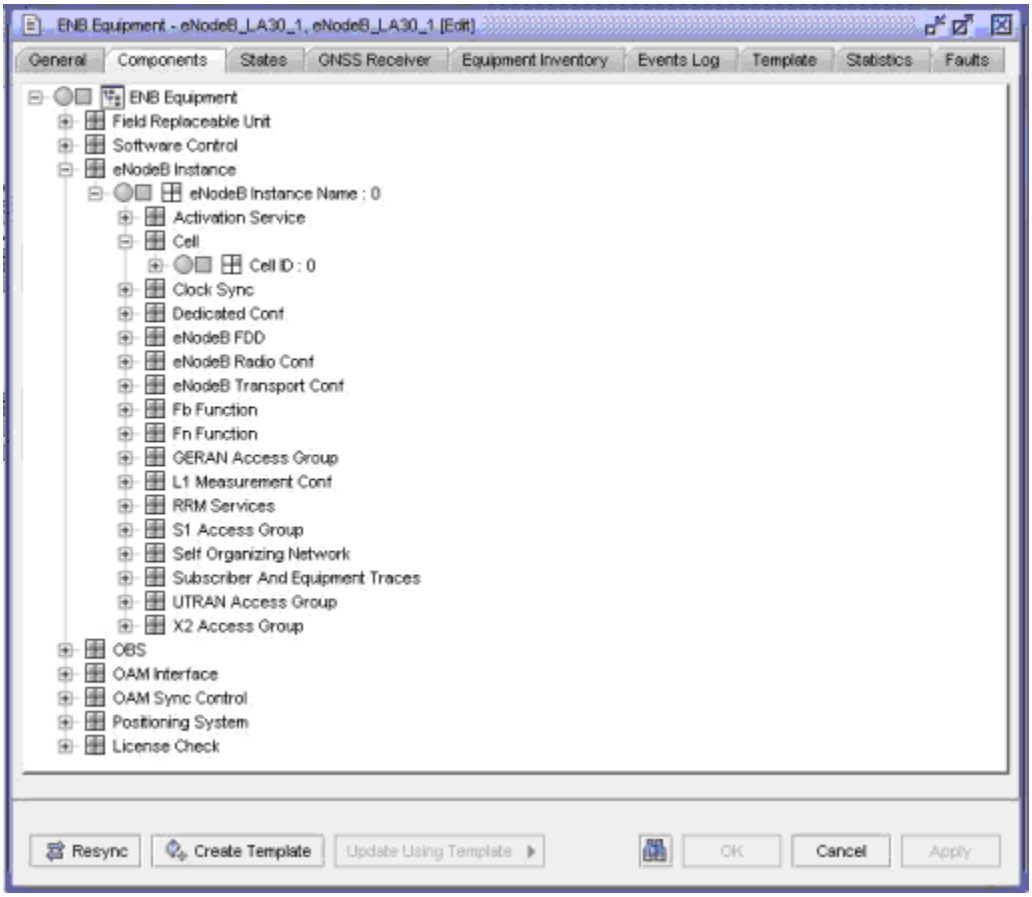

You can expand a logical object to view the child objects. You can also open properties forms for objects in the logical objects view by using the right-click contextual menu, and use the properties form to modify eNodeB parameters.

Note — You cannot create or delete eNodeB objects by using the logical object view of the 5620 SAM GUI. You must use WO deployment via offline configuration to create or delete eNodeB objects.

Online configuration of the eNodeB does not utilize the engineering and validity checks that are present in WO deployment with the 5620 SAM activation manager (offline configuration). In order to prevent critical inconsistencies in eNodeB configuration, object create and delete actions are not available for online configuration of eNodeB NEs.

See chapter 6 for more information about using offline configuration to deploy a WO to one or more eNodeB NEs.

eNodeB parameters

It is important to understand the following information before configuring eNodeB parameters by using online configuration in the 5620 SAM.

eNodeB parameter visibility

The eNodeB parameters are categorized by access into the following visibility levels:

- Customer—Read and write access is available to customers.
- Manufacturer—Read and write access is not available to customers. These parameters are set in the factory or at commissioning.

eNodeB parameter categories

eNodeB parameters are categorized as alpha, beta, or gamma.

Alpha parameters are transport-related parameters that are required for communications between the eNodeB and the 5620 SAM. Alpha parameters are part of the eNodeB SNMP MIB. Default values for some alpha parameters are set in the factory and must be modified during commissioning by using the 9400 NEM. Alpha parameters include the following:

- DCHP parameters
- OAM IP address
- VLAN parameters

Beta parameters are eNodeB hardware and site parameters, and are set on site at commissioning. Beta parameters include the following:

- antenna, RF, and sector definition
- BTS location
- alarm configuration and data
- NTP server IP address

Gamma parameters are the telecommunications parameters of the eNodeB NetConf MIM, and are configured by the 5620 SAM. Gamma parameters include the following:

- eNodeB name
- cell definitions
- S1/X2 link definitions
- VLAN and IPsec information
- neighbor lists

eNodeB parameter classes

The eNodeB gamma parameters are classified by device impact into the following three classes:

- Class A (high service impact)—A full reset occurs on the eNodeB when you modify class A parameters, which is service-affecting. The eNodeB OAM interface is unavailable during the device reset. See Figure 7-2 for the class A icon.
- Class B (moderate service impact)—A reset or temporary lock of an eNodeB component, cell, or application occurs when you modify class B parameters, which can be service-affecting. The eNodeB OAM interface remains available. See Figure 7-3 for the class B icon.
- Class C (no service impact)—A reset does not occur on the eNodeB when you modify class C parameters. No services are affected. Class C parameters do not have an identifying icon.

Figure 7-2 Class A parameter icon

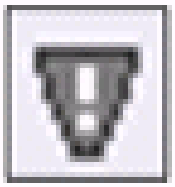

Figure 7-3 Class B parameter icon

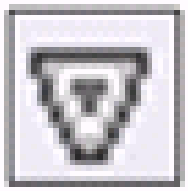

Clear parameters

eNodeB parameters can be left unset or cleared. An unset parameter is the equivalent of an absent parameter in the terminology of the eNodeB MIM. A cleared parameter in the eNodeB MIM contains absolutely no value. Integer parameters are set to their default value or a special value (such as -1) when cleared.

7.2 ENB Equipment and eNodeB NE instance objects

The ENB Equipment object is the root of the parameter tree in the eNodeB NetConf MIM, and is the parent object to the eNodeB instance object. The eNodeB instance object is the parent to radio parameters. From these two parent objects, parameters are further organized into approximately 150 child objects, depending on eNodeB version. Each child object is further subdivided into a range of configurable parameters.

See the *5620 SAM LTE Parameter Reference* for descriptions of the objects and parameters of the eNodeB NetConf MIM.

ENB Equipment and eNodeB NE instance property forms

The parameters and properties of the eNodeB NetConf MIM can be configured in the ENB Equipment and eNodeB NE instance property forms. These property forms contain a variety of configurable and read-only parameters in the General tab and other tab areas, however, the majority of child objects are accessed in the Components tab. The contents of the Components tab are presented in a hierarchical tree format similar to the equipment window. Child objects also have their own properties forms and components tabs.

The eNodeB instance is the parent object to several objects that are important for online configuration. The eNodeB NetConf object structure varies between eNodeB software versions. The following list includes some of these objects:

- Activation Service—This object contains parameters for enabling or disabling eNodeB features such as ANR, PCI, and IRAT HO.
- Cell—This object is the parent to LTE cells.
- Self Organizing Network—This object is the parent to SON objects that specify neighbor relations settings between eNodeBs.
- Subscriber and Equipment Traces—This object is the parent to call trace objects and can be used to create call trace sessions.

Deleting the ENB Equipment object

You can delete the ENB Equipment object by clicking on the Delete button in the Network Element form.

Caution — Deleting the ENB Equipment object for an active eNodeB will disable the eNodeB until a complete reconfiguration is performed. This is not a recommended action.

Deleting the ENB Equipment object for an active eNodeB erases the contents of the NetConf MIM and is highly service-affecting, as the eNodeB will require a complete reconfiguration. Some SNMP parameters in the device MIB may also be affected by the delete operation, which may affect communications between the eNodeB and the 5620 SAM.

The only time when you should delete the ENB Equipment object is to reset parameter settings for pre-provisioned NE instances that have not yet been associated with a live eNodeB. For example, you can delete the ENB Equipment object in a situation where the wrong WO was associated with a pre-provisioned NE instance and a complete reconfiguration of the NE template is required.

ENB Equipment and eNodeB NE instance procedures

Perform the following procedures to access the properties forms for the ENB Equipment and eNodeB NE instance objects. See the *5620 SAM LTE Parameter Reference* for more information about the parameters that can be accessed by using the following procedures.

Procedure 7-1 To open an ENB Equipment properties form

Perform this procedure to access the ENB Equipment properties form and configure the contained parameters.

Caution — Manual configuration of the parameters contained in the ENB Equipment form is potentially service-affecting and should only be performed by qualified operators.

1. Choose Equipment from the navigation tree view selector. The navigation tree displays the Equipment view.
2. Click on the plus sign to expand the view to locate the appropriate eNodeB, if required.
3. Right-click on an eNodeB and choose Properties from the contextual menu. The Network Element form opens with the General tab displayed.
4. Click on the Properties button in the ENB Base Configuration panel. The ENB Equipment form opens with the General tab displayed. A dialog box appears.
5. Click on the Yes or No button to specify whether changes to the ENB Equipment form will be managed by the contained Network Element form.
6. Configure parameters, as required.
7. Click on the Apply button in the ENB Equipment form, and the Network Element form, if required, to save configuration changes.

Procedure 7-2 To open an eNodeB NE instance property form

Perform this procedure to access the eNodeB instance form and configure the contained parameters.

Caution — Manual configuration of the parameters in the eNodeB instance is possibly service-affecting and should only be performed by qualified operators.

Note — The eNodeB instance form can also be accessed by using the eNodeB logical objects manager. See Procedure 7-4 for instructions on using the logical objects manager.

1. Choose Equipment from the navigation tree view selector. The navigation tree displays the Equipment view.
2. Click on the plus sign to expand the view to locate the appropriate eNodeB, if required.
3. Right-click on an eNodeB and choose Properties from the contextual menu. The Network Element form opens with the General tab displayed.
4. Choose the eNodeB instance in the ENB Instances panel and click on Properties. The eNodeB NE Instance form opens with the General tab displayed.
5. Configure parameters, as required.
6. Click on the Components tab button to view the object tree.
7. Configure child objects, as required.
8. Click on the Apply button in the eNodeB NE Instance form to save configuration changes.

Procedure 7-3 To lock or unlock an eNodeB

Caution 1 — Locking an eNodeB disables radio resources on the NE.

Caution 2 — Locking an eNodeB prevents configuration changes until the NE is unlocked.

1. Perform Procedure 7-1 to open the ENB Equipment properties form for an eNodeB.
2. Click on the States tab button.
3. Perform one of the following:
   - **a** To lock the eNodeB, choose Locked from the Administrative State drop-down menu.
   - **b** To unlock the eNodeB, choose Unlocked from the Administrative State drop-down menu.
4. Click on the Apply button. A dialog box appears.
5. Click on the Yes button to confirm the changes and close the dialog box.
6. Close the ENB Equipment form.

7.3 Bulk operations

The 5620 SAM does not currently support the use of the bulk operations function to modify eNodeB parameters and objects. The RAN objects do not appear in the bulk change forms. Use the logical objects manager to configure multiple instances of a managed object type simultaneously. See section 7.4 for more information about using the logical objects manager.

7.4 Logical objects manager

The eNodeB logical objects manager allows operators to access the Properties forms of multiple objects simultaneously. You can use the logical objects manager to modify service-affecting settings across multiple devices to synchronize eNodeB resets that result from class A or B parameter modifications and minimize network impact. You can also use the logical objects manager to browse dynamic managed objects such as X2 connections between eNodeBs.

Logical objects manager procedures

Perform the following procedures to access and modify objects by using the logical objects manager. See the *5620 SAM LTE Parameter Reference* for more information about the objects and parameters that can be configured by using the logical objects manager.

Procedure 7-4 To access and modify objects with the logical objects manager

Perform this procedure to access the Properties form of multiple objects simultaneously.

Caution — When you modify class A and B parameters, a full or partial reset of their parent eNodeB will occur, which is service-affecting.

1. Choose Manage→Mobile Access→eNodeB Logical Objects from the 5620 SAM main menu. The Manage eNodeB Logical Objects form opens.
2. Select an object type from the Select Object Type drop-down menu.
3. Configure the filter criteria, if required, and click on the Search button to generate a list of objects.
4. Choose multiple objects by pressing and holding the CTRL key and clicking on an object.

5 Click on the Properties button to display the properties form for the selected objects. A single Properties form opens with (Multiple Instances) specified.

Note — Navigating to a child object form from a multiple instance Properties form, such as from a multiple instance eNodeB NE Instance form to the Cell form, will open a single instance of the child form and is not a recommended action. Use the logical objects manager to directly open multiple instances of child objects.

6 Configure the parameters contained by the multiple instance Properties form, as required, and save the changes.

7.5 9400 NEM support

The 5620 SAM supports the launching of up to two simultaneous 9400 NEM sessions from a single 5620 SAM client application. You can use the 9400 NEM launch function to connect to an eNodeB that is located in a different subnet than the 5620 SAM client application. The 9400 NEM connection will persist in the case of a restart of the 5620 SAM main server.

The following restrictions apply to 9400 NEM support with the 5620 SAM:

- Only one 9400 NEM session can be used to connect to a single eNodeB from the 5620 SAM client application at one time.
- The 9400 NEM session must be closed if the IP address of the eNodeB changes or if the eNodeB changes to an unmanaged state.
- The use of two simultaneous 9400 NEM sessions on a single 5620 SAM client application may result in system instability. Alcatel-Lucent recommends limiting 9400 NEM usage to a single session per client application.
- The 9400 NEM connection to the eNodeB is lost when the 5620 SAM main server performs an activity switch to the redundant server.

See the *Alcatel-Lucent 9400 eNodeB Network Element Manager (NEM) User Guide 418-000-390* for more information about using the 9400 NEM.

9400 NEM launch procedures

Perform the following procedures to launch the 9400 NEM from the 5620 SAM client GUI.

Procedure 7-5 To launch the 9400 NEM from the 5620 SAM client GUI

Perform this procedure to launch a 9400 NEM instance and connect directly to an eNodeB. You must have a 5620 SAM user account with an administrator or eNodeB NEM operator scope of command role in order to launch the 9400 NEM from the 5620 SAM client GUI.

1. Choose Equipment from the navigation tree view selector. The navigation tree displays the Equipment view.
2. Expand the tree view to locate the appropriate eNodeB.
3. Right-click on an eNodeB and choose Launch NEM from the contextual menu. The 9400 NEM launches and attempts to connect to the eNodeB.

Note — You can also launch the 9400 NEM from the Network Element form of an eNodeB. This form is commonly accessed by clicking on the Properties button for the device.

LTE RAN management

8 — RAN licensing

9 — LTE RAN EPS path management

10 — LTE RAN security

11 — LTE RAN SON management

8 — RAN licensing

8.1 RAN licensing overview *8-2*

8.2 RAN licensing workflow *8-2*

8.3 5620 SAM RAN license manager *8-3*

8.4 eNodeB feature and capacity activation *8-6*

8.1 RAN licensing overview

The 5620 SAM provides a feature and capacity licensing function for the RAN through the LKDI online licensing tool and the 5620 SAM RAN license manager. Feature and capacity licenses are represented in the network by entitlements that contain a quantity of tokens. The designated CLM can purchase entitlements online by using the LKDI tool and save them as an encrypted license file. The license file can be imported into the 5620 SAM by using the RAN license manager.

See the *Alcatel-Lucent 9400 Customer License Manager (Using LKDI) User Guide 418-000-134* for more information about using the LKDI online licensing tool and the role of the CLM.

Feature license tokens are used when features are activated on RAN devices, typically through the Activation Service object. Enumerated license tokens, such as bandwidth, are used when RAN device cell parameters are configured to use the corresponding value type. Capacity tokens are used when capacity objects, such as maxNbOfCallCapacityLicensing (representing the maximum number of callers per cell), are configured on devices and cells.

Consider the following information about RAN licensing with the 5620 SAM.

- Only one license file can be active in the 5620 SAM network at a time.
- You cannot enable features or add capacity when the existing license capacity does not allow it.
- Tokens can be used, released, and reassigned to other devices. Tokens are not single-use objects.
- Temporary licenses have an expiration date, after which time the tokens cannot be distributed to devices.
- Features and capacity are not disabled or removed when active tokens expire. The 5620 SAM raises license alarms on devices that are in license violation.
- A global license violation in the 5620 SAM network will prevent RAN device modifications until the license violation is resolved.
- Token expiry can cause the number of available tokens to become negative. The number of available tokens must be positive before more tokens of that type can be assigned to RAN devices.

8.2 RAN licensing workflow

1. Acquire RAN license files by using the LKDI online licensing tool.
2. Import RAN license files into the 5620 SAM by using the RAN license manager.
3. Configure notification thresholds for license usage and specify a recipient email address for license notifications.
4. Activate features and capacity on RAN devices and cells.
5. Monitor installed license capacity and adjust license allocation accordingly.

8.3 5620 SAM RAN license manager

The RAN license manager allows you to view and manage RAN device license capacity in the 5620 SAM network. You can import an LKDI license file into the 5620 SAM by using the RAN license manager. The license file must be in the correct format, contain a valid license signature, and the tokens contained in the license file must correspond to the host ID of the 5620 SAM server. For redundant installations of the 5620 SAM, the license file must contain the host IDs of the active and standby servers. The 5620 SAM continues to use the previous license file when you try to import an invalid license file.

You can set alarm and notification thresholds for token capacities by using the RAN license manager. Tokens that have reached the specified thresholds are faulted and are colored according to the level of alarm severity. The 5620 SAM validates a license file during the import operation and raises license violation alarms as required. The 5620 SAM sends an email to the specified address when a usage threshold is crossed.

The activation manager notifies operators when the activation of a WO will affect network license tokens. The 5620 SAM raises an alarm and WO activation is blocked by the 5620 SAM when the WO activation causes a license violation. See the *5620 SAM LTE Alarm Reference* for more information about alarms in the RAN license domain.

WO activation is permitted when the activation process results in the release of capacity licenses. WO fallback is permitted by the 5620 SAM even when the fallback operation will result in a license violation.

The RAN license manager displays the active license file in the Active License File Information panel in the General tab of the RAN License Manager form. The Active License File Information panel provides the following information about the active license file:

- license file import status
- file name
- import date
- IP address of the 5620 SAM client that performed the import action
- user name of the user that imported the active license file

The RAN Report tab of the RAN License Manager form displays the following information about the features, capacities, and tokens of the active license file:

- license name
- license type (capacity, feature, or specific)
- technology type (LTE or W-CDMA)
- total purchased
- total consumed
- total available
- percentage remaining
- expiration date
- days remaining before expiration

RAN license manager procedures

Perform the following procedures to manage RAN license capacity by using the RAN license manager. See the *5620 SAM Parameter Guide* for more information about the parameters that are described in the following procedures.

Procedure 8-1 To import a RAN license file by using the RAN license manager

You must have a license file from the LKDI on your client computer before you can import the license file into the 5620 SAM.

1. Choose Administration→RAN License Manager from the 5620 SAM main menu. The RAN License Manager form opens with the General tab displayed.
2. Review the license file information in the Active License File Information panel, is required.
3. Click on the Browse button in the Import License File panel. The Select RAN License file form opens.
4. Navigate to the location of the license file.
5. Choose the license file and click on the Open button. The license file name displays in the License File To Import field.
6. Perform one of the following steps.
   - **a** Import the license file.
     - **i** Click on the Import button. A warning dialog appears.
     - **ii** Select the check box to acknowledge the warning and click on the Yes button to close the dialog. The licenses contained in the license file are imported into the 5620 SAM and the RAN license capacity is updated.
   - **b** Clear the license file and select another file.
     - **i** Click on the Clear button. The License File to Import field is cleared.
     - **ii** Go to step 3 and select another file.
7. Click on the RAN Report tab button.
8. Verify the new license capacity as required.
9. Close the RAN License Manager form.

Procedure 8-2 To configure RAN license file reporting

1 Choose Administration→RAN License Manager from the 5620 SAM main menu. The RAN License Manager form opens with the General tab displayed.

2 Configure the parameters:

- Report File Format
- First Usage Threshold (%)
- Second Usage Threshold (%)
- First Expiration Threshold (days)
- Second Expiration Threshold (days)
- Email Recipient Address

3 Click on the Apply button. A dialog appears.

4 Click on the Yes button to close the dialog.

5 Click on the Faults tab button.

6 Review any license alarms that result from changes to the threshold parameters, as required.

7 Close the RAN License Manager form.

Procedure 8-3 To view the current RAN license file information

1 Choose Administration→RAN License Manager from the 5620 SAM main menu. The RAN License Manager form opens with the General tab displayed.

2 Review the license file information in the Active License File Information panel.

3 Click on the RAN Report tab button.

4 Click on the Search button.

Note — The RAN license information in the RAN Report tab is not automatically refreshed when changes to the token consumption occur while the RAN License Manager form is open. You must click on the Search button to refresh the list.

5 Review the information in the list.

6 Close the RAN License Manager form.

Procedure 8-4 To generate a RAN license report

You can generate a report file that contains the information displayed in the RAN Report tab of the RAN License Manager form. You can choose HTML or CSV as the format for the generated file.

1. Choose Administration→RAN License Manager from the 5620 SAM main menu. The RAN License Manager form opens with the General tab displayed.
2. Click on the RAN Report tab button.
3. Click on the Generate Report button. The Save As form opens.
4. Navigate to the directory that you want to save the report file in.
5. Enter a name for the file in the File Name field.
6. Click on the Files of Type drop-down menu and choose CSV or HTML.
7. Click on the Save button to save the report file and close the Save As form.
8. Close the RAN License Manager form.

8.4 eNodeB feature and capacity activation

This section describes feature and capacity activation on eNodeB NEs and cells. Feature and capacity tokens are used when the appropriate parameters are configured on RAN devices by using offline or online configuration.

Enumerated entitlements

Enumerated entitlements are consumed by configuring the corresponding enumerated parameters on device objects. The FrequencyAndBandwidthFDD object contains parameters that correspond to enumerated entitlements.

Feature entitlements

Feature entitlements are consumed by enabling the corresponding boolean parameters on device objects. In the RAN license manager, feature entitlements correspond to parameter names and are prefixed by *LTE*. For example, LTEAnrEnable tokens are consumed by enabling the anrEnable parameter.

The following objects contain feature entitlement parameters:

Note — Feature licensing on the objects listed below is only applicable to eNodeB LA3.0 and above.

- Activation Service
- Cell Activation Service
- Subscriber And Equipment Traces

Capacity entitlements

Capacity entitlements are consumed by configuring parameters on following objects:

- License Check (LA3.0 and above)
- Capacity (LA2.0)

Feature and capacity activation procedures

Perform the following procedures to enable or disable features and specify capacity consumption. See the *5620 SAM LTE Parameter Reference* for more information about the parameters that are described in the following procedures.

Note — Perform the procedures in section 8.3 in conjunction with the procedures in this section to verify that RAN license entitlements can accommodate additional token consumption and to ensure that RAN license violations do not occur.

Procedure 8-5 To configure capacity entitlement token consumption on an eNodeB

Perform this procedure to specify bandwidth permissions in the License Check object and allocate tokens to an eNodeB.

1. Perform Procedure 7-1 to open the ENB Equipment form of an eNodeB.
2. Click on the Components tab button.
3. Perform one of the following:
   - a. For LA3.0 and above, right-click on the License Check object and choose Properties from the contextual menu. The License Check (Edit) form opens.
   - b. For LA2.0, right-click on the Capacity object and choose Properties from the contextual menu. The License Check (Edit) form opens.
4. Configure the following capacity parameters, as required:

Note — Configuring the following parameters will consume RAN license tokens. Verify that existing entitlement capacity is sufficient before configuring these parameters.

- maxNbOfCallCapacityLicensing
- transmissionPowerCapacityLicensing

5. Click on the OK button to close the current form and return to the ENB Equipment form.

6 Click on the Apply button. A confirmation form appears.

7 Click on the Yes button to confirm the changes and close the confirmation form. Any changes to the object parameters are saved and token consumption is updated.

Procedure 8-6 To configure enumerated entitlement token consumption on an eNodeB

1 Perform one of the following:

   a Perform Procedure 7-2 to open the eNodeB NE Instance form of an eNodeB.

   b Perform Procedure 7-3 to use the logical objects manager to open the eNodeB NE Instance form of an eNodeB.

2 Click on the Components tab button.

3 Navigate to the Cell object The path is eNodeB NE Instance→Cell→Cell ID *n*.

4 Right-click on a Cell object and choose Properties from the contextual menu. The LTE Cell form opens with the General tab displayed.

5 Click on the Components tab button.

6 Right click on the Frequency And Bandwidth FDD object and choose Properties from the contextual menu. The Frequency And Bandwidth FDD form opens with the General tab displayed.

7 Configure the following enumerated bandwidth parameters, as required:

Caution — The following parameters are class B parameters. Applying changes to these parameters by performing step 11 will cause the Cell to reset, which can be service-affecting.

- dlBandwidth
- ulBandwidth

8 Click on the OK button to close the form and return to the LTE Cell form.

9 Click on the OK button to close the form and return to the eNodeB NE Instance form.

10 Click on the Apply button. A confirmation form appears.

11 Click on the Yes button to confirm the changes and close the confirmation form. The changes to the cell are saved, the cell resets, and RAN license token consumption is updated.

12 Close the eNodeB NE Instance form.

Procedure 8-7 To configure feature entitlement token consumption on an eNodeB

Perform this procedure to activate features and consume tokens, or deactivate features and release tokens. See the Activation Service chapter of the *5620 SAM LTE Parameter Reference* for more information about the mapping between Activation Service parameters and RAN license entitlements.

Caution — Modifying some of the parameters in the Activation Service and Cell Activation Service forms will cause full or partial device resets, which is service-affecting. Icons are displayed beside parameters that cause a device impact when modified. See chapter 7 for more information about parameter class icons.

Note — Parameters on the forms in this procedure that do not have an impact on RAN licensing are not listed.

1 Perform the following steps, as required:

- **a** Configure feature entitlement token consumption on the Activation Service object. Go to step 2.
- **b** Configure feature entitlement token consumption on the Cell Activation Service object. Go to step 11.
- **c** Configure feature entitlement token consumption on the Subscriber And Equipment Traces object. Go to step 20.

Activation Service

2 Perform one of the following:

- **a** Perform Procedure 7-2 to open the eNodeB NE Instance form of an eNodeB.
- **b** Perform Procedure 7-3 to use the logical objects manager to open the eNodeB NE Instance form of an eNodeB.

3 Click on the Components tab button.

4 Navigate to the Activation Service object. The path is eNodeB NE Instance→Activation Service→Activation Service ID *n*.

5 Right-click on the Activation Service ID *n* object and choose Properties from the contextual menu. The Activation Service form opens.

6 Select or deselect the parameters that correspond to RAN license entitlements, as required.

7 Click on the OK button to close the form and return to the eNodeB NE Instance form.

8 Click on the Apply button. A confirmation form appears.

9 Click on the Yes button to confirm the changes and close the confirmation form. The changes to the Activation Service object are saved, the device resets (if applicable), and RAN license token consumption is updated.

10 Close the eNodeB NE Instance form.

Cell Activation Service

Caution — The isFiberDelayAllowed parameter is a class B parameter and will cause a reset of the associated cell when you apply changes to the parameter.

11 Perform one of the following:

a Perform Procedure 7-2 to open the eNodeB NE Instance form of an eNodeB.

b Perform Procedure 7-3 to use the logical objects manager to open the eNodeB NE Instance form of an eNodeB.

12 Click on the Components tab button.

13 Navigate to the Cell Activation Service object. The path is eNodeB NE Instance→Cell→Cell ID *n*→Cell Activation Service ID *n*.

14 Right-click on the Cell Activation Service ID *n* object and choose Properties from the contextual menu. The Cell Activation Service form opens.

15 Configure the isFiberDelayAllowed parameter.

16 Click on the OK button to close the form and return to the eNodeB NE Instance form.

17 Click on the Apply button. A confirmation form appears.

18 Click on the Yes button to confirm the changes and close the confirmation form. The changes to the Cell Activation Service object are saved, the cell resets, and RAN license token consumption is updated.

19 Close the eNodeB NE Instance form.

Subscriber And Equipment Traces

20 Perform one of the following:

a Perform Procedure 7-2 to open the eNodeB NE Instance form of an eNodeB.

b Perform Procedure 7-3 to use the logical objects manager to open the eNodeB NE Instance form of an eNodeB.

21 Click on the Components tab button.

22 Navigate to a Subscriber And Equipment Traces object. The path is eNodeB NE Instance→Subscriber and Equipment Traces→Subscriber and Equipment Traces ID *n*.

23 Right-click on the Subscriber and Equipment Traces ID *n* object and choose Properties from the contextual menu. The Subsc and Equipment Traces (Edit) form opens with the General tab displayed.

24 Configure the is PCMDEnabled parameter.

25 Click on the OK button. The Subsc and Equipment Traces (Edit) form closes.

26 Click on the Yes button. The Manage Call Trace Sessions form closes.

9 — LTE RAN EPS path management

9.1 EPS path topology map overview *9-2*

9.2 EPS peers and paths *9-9*

9.3 5620 SAM network topology maps *9-13*

9.1 EPS path topology map overview

The EPS path topology map displays a static representation of mobile network objects and EPS paths. Each network object icon represents an aggregate of all network objects of that type. For SGWs and PGWs, the icon represents an aggregate of all instances of that gateway type and all network objects that contain instances of that type. Each EPS path link represents an aggregate of all EPS paths of a specific type. Figure 9-1 shows the main elements of the mobility topology map.

Figure 9-1 EPS path topology map elements

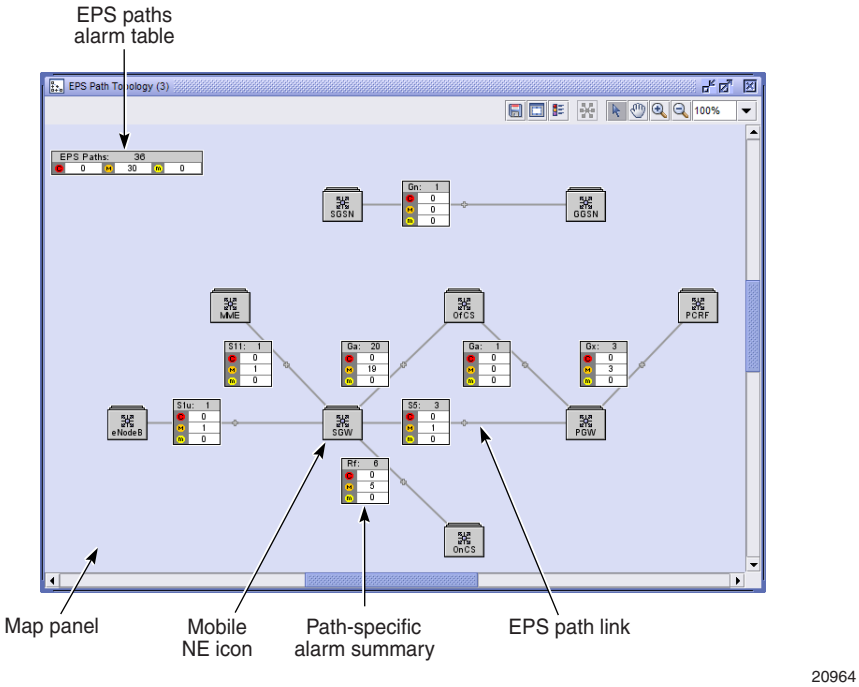

EPS path topology map window

The EPS path topology map window consists of:

- a titlebar
- a map panel that displays the network objects
- a map toolbar which consists of a collection of buttons that are used to manage the map view

The titlebar of the map window displays the following information:

- map type, which is EPS Path Topology in this case
- map number, which indicates the order in which the map was opened; for example, whether it is the first or the tenth map opened. There is no limit to the number of topology maps that you can have open at the same time.

EPS path topology map panel

The EPS path topology map panel displays a static map of the mobile network that contains:

- icons that represent an aggregate of the unmanaged mobile NEs and gateways
- icons that represent an aggregate of a mobile NE type or instance
- links between network elements that represent an aggregate of the EPS paths, such as S5
- an EPS path aggregated alarm table for each type of path
- an EPS aggregated alarm table for all EPS paths in the network; the table displays the total number of EPS paths and the number of paths that have at least one critical, major, and minor alarm
- icons that represent functions, such as the offline charging system

Selecting map objects

Click on the Select Tool button to select an object on the map. You can select multiple objects by pressing the Shift key and clicking on each object you need to select, or by drawing a selection rectangle around all of the objects you need to select on the topology map. You can select all of the NEs that are attached to an NE by selecting one or more NEs, right-clicking, and choosing Select Attached from the contextual menu. You can deselect a selected NE by pressing the CTRL key and clicking on the NE you need to deselect.

Moving map objects

You cannot move the map objects.

EPS path links

The map displays links that represent all EPS paths of a specific type between two mobile NEs or instances. You can right-click on a link to display a list of EPS paths.

Alarm tables

Each EPS path link is associated with an alarm table. There is also a path alarm table for the mobile network.

Zoom in and out using a mouse

The ability to zoom in and out on a map allows you to increase or decrease the size of the map. Use the mouse wheel to zoom in and zoom out of the map. Click on the map and roll the mouse wheel forward to zoom in or roll the mouse wheel backward to zoom out. Each roll of the mouse wheel brings the map objects closer or farther.

EPS path topology map toolbar

The EPS path topology map toolbar allows you to manage the view of the map. The toolbar appears above the map panel in the map window. Figure 9-2 shows the map toolbar and its elements.

Figure 9-2 Map toolbar elements

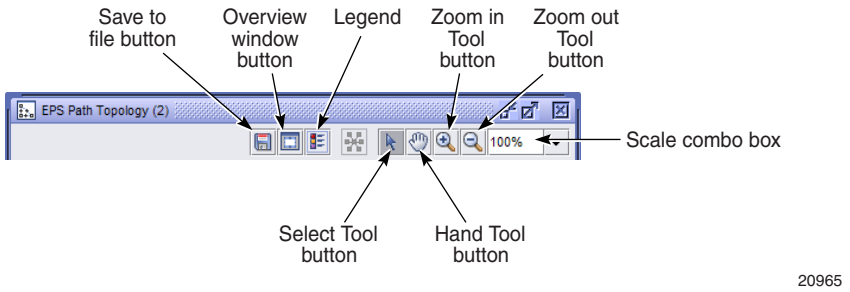

Save To File button

Click on the Save To File button to save the map view or the full map. You can choose the location to save the map image and the file type. See Procedure 9-3 for more information about using the Save To File button. Figure 9-3 shows the Save To File button.

Figure 9-3 Save To File button

Overview Window button

Click on the Overview Window button to open the Overview window. Use the Overview window to pan the entire map and the area that you want to view.

Legend Tool button

Click on the Legend Tool button to open the Legend - EPS Path Topology window. The window contains a table that explains the meaning of the topology map icons. Figure 9-4 shows the Legend - EPS Path Topology display.

Figure 9-4 Legend - EPS Path Topology

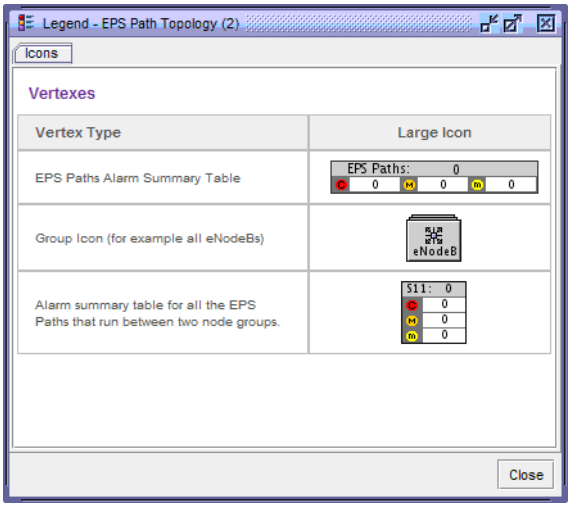

Select Tool button

Click on the Select Tool button to select an object on the map. You can select multiple objects by pressing the Shift key and clicking on each object you want to select, or by drawing a selection rectangle around all the objects you want to select on the mobility topology map.

Hand Tool button

Click on the Hand Tool button to switch to a pan mode. Click on the background to move the contents of the map in any direction.

Zoom in and zoom out using a Mouse or Tool buttons

The ability to zoom in and out on a map allows you to view details of the map. Click on the Zoom in Tool and Zoom out Tool buttons, and click on the map to resize the objects in a map or use the mouse wheel to zoom in and zoom out of topology maps. Click on the map and roll the mouse wheel forward to zoom in or roll the mouse wheel backward to zoom out. Each roll of the mouse wheel brings the map objects closer or farther.

Scale combo box

Use the scale combo box to increase or decrease the zoom in the map. You can choose a zoom percentage value from 25% to 300%, or fit all objects in the window from the drop-down menu. The scale combo box displays the current scale of the map.

EPS path topology map management procedures

Perform the following procedures to perform map management tasks.

Procedure 9-1 To open the EPS path topology map

1 Choose Application→EPS Path Topology from the 5620 SAM main menu.

2 The EPS path topology map appears.

See Procedure 9-2 for information about the map elements. See section 9.1 for information about the map view.

Procedure 9-2 To view EPS path topology map elements

1 Open an EPS path topology map, as described in Procedure 9-1. Figure 9-1 shows the map main elements.

2 View the NEs, links, and alarm tables, as required:

a View the EPS path topology map icons that represent mobile network NEs. Table 9-1 describes the map icons.

Table 9-1 EPS path topology map icons

Map icon type	Description
MME	Represents all of the managed MME devices and MME devices that have an EPS path to another NE. When you right-click on an MME icon, you can choose to display a list of all MME instances represented by the icon or all NEs that contain an MME instance. See the *5620 SAM LTE ePC User Guide* for more information about viewing MME properties.
SGW	Represents all of the managed SGW instances and all of the managed network elements that contain SGW instances. When you right-click on an SGW icon, you can choose to display a list of all gateway instances represented by the icon or all NEs that contain an SGW instance. See the *5620 SAM LTE ePC User Guide* for more information about configuring SGWs.
PGW	Represents all of the managed PGW instances and all of the managed network elements that contain PGW instances. When you right-click on a PGW icon, you can choose to display a list of all gateway instances represented by the icon or all NEs that contain a PGW instance. See the *5620 SAM LTE ePC User Guide* for more information about configuring PGWs.
PCRF	Represents all of the managed PCRF devices in the network and the PCRF devices that have an EPS path to another NE. When you right-click on a PCRF icon, you can choose to display a list of all DSC instances represented by the icon or all NEs that contain a DSC instance. See the *5620 SAM LTE ePC User Guide* for more information about viewing DSC properties.
GGSN	Represents the Gateway GPRS Support Node (GGSN) instances and all managed network elements that contain GGSN instances. When you right-click on a GGSN icon, you can choose to display a list of PGWs that are functioning as GGSNs.

(1 of 2)

Map icon type	Description
SGSN	Represents the Serving GPRS Support Node (SGSN) instances. When you right-click on an SGSN icon, you can choose to display a list of all unmanaged elements of type SGSN.
eNodeB	Represents all of the network elements of type eNodeB.
OfCS	Represents the offline charging system, a charging system where charging information does not affect, in real-time, the service being delivered.
OnCS	Represents the online charging system, a charging system where charging information can affect, in real-time, the service being delivered.

(2 of 2)

b View the EPS path links. The EPS path links, which appear in the map between NEs, represent an aggregate of all of the EPS paths of a specific type. Right-click on a link and click on the menu item to display a list of all of the EPS paths that are represented by the link. You can choose a path from the list to view or modify the path properties.

c View the EPS path alarm tables. Table 9-2 describes the EPS path alarm tables.

Table 9-2 EPS path alarm tables

Alarm table type	Description
EPS path-specific alarm tables	Each EPS path type is associated with an alarm table that is displayed over the path link on the map. Each alarm table displays the: • path type • total number of paths represented by the link • rows that display the number of paths with at least one critical, major, or minor alarm
EPS paths alarm table	There is one EPS paths alarm table associated with the topology map. The EPS paths alarm table displays the: • total number of paths of all types in the mobile network • total number of paths of all types that have at least one critical, major, or minor alarm

Procedure 9-3 To save a map view to a file

You can use the Save to File button to save a portion of a map or the entire map to the local file system. You can save the file to JPEG, JPG, BMP, and PNG formats.

1 Open an EPS path topology map, as described in Procedure 9-1.

2 Click on the Save To File button. The save options are displayed in the drop-down menu.

3 Choose an option from the drop-down menu:

- Choose Save Map View to save the current view.
- Choose Save Full Map to save the entire map view.

The Save form appears.

4 Save the results.

i To choose a directory in which to save the listed information, configure the Save In parameter.

ii To create a filename, configure the File Name parameter.

iii Choose BMP, JPEG, JPG, or PNG from the File of Type drop-down menu.

iv Click on the Save button. The map view is saved to the specified file.

Procedure 9-4 To zoom in and zoom out of a map

1 Open an EPS path topology map, as described in Procedure 9-1.

2 Perform one of the following:

a Use the mouse wheel to zoom in and zoom out. Click on the map. To zoom in, roll the mouse wheel forward. To zoom out, roll the mouse wheel backward.

b Click on the Zoom in Tool or Zoom out Tool button. Go to step 3.

3 Move your cursor into the map panel. The icon changes to a magnifying glass that contains a + or - sign.

4 Click on the area of the map you need to expand or contract. The map expands or contracts. Continue clicking until the required zoom level is reached.

5 Use the opposite button and an equal number of clicks to return the map to the default setting.

6 To return to the pointer icon, click on the Select Tool button in the toolbar.

Procedure 9-5 To view and modify EPS path information

1. Open an EPS path topology map, as described in Procedure 9-1.
2. To list EPS paths, perform one of the following.
   - **a** Using an EPS path link:
     - **i** Right-click on the EPS path link for the type of path that you need to list.
     - **ii** Click on the displayed menu item. An EPS paths form opens that displays a list of paths.
     - **iii** Choose a path from the list and click on the Properties button. The properties edit form for the EPS path opens.
   - **b** Using the EPS path alarm table:
     - **i** Right-click on the EPS path alarm table at the top of the EPS path topology map.
     - **ii** Click on the menu item. The EPS Paths form opens.
     - **iii** Click on the Select Object Type button and choose the type of path from the list.
     - **iv** Click on the Search button. A list of paths appears.
     - **v** Choose a path from the list and click on the Properties button. The path type edit form opens.
3. View and modify the path information, as required.
4. Close the path edit form.
5. Close the EPS paths form.

9.2 EPS peers and paths

The 5620 SAM allows you to view the status, statistics, state, and faults associated with the EPS peers and paths.

Each peer or path combines a pair of matching reference points and peer objects of two ePC nodes in a managed entity. Reference points are based on the LTE 3GPP standard, and are created automatically when you configure an LTE node such as an SGW or a PGW. EPS paths are created dynamically when LTE peer devices are signaled. After the 5620 SAM resynchronizes a control session, the EPS peers and EPS paths are discovered by the 5620 SAM.

EPS peers

EPS peers are neighboring nodes that share the endpoints of an EPS path. An example is an S5 EPS path: one endpoint is always an SGW and the other endpoint is always a PGW. The PGW and the SGW are EPS peers.

The 5620 SAM supports the following types of peers:

- diameter-based
- GTP/PMIP-based

EPS paths

An EPS path is a point-to-point connection between LTE nodes that is used for bearer control. EPS paths include:

- eNodeB to SGW (S1-U path)
- SGW to PGW (S5 path)
- SGW to MME (S11 path)
- PGW to PCRF (Gx path)
- SGW to CCF (Rf path)

The 5620 SAM allows you to discover and list all of the EPS paths in the entire mobile network or on a specific node. You can filter using specific parameters, such as type, status, and IP address, to display specific bearer paths.

EPS paths are single-sided or double-sided:

- single-sided—the 5620 SAM manages only one endpoint, such as the following:
  - S11 path between the SGW and the MME, where only the SGW is managed by the 5620 SAM
  - Gx path between the PGW and the PCRF, where only the PGW is managed by the 5620 SAM
  - S1-U path between the SGW and the eNodeB, where only the SGW is managed by the 5620 SAM
  - Rf path between the SGW and the CFF, where only the SGW is managed by the 5620 SAM
- double-sided—the 5620 SAM manages both endpoints, such as the S5 interface between the SGW and PGW, where both gateways are managed by the 5620 SAM

Procedures

The following procedures describe how to view the properties of EPS peers and paths.

Procedure 9-6 To view the properties of EPS peers from the EPS Peers and Paths form

1. Choose Manage→Mobile Core→EPS Peers and Paths from the 5620 SAM main menu. The Manage EPS Peers and Paths form opens.

2. Choose Evolved Packet Solution Peer (LTE) from the Select Object Type drop-down menu. The supported types of peers appear as subtending objects in the Evolved Packet Solution Peer (LTE) navigation tree.

3. Perform one of the following to choose a type of peer from the drop-down menu:

   a. Diameter Based Peer (LTE)

      - AGW Diameter Peer (LTE)
        - Gx AGW Peer (LTE)
        - Rf AGW Peer (LTE)
      - DSC Diameter Peer (LTE)

   b. GTP/PMIP Based Peer (TLE)

      - AGW GTP/PMIP Peer (LTE)
        - S11 SGW Peer (LTE)
        - S1u SGW Peer (LTE)
        - S5 AGW Peer (LTE)
        - S8 AGW Peer (LTE)
      - MME GTP/PMIP Peer (LTE)
        - Gn MME Peer (LTE)
        - S10 MME Peer (LTE)
        - S11 MME Peer (LTE)
        - S13 MME Peer (LTE)
        - S1mme MME Peer (LTE)
        - S3 MME Peer (LTE)
        - S6a MME Peer (LTE)
        - SG MME Peer (LTE)
        - Sv MME Peer (LTE)

4. Configure the filter criteria, if required, and click on the Search button. The form lists the available EPS peers.

5. Choose an EPS peer from the list and click on the Properties button. The EPS Peer form opens with the General tab displayed.

6 Click on the following tab buttons for additional information:

- Diameter—lists the Diameter management state, detailed state, profile name, and profile index. This tab applies only to Gx and Rf peers.
- Statistics—lists the statistics associated with the peer
- Faults—lists the faults associated with the EPS peer according to the following alarm types:
  - Object Alarms
  - Affecting Alarms
  - Aggregated Alarms
  - Alarms on related Objects

7 Click on the Cancel button to close the form.

Procedure 9-7 To view the properties of EPS paths from the EPS Peers and Paths form

1 Choose Manage→Mobile Core→EPS Peers and Paths from the 5620 SAM main menu. The Peers and Paths form opens.

2 Choose Evolved Packet Solution Path (LTE) from the Select Object Type drop-down menu. The following supported paths appear as subtending objects in the Evolved Packet Solution Path (LTE) navigation tree:

- Gx Path (LTE)
- Rf Path (LTE)
- S11 Path (LTE)
- S1u Path (LTE)
- S5 Path (LTE)

3 Configure the filter criteria, if required, and click on the Search button. The form lists the available EPS paths.

4 Choose an EPS path from the list and click on the Properties button. The EPS Path properties form opens with the General tab displayed.

5 Click on the following tab buttons for additional information:

- Tree—lists the component tree that is associated with the path
- Drill Down—see the *5620 SAM LTE ePC User Guide* for more information about how to perform the manual drill-down operation. Drill-down is not supported on the Rf EPS paths.
- Components—this tab is populated only after the drill-down operation is performed
- Discovery Log—a log appears if the drill-down operation fails
- Faults—lists the faults associated with the EPS path according to the following alarm types:
  - Object Alarms
  - Affecting Alarms
  - Aggregated Alarms
  - Alarms on related Objects

6 Click on the Cancel button to close the form.

9.3 5620 SAM network topology maps

The 5620 SAM uses map windows to visually represent network objects and pathways. Each map displays network objects and information, and provides contextual menus to open forms that display additional information. See the *5620 SAM User Guide* for more information about generic tasks for physical topology management.

10 — LTE RAN security

10.1 Overview *10-2*

10.2 5620 SAM user and group security *10-2*

10.3 eNodeB IPsec *10-2*

10.1 Overview

The 5620 SAM provides security functions for user groups, devices, and paths.

10.2 5620 SAM user and group security

You can use the 5620 SAM to configure user accounts, user groups, and scopes of command that determine the level of access available using the GUI or OSS. For more information about user security in the 5620 SAM, see the *5620 SAM User Guide*.

Scope of command roles

The scope of command of a user is a collection of one or more roles that define the functions that the user is allowed to perform in the 5620 SAM network. Table 10-1 lists the user roles that exist specifically to support LTE RAN management with the 5620 SAM.

See the *5620 SAM User Guide* for a complete list of assignable user roles in the 5620 SAM.

Table 10-1 User roles added to the 5620 SAM for LTE RAN

Role	Access Provided	Role ID
Work Order Activation	The ability to perform CM workorder activation.	31
Configuration Snapshot Export	The ability to export CM configuration snapshots.	32
Create and Delete Access	The ability to create and/or delete eNodeB objects.	33
Configuration Management which causes node reset	The ability to configure objects which causes a full or partial reset of the node.	34
eNodeB NEM Operator	The ability to launch the 9400 NEM from the 5620 SAM client application.	36

10.3 eNodeB IPsec

The eNodeB IP security function protects all or part of the traffic of an eNodeB by routing OAM and inter-device traffic through a SEG and protected subnets. You must configure the SEG before you can use IPsec with the eNodeB. You can use the 5620 SAM to create IPsec profiles that facilitate the configuration of IPsec parameters on multiple eNodeBs. An eNodeB IPsec profile is a set of parameter configurations that you create and deploy to one or more eNodeBs. There is no default eNodeB IPsec profile. You can also configure IPsec parameters by using online or offline configuration.

IPsec procedures

Perform the following procedures to configure IPsec on the eNodeB by using the 5620 SAM. See the *5620 SAM LTE Parameter Reference* for more information about the parameters described in the following procedures.

Procedure 10-1 To enable or disable IPsec on an eNodeB

Note — Enabling the IPsec feature on an eNodeB consumes a RAN license feature entitlement token.

1. Perform one of the following:
   - **a** Perform Procedure 7-2 to open the eNodeB NE Instance form of an eNodeB.
   - **b** Perform Procedure 7-4 to use the logical objects manager to open the eNodeB NE Instance form of an eNodeB.
2. Click on the Components tab button.
3. Navigate to the Activation Service object. The path is eNodeB NE Instance→Activation Service→Activation Service ID *n*.
4. Right-click on the Activation Service object and choose Properties from the contextual menu. The Activation Service form opens.
5. Configure the isSonPciAllocationEnabled parameter to enable or disable PCI on the eNodeB.
6. Click on the OK button to close the form and return to the eNodeB NE Instance form.
7. Click on the Apply button. A confirmation form appears.
8. Click on the Yes button to confirm the changes and close the confirmation form. The changes to the Activation Service object are saved, the device resets, and RAN license token consumption is updated.
9. Close the eNodeB NE Instance form.

Procedure 10-2 To create or modify an eNodeB IPsec profile

Perform this procedure to configure an IPsec profile and deploy the profile to eNodeBs. Deploying an IPsec profile to an eNodeB will cause a device reset.

Caution — Modifying an active eNodeB IPsec profile is service-affecting.

1 Choose Policies→Mobile→eNodeB IPsec Profile from the 5620 SAM main menu. The Manage eNodeB IPsec Profiles form opens.

2 Perform one of the following:

   a Create an eNodeB IPsec profile.

      i Click on the Create button. The eNodeB IPsec Profile (Create) form opens with the eNodeB IPsec Profile tab displayed.

      ii Configure the parameters:

         - Profile ID
         - Auto-Assign ID

      iii Go to step 3.

   b Modify an eNodeB IPsec profile.

      i Configure the filter criteria, if required, and click on the Search button to generate a list of eNodeB IPsec profiles.

      ii Choose an eNodeB IPsec profile from the list and click on the Properties button. The eNodeB IPsec Profile (Edit) form opens with the eNodeB IPsec Profile tab displayed. Go to step 3.

3 Configure the parameters:

- Displayed Name
- Description
- IPsec Anti-Replay Window
- IPsec Keep Alive Period (s)
- IPsec Perfect Forward Secrecy
- IKE Authentication Method
- IKE SA Life Duration (s)
- IPsec SA Life Duration (s)
- IPsec SA Life Duration Bytes (Kbytes/s)
- IPsec Policy
- Pre-Shared Secret
- IPsec Tunnel Address (IPv4)
- IPsec Tunnel Subnet Mask (IPv4)
- SEG Address (IPv4)

4 Perform one of the following.

   a If you are creating an eNodeB IPsec profile and need to assign the profile to eNodeBs, click on the Apply button. The eNodeB IPsec Profile (Create) form refreshes with additional tabs and the name of the form changes to eNodeB IPsec Profile (Edit). Go to step 5.

   b If you are creating an eNodeB IPsec profile and do not need to assign the profile immediately:

      i Click on the OK button to save the eNodeB IPsec profile and close the form.

      ii When you need to assign the profile, perform this procedure to modify the IPsec profile, if required, and assign the profile to eNodeBs.

   c If you are modifying an eNodeB IPsec profile, go to step 5.

5 Click on the Distribution List tab button.

6 Configure the filter criteria, if required, and click on the Search button to generate a list of eNodeB elements that are already assigned to the eNodeB IPsec profile.

7 Click on the Delete button to remove eNodeB elements from the eNodeB IPsec profile, if required.

Note — Deleting an eNodeB from an eNodeB IPsec profile does not delete the current IPsec configuration on the eNodeB.

8 Click on the Assign eNodeBs button. The Assign and Assign Filter forms open.

9 Configure the filter criteria, if required, and click on the OK button to close the Assign Filter form and return to the Assign form.

10 Using the right and left arrows in the center of the form, move eNodeBs between the Unassigned eNodeB panel and the Assigned eNodeB panel as required.

11 Click on the OK button to close the Assign form.

12 Click on the OK button to deploy the IPsec configuration specified in the IPsec profile to the assigned eNodeBs and to close the eNodeB IPsec Profile (Edit) form.

13 Close the Manage eNodeB IPsec Profiles form.

11 — LTE RAN SON management

11.1 Overview *11-2*

11.2 Workflow *11-2*

11.3 ANR *11-3*

11.4 PCI *11-8*

11.1 Overview

The 5620 SAM provides the capability to enable, disable, and configure functions of the SON feature of the eNodeB.

3GPP self-organizing network

The eUTRAN SON is an LTE RAN feature as outlined in 3GPP specifications such as *3GPP TR 36.902*. The SON allows operators to focus time and effort on the macro level of network administration while built-in algorithms automatically negotiate optimal inter-device settings and pathways at the micro level.

You can use the 5620 SAM to enable and configure SON functions for RAN devices such as the eNodeB. RAN devices perform self-organization functions by using two features:

- ANR
- PCI

ANR is an automatic, cyclical function that automatically optimizes neighbor relations between LTE RAN devices and cells. PCI is the function that identifies cells to UE for optimal HO.

Enabling or disabling the ANR function has a direct impact on the automatic PCI allocation feature. When you disable the ANR feature for a RAN device, the 5620 SAM displays a warning message that indicates the impact on the PCI allocation. See table 11-1 for information about the relationship between ANR and PCI functions.

Table 11-1 ANR and PCI relationship

ANR enabled	PCI enabled	PCI distributed	Comment
False	False	False	N/A
False	True	False	Check is done by device
True	False	False	N/A
True	True	True	N/A

11.2 Workflow

Perform the following steps as required to manage SON features for the eNodeB with the 5620 SAM.

1. Create and manage ANR policies in the 5620 SAM and apply them to eNodeBs.
2. Enable or disable ANR on eNodeBs.
3. Reset ANR on eNodeBs.

4 Manually configure ANR settings on individual or multiple eNodeBs.

5 Enable or disable PCI on eNodeBs.

11.3 ANR

ANR is the system used by eNodeBs to automatically detect the optimal signal strength between neighboring eNodeBs and establish X2 interfaces in order to provide the best possible conditions for HO of UE. eNodeB ANR settings are managed in the 5620 SAM through the use of ANR profiles. A default ANR profile is created upon installation of the 5620 SAM, and customized profiles can be created by operators.

ANR is an automatic process, but you can perform manual adjustments by applying customized ANR profiles to specific eNodeBs and by whitelisting or blacklisting specific neighbor relations between eNodeBs. Whitelisted X2 connections are established as permanent connections between eNodeBs that are not removed by the ANR function. Blacklisted X2 connections are prevented from inclusion as valid neighbor relations.

ANR is a cyclical process that operates on a per-cell basis in active and dormant phases. When you lock a cell that is running an active ANR phase, the phase is suspended until you unlock the cell. The discovery of eNodeB neighbor relations via the ANR function results in the creation of X2 connections that are managed by the 5620 SAM.

Note — The 5620 SAM will prevent offline and online configuration changes on LA2.0 or TLA2.1 eNodeBs when ANR is enabled on the device, with the exception of setting ANR to disabled. Perform Procedure 11-1 to manually enable or disable ANR on an eNodeB.

Configuration changes are permitted on all eNodeB versions other than LA2.0 and TLA2.1 when ANR is enabled on the device.

ANR procedures

Perform the following procedures to configure the ANR feature and the associated policy object. You can configure ANR parameters by using both online and offline configuration. See the *5620 SAM LTE Parameter Reference* for descriptions of the parameters in the following procedures.

Procedure 11-1 To enable or disable the ANR feature for an eNodeB

Note — Enabling the ANR feature on an eNodeB consumes a RAN license feature entitlement token.

1 Perform one of the following:

a Perform Procedure 7-2 to open the eNodeB NE Instance form of an eNodeB.

b Perform Procedure 7-4 to use the logical objects manager to open the eNodeB NE Instance form of an eNodeB.

2 Click on the Components tab button.

3 Navigate to the Activation Service object. The path is eNodeB NE Instance→Activation Service→Activation Service ID *n*.

4 Right-click on the Activation Service object and choose Properties from the contextual menu. The Activation Service form opens.

5 Configure the anrEnable parameter to enable or disable ANR on the eNodeB.

6 Click on the OK button to close the form and return to the eNodeB NE Instance form.

7 Click on the Apply button. A confirmation form appears.

8 Click on the Yes button to confirm the changes and close the confirmation form. The changes to the Activation Service object are saved, the device resets (if applicable), and RAN license token consumption is updated.

9 Close the eNodeB NE Instance form.

Procedure 11-2 To create or modify an ANR profile

1 Choose Policies→Mobile→ANR Profile from the 5620 SAM main menu. The ANR Profiles form opens.

2 Perform one of the following.

   a Create a new ANR profile.

      i Click on the Create button. The ANR Profile (Create) form opens.

      ii Configure the parameters:

         - Profile ID
         - Auto-Assign ID

      iii Go to step 3.

   b Modify an existing ANR profile.

      i Configure the filter criteria, if required, and click on the Search button to generate a list of ANR profiles.

      ii Choose an ANR profile from the list and click on the Properties button. The ANR Profile (Edit) form opens with the General tab displayed.

      iii Go to step 3.

3 Configure the following parameters in the Automatic Neighbour Relation panel:

- Profile Name
- Description
- Active Phase Measurement Report Hysteresis
- Active Phase Measurement Report Threshold
- Dormant Phase Timer For ECGI Discovery (min)
- DRX Cycle For Report CGI
- UE Contribution In Wake Up Phase

4 Configure the following parameters in the Report Config EUTRAN panel:

- Threshold EUTRAN RSRP
- Second Threshold EUTRAN RSRP
- Threshold EUTRAN RSRQ
- Second Threshold EUTRAN RSRQ

Note — You can unset the values of the parameters in the Report Config EUTRAN panel by selecting the Clear checkboxes beside each parameter.

5 Perform one of the following.

a If you are creating a new ANR profile and wish to assign the profile to eNodeBs:

i Click the Apply button. The ANR Profile (Create) form refreshes with additional tab buttons and the name of the current form changes to ANR Profile (Edit).

ii Go to step 6.

b If you are creating a new ANR profile and do not wish to assign it immediately:

i Click on the OK button to save the profile and close the form.

ii At a later date, return to step 1 and perform this procedure again to further modify the ANR profile and assign eNodeBs to it.

c If you are modifying an existing ANR profile, go to step 6.

6 Click on the Distribution List tab button.

7 Configure the filter criteria, if required, and click on the Search button to generate a list of eNodeB elements that have already been assigned to the ANR profile.

8 Click on the Delete button to remove eNodeB instances from the ANR profile, if required.

9 Click on the Assign eNodeBs button. The Assign and Assign Filter forms open.

10 Configure the filter criteria, if required, and click on the OK button to close the Assign Filter form and return to the Assign form.

11 Using the right and left arrows in the center of the form, move eNodeBs between the Unassigned eNodeB panel and the Assigned eNodeB panel as required.

12 Click on the OK button to close the Assign form. If you have made changes, a dialog box appears.

13 Click on the OK button to accept the changes and close the dialog box.

14 Click on the OK button to close the ANR Profile (Edit) form.

15 Close the ANR Profiles form.

16 Perform Procedure 11-3 to redistribute the settings of a modified ANR profile to the assigned eNodeBs, if required.

Procedure 11-3 To redistribute an ANR policy to assigned eNodeBs

Perform this procedure to force a redeployment of the values contained by an ANR profile to the eNodeBs that are assigned to the ANR profile. This procedure is necessary only when you modify an existing ANR profile that has eNodeBs assigned to it.

1 Choose Policies→Mobile→ANR Profile from the 5620 SAM main menu. The ANR Profilse form opens.

2 Choose an ANR profile from the list and click on the Properties button. The ANR Profile (Edit) form opens with the General tab displayed.

3 Click on the Redistribute button. A dialog box appears.

4 Click on the OK button to acknowledge the warning and close the dialog box.

The ANR settings contained by the ANR profile are redistributed to the associated eNodeBs.

5 Close the ANR Profile (Edit) form.

6 Close the ANR Profiles form.

Procedure 11-4 To manually reset ANR on an eNodeB

Perform this procedure to reset the ANR of a single eNodeB.

Caution — Resetting an active ANR cycle is potentially service-affecting.

Note — Perform Procedure 7-4 to reset the ANR of multiple eNodeBs using the logical objects manager.

1 Perform one of the following:

   a Perform Procedure 7-2 to open the eNodeB NE Instance form of an eNodeB.

   b Perform Procedure 7-4 to use the logical objects manager to open the eNodeB NE Instance form of an eNodeB.

2 Click on Reset ANR in the Automatic Neighbor Relation State panel.

3 Acknowledge the warning message.

4 Click on the OK button to close the eNodeB NE Instance form.

Procedure 11-5 To configure ANR status and neighboring cell relations by using online configuration

Note — The object names and hierarchy referenced in this procedure may vary depending on the active software version of the eNodeB.

1 Perform one of the following:

   a Perform Procedure 7-2 to open the eNodeB NE Instance form of an eNodeB.

   b Perform Procedure 7-4 to use the logical objects manager to open the eNodeB NE Instance form of an eNodeB.

2 Click on the Components tab button.

3 Configure HO settings for LTE Neighboring Cell Relation objects, as required.

   i Navigate to the LTE Neighboring Cell Relation object. The path is eNodeB NE Instance→Cell→Cell ID *n*→LTE Neighboring→LTE Neighboring Name *n*→LTE Neighboring Freq Conf→LTE Neighboring Freq Conf Name *n*.

   ii Right-click on the LTE Neighboring Freq Conf Name *n* object and choose Properties from the contextual menu. The LTE Neighboring Freq Conf form opens with the General tab displayed.

   iii Click on the Components tab button.

   iv Navigate to an LTE Neighboring Cell Relation object. The path is LTE Neighboring Freq Conf→LTE Neighboring Cell Relation→LTE Neighboring Cell Relation ID *n*.

   v Right-click on the LTE Neighboring Cell Relation ID *n* object and choose Properties from the contextual menu. The LTE Neighboring Cell Relation form opens with the General tab displayed.

vi Click on the Properties button in the X2 Access ID Pointer panel. The eNodeB X2 Reference Point form opens with the General tab displayed.

vii In the Automatic Neighbor Relation panel, configure the X2 Policy parameter to specify the X2 policy setting.

viii Click on the OK button to close the eNodeB X2 Reference Point form and return to the LTE Neighboring Cell Relation form.

ix Close the LTE Neighboring Cell Relation form and the LTE Neighboring Freq Conf form.

4 Repeat step 3 for other LTE Neighboring Cell Relation objects, as required.

5 Configure ANR for X2 Access objects, as required.

i Navigate to the X2 Access object. The path is eNodeB NE Instance→X2 Access Group→X2 Access Group ID *n*→X2 Access ID *n*

ii Right-click on the X2 Access ID *n* object and choose Properties from the contextual menu. The eNodeB X2 Reference Point form opens with the General tab displayed.

iii In the Automatic Neighbor Relation panel, configure the X2 Policy parameter to set X2 listing and HO status.

iv Click on the OK button.

v Click on the OK button to close the eNodeB X2 Reference Point form and return to the eNodeB NE Instance form.

6 In the eNodeB NE Instance form, click on the OK button. A dialog box appears.

7 Click on the Yes button to close the dialog box, save the changes, and close the eNodeB NE instance form.

11.4 PCI

The PCI of an LTE cell identifies the cell for detection by UE and inclusion in the ANR function of eNodeBs. The PCI of an eNodeB is generally predetermined with the aid of a RAN planning tool and configured via WO with the 9452 WPS. The 5620 SAM resynchronizes PCI designations in the event that a PCI conflict causes the PCI of an LTE cell to change. Perform Procedure 11-6 to enable or disable PCI for an eNodeB.

PCI procedures

Perform the following procedures to configure the PCI feature.

Procedure 11-6 To enable or disable PCI on an eNodeB

Note 1 — Enabling the PCI feature on an eNodeB consumes a RAN license feature entitlement token.

Note 2 — ANR must be enabled in order for the PCI function to have an effect on eNodeB neighbor relations.

1. Perform one of the following:
   - **a** Perform Procedure 7-2 to open the eNodeB NE Instance form of an eNodeB.
   - **b** Perform Procedure 7-4 to use the logical objects manager to open the eNodeB NE Instance form of an eNodeB.
2. Click on the Components tab button.
3. Navigate to the Activation Service object. The path is eNodeB NE Instance→Activation Service→Activation Service ID *n*.
4. Right-click on the Activation Service object and choose Properties from the contextual menu. The Activation Service form opens.
5. Configure the isSonPciAllocationEnabled parameter to enable or disable PCI on the eNodeB.
6. Click on the OK button to close the form and return to the eNodeB NE Instance form.
7. Click on the Apply button. A confirmation form appears.
8. Click on the Yes button to confirm the changes and close the confirmation form. The changes to the Activation Service object are saved and RAN license token consumption is updated.
9. Close the eNodeB NE Instance form.

Procedure 11-7 To configure PCI on an eNodeB

Perform this procedure to do the following:

- Enable or disable PCI conflict correction and configure timer for automatic PCI resolution
- Add or remove entries in the PCI allowed list

Note — See 3GPP specification *TS 36.211* for more information about PCI and PCI groups.

1 Perform one of the following:

a Perform Procedure 7-2 to open the eNodeB NE Instance form of an eNodeB.

b Perform Procedure 7-4 to use the logical objects manager to open the eNodeB NE Instance form of an eNodeB.

2 Click on the Components tab button.

3 Navigate to the Automatic Physical Cell Identify object. The path is eNodeB NE Instance→Self Organizing Network→Automatic Physical Cell Identity→Automatic Physical Cell Identity ID *n*.

4 Right-click on the Automatic Physical Cell Identity ID *n* object and choose Properties from the contextual menu. The Automatic Physical Cell Identity (Edit) form opens with the General tab displayed.

5 Configure PCI conflict correction, as required:

i Configure the enableMaintenancePeriod parameter to enable or disable automatic PCI conflict correction.

ii Configure the maintenancePeriodStartTime (h) parameter to specify the timer, in hours, that the eNodeB will wait before activating automatic PCI conflict correction function.

6 Configure the PCI allowed list, as required:

Note 1 — Values in the PCI allowed list define a list of PCI values that can be used by eNodeB cells. If the list is empty, all 504 possible values are available to the eNodeB.

Note 2 — You can delete a value from the PCI allowed list by choosing the value from the list and clicking on the Delete button.

i Click on the Pci Allowed List tab button.

ii Click on the Add button. The Entry form opens.

iii Configure the Value parameter with an integer ranging from 0 to 503.

iv Click on the OK button to close the Entry form and add the PCI value to the list.

v Repeat the previous two steps to add more PCI values to the list, as required.

vi Click on the OK button to close the Automatic Physical Cell Identity (Edit) form.

7 Click on the Apply button. A confirmation window opens.

8 Confirm the changes and close the eNodeB NE Instance form.

LTE RAN maintenance

12 — LTE RAN device maintenance

13 — LTE RAN statistics

14 — LTE RAN troubleshooting

12 — LTE RAN device maintenance

12.1 Overview *12-2*

12.2 Workflow for LTE RAN maintenance *12-2*

12.3 NE maintenance preparation *12-2*

12.4 eNodeB backup and restore *12-4*

12.5 eNodeB software upgrades *12-11*

12.6 eNodeB component replacement *12-18*

12.1 Overview

The 5620 SAM includes NE maintenance functionality for supported RAN devices that allows a system administrator to:

- perform an on-demand or scheduled NE configuration backup
- perform an on-demand or scheduled eNodeB software upgrade
- view the status of a deployment, backup, or device software upgrade
- troubleshoot a failed deployment, backup, or upgrade
- support hardware maintenance activities

A 5620 SAM operator with an administrator or network element software management scope of command role can perform device configuration save, backup, or restore operations and can create policies for scheduling backups. See the *5620 SAM User Guide* for more information about backup/restore and software functionality of the 5620 SAM.

See the *5620 SAM Maintenance Guide* for information about recurring maintenance tasks that can be performed on the 5620 SAM server system.

12.2 Workflow for LTE RAN maintenance

1. Schedule or perform eNodeB software upgrades.
   - **i** Create a 5620 SAM schedule. See the *5620 SAM User Guide* for more information on creating schedules.
   - **ii** Create and modify eNodeB software upgrade policies, as required.
   - **iii** Download software images to a client station and import them to the 5620 SAM server.
   - **iv** Download software images from the 5620 SAM server to eNodeBs.
   - **v** Monitor the status of software upgrades.
   - **vi** Accept or reject software upgrades, as required.
2. Perform backup and restore operations, as required.
3. Troubleshoot eNodeB operations, events, and alarms as required using the 5620 SAM alarm window.

12.3 NE maintenance preparation

You must ensure that preparation tasks are completed prior to using the 5620 SAM to perform maintenance operations such as device configuration backup and device software upgrade.

Network preparation

Preconfiguration of user accounts and system settings is a requirement for LTE RAN device maintenance tasks.

User accounts

FTP and SFTP transfers between LTE devices and the 5620 SAM require preconfiguration of user accounts. You can use the samadmin user for FTP and SFTP transfers, or create a specialized account.

Software upgrades

LTE RAN device software upgrades are best performed as a multi-step process over a period of days or weeks. The following conditions and considerations for device software upgrades are presented as an example to aid network administrators in upgrade planning. Contact Alcatel-Lucent Customer Support before performing a software upgrade on LTE RAN devices.

Software upgrade conditions

Verify that the following conditions are true to help ensure the success of a device software upgrade.

- Login accounts are prepared for the 5620 SAM.
- Devices selected for software upgrade are managed by the 5620 SAM.
- Device downtime of several minutes is accommodated by the network plan.
- Deltas between existing parameter configurations and new parameter defaults are known and planned for.
- 9452 WPS considerations such as current 9452 WPS version and WO creation are taken into account.

Performing the software upgrade

Verify that the following conditions are true before proceeding with the software upgrade.

- Call trace sessions are not running on devices.
- Release notices and bulletins are understood by network administration.
- Software image downloads to target devices are complete.
- No critical alarms are affecting LTE RAN or ePC devices.
- No hardware configurations or feature activations are being carried out on LTE RAN or ePC devices.
- RAN licensing capacity is sufficient to accommodate the upgrade.
- WOs for newly upgrades devices are ready for deployment.
- Alcatel-Lucent Customer Support contact information is known to operators.

Network preparation procedures

Perform the following procedures to help prepare the 5620 SAM network for RAN devices.

Procedure 12-1 To assign a password to the samadmin user

The 5620 SAM installer creates a user account called samadmin that is required for 5620 SAM system administration. FTP and SFTP transfers between the 5620 SAM and the eNodeB require a password to be set for the samadmin user.

Caution 1 — Do not use the @ character in the samadmin user password. Backup file transfers will fail if the samadmin user password contains the @ character.

Caution 2 — Alcatel-Lucent strongly recommends that strict password controls are exercised for the samadmin user.

Note — Perform this procedure only if a password has not been set for the samadmin user during the 5620 SAM installation process, or if the samadmin user password contains a restricted character that impacts eNodeB operation.

1 Log in to the 5620 SAM server as the root user and open a console window.

2 Enter the following at the CLI prompt:

```
# passwd samadmin
```

The following prompt is displayed:

```
New Password:
```

3 Enter the new password and press ↵.

The following prompt is displayed:

```
Re-enter new password:
```

4 Enter the new password again and press ↵. The following message is displayed:

```
passwd: password successfully changed for samadmin
```

5 Close the console window.

12.4 eNodeB backup and restore

The 5620 SAM provides a function to backup and restore eNodeB SNMP MIB parameters only. The SNMP parameters included in eNodeB backup files are the alpha and beta transport parameters for OAM communication and hardware configuration. The gamma parameters of the eNodeB NetConf MIM are not included in eNodeB backup files.

You must perform eNodeB NE backup and restore in conjunction with configuration snapshots and WO deployment in order to capture and be able to restore the full eNodeB NE configuration. Device backups and configuration snapshots can both be configured to occur on a recurring schedule in order to provide fully automatic backup capability for the eNodeB.

Note — The Save Config (configuration save) function of the 5620 SAM is not supported for the eNodeB and the command performs no action on the device.

A default RAN-based backup and restore policy is created when the 5620 SAM is installed. The backup policy that is assigned to a device is determined by the discovery rule. See chapter 5 for more information about configuring discovery rules.

The following steps describe the recommended process for eNodeB NE backup:

1 Configure an eNodeB backup and restore policy, or use the default RAN-based backup and restore policy.

2 Assign a backup and restore policy to eNodeBs, as required.

3 Schedule recurring configuration snapshots to coincide with the scheduled backup interval specified by the assigned RAN-based backup and restore policy. See chapter 6 for more information about configuration snapshots.

The following steps describe the recommended process for eNodeB NE restore:

1 Use the 9452 WPS to convert a configuration snapshot taken by the 5620 SAM into a WO.

2 Perform Procedure 12-5 to restore the most recent backup, or perform Procedure 12-6 to restore a backup other than the most recent.

3 Perform Procedures 6-1 and 6-2 to use the activation manager to deploy the WO described in step 1 to the eNodeB. See chapter 6 for more information about using the activation manager.

The 5620 SAM holds and automatically purges device backup files according to the applicable backup policy. You can schedule configuration restores or perform them immediately.

Note 1 — You cannot restore a RAN device configuration that uses an outdated software version after performing a software upgrade on the device.

Note 2 — The Administrative State of an eNodeB is set to Locked after a successful restore operation. Perform Procedure 7-3 to unlock an eNodeB.

Backup and restore procedures

Perform the following procedures to configure and perform the backup and restore function of the 5620 SAM for the eNodeB. See the *5620 SAM Parameter Guide* for descriptions of the parameters in the following procedures.

Procedure 12-2 To create or modify a RAN backup/restore policy

1 Choose Administration→NE Maintenance→Backup/Restore from the 5620 SAM main menu. The Backup/Restore form opens with the Backup/Restore Policy tab displayed.

2 Perform one of the following.

   a Create a RAN backup/restore policy.

      i Click on the Create button. The Backup Policy (Create) form opens.

      ii Configure the parameters:

         - Auto-Assign ID
         - Policy ID

      iii Enter a name for the backup policy in the Name field.

      iv Choose eNodeB from the Policy Type drop-down menu. The form refreshes to display eNodeB-specific parameters. Go to step 3.

   b Modify a RAN backup policy.

      i Configure the filter criteria, if required, and click on the Search button to generate a list of backup policies.

      ii Choose a backup policy from the list that displays eNodeB Node as its Policy Type and click on the OK button. The Backup Policy (Edit) form opens with the General tab displayed. Go to step 3.

3 Specify whether backup functionality is enabled.

   a Select the Enable Backup check box.

   b Deselect the Enable Backup check box. Go to step 7.

4 In the Backup Triggering panel, configure the parameters:

   - Scheduled Backup Scheme
   - Scheduled Backup Interval
   - Scheduled Backup Sync Time
   - Scheduled Backup Threshold (operations)
   - Auto Backup Threshold (operations)

5 In the Backup Purging panel, configure the parameters:

   - Auto Purge Scheme
   - Number Of Backups
   - Maximum Backup Age (days)

6 In the eNodeB Backup Settings panel, configure the following parameters:

- SFTP/FTP User ID
- SFTP/FTP Password

Note 1 — You must enter the samadmin user as the SFTP/FTP User ID and the samadmin user password as the SFTP/FTP Password.

Note 2 — Backup file transfers from the eNodeB to the 5620 SAM will fail if the samadmin password contains the @ character. Perform Procedure 12-1 to set a new password for the samadmin user.

Note 3 — The Root Directory parameter (read-only) specifies a temporary location for the device backup files. Perform Procedure 12-4 to specify an additional location for device backup files on the 5620 SAM server.

7 Perform one of the following:

a If you are creating a new backup policy and need to assign the policy to eNodeBs, click on the Apply button. The Backup Policy (Create) form refreshes with additional tabs and the name of the form changes to Backup Policy (Edit). Go to step 8.

b If you are creating a new backup policy and do not need to assign it immediately:

i Click on the OK button to save the backup policy and close the form.

ii When you need to assign the backup policy, perform this procedure to modify the backup policy, if required, and assign the policy to eNodeBs.

c If you are modifying an existing backup policy, go to step 8.

8 Click on the Backup/Restore Policy Assignment tab button. The Backup Policy Filter opens.

9 Configure the filter criteria, if required, and click on the OK button to close the Backup Policy Filter form.

10 Using the right and left arrows in the center of the form, move eNodeBs between the Unassigned Sites panel and the Assigned Sites panel as required.

11 Click on the Apply button. A confirmation dialog appears.

12 Click on the Yes button to confirm the action, assign the backup policy to the selected eNodeBs, and close the dialog.

13 Perform one of the following.

a Close the Backup/Restore form.

b Monitor backup and restore status as required. See the *5620 SAM User Guide* for more information on the backup and restore functionality of the 5620 SAM.

Procedure 12-3 To delete a backup/restore policy

Perform this procedure to delete a custom backup/restore policy.

Note 1 — You cannot delete a default backup/restore policy.

Note 2 — You cannot delete a policy if it is currently assigned to a device.

1 Choose Administration→NE Maintenance→Backup/Restore from the 5620 SAM main menu. The Backup/Restore form opens with the Backup/Restore Policy tab displayed.

2 Choose a backup/restore policy from the list and click on the Delete button. A confirm form opens.

3 Click on the Yes button. The backup/restore policy is deleted.

4 Close the Backup/Restore form.

Procedure 12-4 To configure the 5620 SAM to save RAN device configuration backups on a file system

Perform this procedure to configure the 5620 SAM to save RAN device configuration backups as files in addition to saving them to the specified FTP/SFTP server.

Caution — Modify only the parameters specified in this procedure. Unauthorized modification of the nms-server.xml file can seriously affect network management and 5620 SAM performance.

Note 1 — The samadmin user requires read and write permissions to each directory specified in this procedure.

Note 2 — The Solaris command lines in this procedure use the # symbol to represent the command prompt. The actual prompt may differ, depending on the type of command shell that is in use. Do not type the # symbol when entering a command.

1 Log in to the 5620 SAM server station as the samadmin user.

2 Navigate to the 5620 SAM server configuration directory, typically /opt/5620sam/server/nms/config.

3 Create a backup copy of the nms-server.xml file.

4 Open the nms-server.xml file using a plain-text editor.

5 Search for the following XML tag:

```
<RanBackup
```

6 Enable file-system storage for backups of RAN devices by modifying the following line:

```
RanBackupDirectory="path"
```

where *path* is an absolute or relative file path

Note — A relative file path that you specify in this step is relative to the *installation_directory*/nms/bin directory on the 5620 SAM server.

7 Save and close the nms-server.xml file.

8 Navigate to the 5620 SAM server binary directory, typically /opt/5620sam/server/nms/bin.

9 Enter the following command at the prompt:

```
# ./nmsserver.bash read_config ↵
```

The 5620 SAM main server reads the nms-server.xml file and puts the configuration change into effect. Subsequent RAN device configuration backups are saved to the path specified in the nms-server.xml file.

Procedure 12-5 To perform an immediate eNodeB backup or restore

When you start an immediate backup, you back up the device configuration based on the backup policy associated with the eNodeB. An eNodeB configuration restore operation uses the most recently backed-up eNodeB configuration file unless otherwise specified. See Procedure 12-6 for more information about restoring a device configuration that is not the most recent.

Note — The Administrative State of an eNodeB is set to Locked after a successful restore operation. Perform Procedure 7-3 to unlock an eNodeB.

The following conditions must be present before you can perform a device configuration backup, restore, or configuration save:

- You have a 5620 SAM user account with an administrator or network element software management scope of command role or a scope of command role with write access to the mediation package. See the *5620 SAM User Guide* for more information.
- FTP or SFTP is configured in the mediation policy for the eNodeB. See chapter 5 for more information.

Depending on the operation type, the Backup State or Restore State column displays the current state of the operation. The possible values are:

- Not Attempted - the operation is unattempted
- Saving Config - the device configuration is being saved on the device
- Transferring files - a file transfer is in progress

- Success - the operation is complete and successful
- Failure - the operation is complete but unsuccessful

Note — During a backup, if a device is unresponsive to the 5620 SAM because SNMP on the device is disabled, the Backup State column entry for the device does not immediately display the correct value of Failed. This latency is caused by the inability of the 5620 SAM to communicate with the unresponsive device. In such a situation, the Backup State column displays the initial value of Saving Config until three 10-minute SNMP polling periods, or 30 minutes, have elapsed, after which the Backup State changes to Failed if SNMP remains disabled.

1 Choose Administration→NE Maintenance→Backup/Restore from the 5620 SAM main menu. The Backup/Restore form opens with the Backup/Restore Policy tab displayed.

2 Click on the Backup/Restore Status tab button. The managed devices are listed.

3 Select an eNodeB from the list and perform one of the following steps, depending on the operation that you want to perform.

a Click on the Backup button.

b Click on the Restore button.

A confirm form opens.

4 Click on the Yes button. The backup or restore operation starts, and the current backup or restore state for the device is indicated in the Backup State or Restore State column.

5 You can resynchronize an NE with the 5620 SAM database, if required, by clicking on the Resync button. See the *5620 SAM User Guide* for more information about resynchronizing NEs.

6 Close the Backup/Restore form.

Procedure 12-6 To restore a device configuration backup other than the most recent

You can choose to restore an older version of the eNodeB configuration to meet special network requirements.

Caution 1 — Older backups do not have the most recent network information. Restoring an older device configuration may be service-affecting.

Caution 2 — Ensure that you back up the current device configuration using Procedure 12-2 before you proceed.

1. Choose Administration→NE Maintenance→Backup/Restore from the 5620 SAM menu. The Backup/Restore form opens.
2. Click on the Backup/Restore Status tab. The managed devices are listed.
3. Double-click on a device from the list. The NE Backup/Restore Status form for the selected device opens.
4. Click on the Backups tab button. A list of configuration backups for the selected device opens, ordered from the oldest to the most recent.
5. Select a backup in the list and click on the Restore button. A dialog box appears.
6. Click on the Yes button.
7. Click on the Resync button to ensure the latest network information is available, if required.
8. Close the Backup/Restore form.

12.5 eNodeB software upgrades

This section describes software maintenance operations and procedures designed specifically for the eNodeB. Software upgrade support for RAN devices uses the existing function of the 5620 SAM for software management. When a new eNodeB software version is available, you can use the 5620 SAM to perform an on-demand eNodeB software upgrade, or schedule one using a software upgrade policy.

Software management of the eNodeB with 5620 SAM requires you to do the following:

1. Download software images from the ALED website to a 5620 SAM client station.
2. Upload software images to the 5620 SAM server.
3. Schedule device software upgrades with a software upgrade policy, or perform device software upgrades manually.
4. Monitor software upgrade status.
5. Accept or reject software upgrades, as required.

eNodeB software upgrade policies

A default eNodeB software upgrade policy is created when the 5620 SAM is installed. Unless specified in the discovery rules that add eNodeBs to the network, the default eNodeB software upgrade policy is assigned to all eNodeBs upon discovery by the 5620 SAM. You cannot delete a software upgrade policy that is assigned to an eNodeB. You cannot perform an in-service software upgrade for an eNodeB. An eNodeB software upgrade policy includes the following information:

- FTP and SFTP configurations and credentials
- software version fallback timers
- automatic activation settings

SFTP is used by the software upgrade policy as the primary source for the software image file. FTP is used as the fallback source.

eNodeB software images

RAN device software images are available at the ALED website. You can access the ALED website at the following address:

`https://download.support.alcatel-lucent.com`

Software images are downloaded as .gz files that must be uncompressed on a client station before being uploaded to the 5620 SAM server. It is recommended that you create a new directory for the extracted files. The following directories and subdirectories are created when you uncompress the image files:

- *path*/DELIVERY/ENODEB/*eNodeB software image identifier*
- *path*/DESCRIPTION/ENODEB

where

path is the directory where you uncompressed the .gz file

eNodeB software image identifier is the version designation of the software image, such as ENBLA0200D60E06601

The DELIVERY directory and subdirectories contain the software image data that is transferred to the 5620 SAM server. The DESCRIPTION/ENODEB directory contains an XML description file. The description file is the file that you must select for import to the 5620 SAM server in Procedure 12-8. The contents of the DELIVERY/ENODEB directory are automatically uploaded to the 5620 SAM server and stored in the database when you import the description file. Therefore, you must maintain the relative directory structure of the uncompressed software image files on your client station for the image upload to be successful.

eNodeB software upgrade procedures

You can use the 5620 SAM to perform an immediate NE software upgrade or schedule one using a software upgrade policy. You can create and configure multiple eNodeB software upgrade policies and assign them to multiple eNodeBs.

See the *5620 SAM User Guide* for more information about the software upgrade function of the 5620 SAM. See the *5620 SAM Parameter Guide* for descriptions of the parameters in the following procedures.

Procedure 12-7 To create an eNodeB software upgrade policy

1 Choose Administration→NE Maintenance→Software Upgrade from the 5620 SAM main menu. The Software Upgrade form opens.

2 Perform one of the following.

   a Create a software upgrade policy.

      i Click on the Create button. The Software Upgrade Policy (Create) form opens.

      ii Configure the parameters:

         - Policy ID
         - Auto-Assign ID

      iii Choose eNodeB Node from the Policy Type drop-down menu. The eNodeB Based Setting panel appears at the bottom of the form. Go to step 3.

   b Modify an existing software upgrade policy.

      i Configure the filter criteria, if required, and click on the Search button to generate a list of software upgrade policies.

      ii Choose a software upgrade policy from the list and click on the Properties button. The Software Upgrade Policy (Edit) form opens with the General tab displayed.

      iii Go to step 3.

3 Configure the parameters:

- Name
- FTP User ID
- FTP Password
- FTP Server Port
- SFTP User ID
- SFTP Password
- SFTP Server Port
- FTP/SFTP Server IP
- Timer to Wait for Fallback to Previous Software Version (min)
- Timer to Wait for Fallback to Previous IP version (min)
- Transfer Protocol

Note 1 — You must enter an IP address for the SFTP/FTP Server IP parameter that is reachable by the eNodeBs, such as the IP address that the 5620 SAM uses to receive SNMP traps from NEs.

Note 2 — The samadmin user and password must be used for SFTP User ID and SFTP Password if you are using SFTP.

4 Select the Auto-Activate After Successful File Transfer check box, if required.

5 Perform one of the following:

a If you are creating a new software upgrade policy and need to assign the policy to eNodeBs, click on the Apply button. The Software Upgrade Policy (Create) form refreshes with additional tabs and the name of the form changes to Software Upgrade Policy (Edit). Go to step 6.

b If you are creating a new software upgrade policy and do not need to assign it immediately:

i Click on the OK button to save the software upgrade policy and close the form.

ii When you need to assign the software upgrade policy, perform this procedure to modify the policy, if required, and assign the policy to eNodeBs.

c If you are modifying an existing software upgrade policy and need to assign the policy to eNodeBs, go to step 6.

6 Assign the software upgrade policy as required.

i Click on the Software Upgrade Policy Assignment tab button. The Software Upgrade Policy Filter form opens.

ii Configure the filter settings and click on the OK button to apply the filter. Applying a blank filter brings up a list of all discovered devices.

Note — Alcatel-Lucent does not recommend assigning an eNodeB software upgrade policy to non-RAN devices.

iii Using the right and left arrows in the center of the form, move eNodeBs between the Unassigned eNodeB panel and the Assigned eNodeB panel as required.

iv Click on the Apply button and acknowledge the message in the dialog box to assign the software upgrade policy to the devices listed in the Assigned Sites panel.

7 Close the Software Upgrade Policy (Edit) form. The new policy is displayed in the Software Upgrade form.

Procedure 12-8 To import an eNodeB software image into the 5620 SAM

This procedure assumes that you have downloaded and uncompressed an eNodeB software image .gz file to a known directory on a single-user client or client delgate server station, and are aware of the location of the XML description file..

Note 1 — You must preserve the directory structure of extracted software image files.

Note 2 — The samadmin user must have file permissions for software images stored on the 5620 SAM delegate server.

Software images uploaded to the 5620 SAM server are stored in the database.

1 Choose Administration→NE Maintenance→Software Upgrade from the 5620 SAM main menu. The Software Upgrade form opens with the Software Upgrade Policy tab displayed.

2 Click on the Software Images tab button.

3 Click on the eNodeB Software Images tab button.

4 Click on the Import button. The Select eNodeB Import Description File window opens.

5 Navigate to the DESCRIPTION/ENODEB directory that contains the appropriate software image description XML file.

6 Choose the description file and click on the Open button.

The software image appears in the list with In Progress displayed in the Storing Image in DB column. The upload is complete when the status in this column displays as Done.

Procedure 12-9 To perform an immediate software upgrade on an eNodeB

The following conditions must be true before you attempt an eNodeB software upgrade:

- You must have a 5620 SAM user account with an administrator or network element software management scope of command role, or a scope of command role with write access to the mediation package.
- FTP or SFTP is configured in the mediation policy for the device. See chapter 5 for more information.

1 Choose Administration→NE Maintenance→Software Upgrade from the 5620 SAM main menu. The Software Upgrade form opens.

2 Click on the Software Images tab button. The form refreshes with additional tabs.

3 Click on the RAN eNodeB Software Images tab button.

4 Transfer software images from the 5620 SAM to the selected eNodeBs.

i Click on the Download Image button. The Select Sites form opens.

ii Choose one or more eNodeBs from the list and click on the OK button to begin the transfer and close the form.

Note — The 5620 SAM monitors download progress automatically. If SNMP traps from the eNodeB are not being sent and download status does not update, click on the Check Download Progress button to force a check.

5 Schedule image downloads, if required.

i Click on the Schedule Download Image button. The SAM Schedule (Create) form opens with the General tab displayed.

ii Configure the scheduling information. See the *5620 SAM User Guide* for more information on using the 5620 SAM scheduler.

6 Abort image downloads by clicking on the Abort Image Download button, as required.

7 Delete images by clicking on the Delete button, as required.

8 Activate software images and monitor activation progress.

i Click on the Activate Image button. The Select Sites form opens.

ii Choose one or more eNodeBs from the list and click on the OK button to activate the image and close the form.

Note — The 5620 SAM monitors activation progress automatically. If SNMP traps from the eNodeB are not being sent and activation status does not update, click on the Check Activate Progress button to force a check.

9 Accept the software image and finalize the software upgrade, as required.

   i Click on the Accept Image button. The Select Sites form opens.

   ii Choose one or more eNodeBs from the list and click on the OK button to accept the image and close the form.

10 Reject the software image and reverse the software upgrade, if required.

Note — Rejecting a software image effectively performs a software downgrade on the eNodeB, forcing it to revert to the previous software version.

   i Click on the Reject Image button. The Select Sites form opens.

   ii Choose one or more eNodeBs from the list and click on the OK button to reject the image and close the form.

Procedure 12-10 To monitor software upgrade status

1 Choose Administration→NE Maintenance→Software Upgrade from the 5620 SAM main menu. The Software Upgrade form opens.

2 Click on the Software Upgrade Status tab button.

3 Click on the eNodeB Upgrade Status tab button.

4 Configure the filter criteria, if required, and click on the Search button to generate a list of eNodeBs.

5 Perform the following steps, as required.

   a Activate software images by clicking on the Activate button.

   b Accept software upgrades by clicking on the Accept button.

   c Reject software upgrades and revert to the previously installed software version by clicking on the Reject button.

   d Reload software images by clicking on the Reload button.

   e Abort software upgrades that are in progress by clicking on the Abort button.

Procedure 12-11 To delete an eNodeB software image from the 5620 SAM server

1 Choose Administration→NE Maintenance→Software Upgrade from the 5620 SAM main menu. The Software Upgrade form opens.

2 Click on the Software Images tab button.

3 Click on the eNodeB Software Images tab button.

4 Choose an eNodeB software image from the list and click on the Delete button.

5 Close the Software Upgrade form.

12.6 eNodeB component replacement

Device hardware maintenance for the eNodeB generally involves the replacement of device components. Device component replacement requires a series of coordinated tasks to be performed by on-site technicians and 5620 SAM network operators in order to resolve hardware issues with minimal impact to network traffic and service availability.

Hardware maintenance tasks as described in this section apply to the following components of the eNodeB BBU:

- RUC/fan tray
- eCCM-U

Sample workflow for an eNodeB RUC/fan tray replacement

The following workflow describes an example of the typical tasks performed by on-site technicians and 5620 SAM operators during an eNodeB RUC/fan tray component replacement operation. See the *Alcatel-Lucent 9926 Base Band Unit | Release LAx.x/TLAx.x BBU Maintenance Guide 418-000-404* for more information about the following process.

1 The on-site technician informs the 5620 SAM operators that a RUC/fan tray component replacement operation is about to begin for an eNodeB. The 5620 SAM operators lock the appropriate eNodeB. Perform Procedure 7-3 to lock an eNodeB.

2 If the on-site technician determines that the eNodeB SNMP MIB can be backed up, then the technician performs a local backup of the SNMP MIB by using a 9400 NEM LMT.

3 The on-site technician performs the component replacement.

4 The on-site technician informs the 5620 SAM operators that the component replacement is complete. The 5620 SAM operators unlock the appropriate eNodeB. Perform Procedure 7-3 to unlock an eNodeB.

5 The on-site technician performs one of the following tasks:

- The on-site technician restores the SNMP MIB if it was successfully backed up.
- The on-site technician recommissions the eNodeB if the SNMP MIB was not backed up.

6 The 5620 SAM operators verify that the eNodeB is operational and that there are no alarms relating to the replaced component.

Sample workflow for an eNodeB eCCM-U replacement

The following workflow describes an example of the typical tasks performed by on-site technicians and 5620 SAM operators during an eNodeB eCCM-U component replacement operation. See the *Alcatel-Lucent 9926 Base Band Unit | Release LAx.x/TLAx.x BBU Maintenance Guide 418-000-404* for more information about the following process.

1. The on-site technician informs the 5620 SAM operators that an eCCM-U component replacement operation is about to begin for an eNodeB. The 5620 SAM operators lock the appropriate eNodeB. Perform Procedure 7-3 to lock an eNodeB.
2. If the on-site technician determines that the eNodeB SNMP MIB can be backed up, then perform one of the following:
   - The technician performs a local backup of the SNMP MIB by using a 9400 NEM LMT (recommended).
   - The 5620 SAM operators remotely perform an immediate backup of the SNMP MIB by using the backup function of the 5620 SAM. See Procedure 12-5 for more information about performing immediate backups.
3. The on-site technician performs the component replacement.
4. The on-site technician informs the 5620 SAM operators that the component replacement is complete. The 5620 SAM operators unlock the appropriate eNodeB. Perform Procedure 7-3 to unlock an eNodeB.
5. The on-site technician performs one of the following tasks:
   - The on-site technician restores the SNMP MIB if it was successfully backed up.
   - The on-site technician recommissions the eNodeB if the SNMP MIB was not backed up.
6. The 5620 SAM operators initiate a reconfigure action on the eNodeB by performing Procedure 14-4.
7. The 5620 SAM operators verify that the eNodeB is operational and that there are no alarms relating to the replaced component.

13 — LTE RAN statistics

13.1 Overview *13-2*

13.2 Workflow *13-2*

13.3 eNodeB performance management statistics *13-2*

13.4 LTE statistics configuration *13-7*

13.1 Overview

This chapter describes the process for collecting and viewing eNodeB performance management statistics counters. Performance management statistics are collected at regular, configurable intervals from eNodeBs by the 5620 SAM server in the form of compressed files that can be transferred via FTP. You can view and plot eNodeB performance management statistics by using the historical plotting function of the 5620 SAM. Retrieval of individual performance management counters from the eNodeB via OSS interface is not supported.

13.2 Workflow

1. Create or modify RAN performance management policies.
2. Assign eNodeBs to performance management policies.
3. Set the Administrative Status of performance management policies to Up, which enables performance management collection.
4. Configure statistics data catch-up and synchronization, as required.
5. View eNodeB performance management statistics using the plotting function of the 5620 SAM.

13.3 eNodeB performance management statistics

This section describes the collection of eNodeB performance management statistics by the 5620 SAM.

See the *Alcatel-Lucent 9412 eNodeB | Release LAx.x Counters Reference Guide 418-000-035* for a listing of eNodeB performance management counters. See Appendix A for a listing of eNodeB performance management counters as they are represented in the 5620 SAM.

Statistics collection overview

The eNodeB automatically starts recording performance management statistics when commissioned and continues record the statistics indefinitely. The eNodeB collects statistics by storing counters in its memory and writing the counters to a file approximately 30 s after the end of the defined collection interval, depending on network traffic levels.

The recorded statistics file is compressed and mediated to the SNMP interface of the eNodeB. The 5620 SAM retrieves the statistics file from the eNodeB via SNMP at the end of the collection interval that is defined in the RAN performance management policy.

Note 1 — The 5620 SAM and managed eNodeBs must use a common time-synchronization server that runs a protocol such as NTP. The retrieval of eNodeB PM statistics files by the 5620 SAM will fail when the eNodeB and 5620 SAM real-time clocks are not synchronized.

Note 2 — You can configure the block size for SNMP PM statistics file transfers. Alcatel-Lucent recommends setting the block size to 6000 bytes. Perform Procedure 13-2 to set the maximum block size for PM statistics file transfers from an eNodeB to the 5620 SAM.

The default collection interval for statistics files is 15 min. Statistics are collected and sent even when no counter changes are occurring on an eNodeB. Any failure to receive statistics files from an eNodeB with an active performance management policy will cause an alarm in the 5620 SAM.

eNodeB statistics storage on the 5620 SAM server

The eNodeB performance management files are stored in the following directory on the 5620 SAM server:

base directory/lte/stats/*date*/eNodeB/*eNodeB name* directory

where

base directory is the 5620 SAM base directory, typically opt/5620sam

date is the date of performance management collection

eNodeB name is the name of the eNodeB

An eNodeB performance management file name has the following format:

```
A[YYYYMMDD].[start time][offset]-[end time][offset]_eNodeB-[eNodeB
name]
```

where

YYYYMMDD is the collection date of the first record in the file

start time is the collection start time in the format HHMM and *offset* is the offset from UTC in the format *signHHMM* for example, +0300

end time is the collection end time in the format HHMM and *offset* is the offset from UTC in the format *signHHMM* for example, +0300

eNodeB name is the name of the eNodeB

Viewing eNodeB performance management statistics

Operators can view RAN performance management statistics using the statistics plotting framework of the 5620 SAM. Perform Procedure 13-3 to view the collected performance management statistics of an eNodeB. For more information about viewing performance management statistics using the 5620 SAM, see the *5620 SAM Statistics Management Guide*.

RAN performance management statistics procedures

Perform the following procedures to configure the 5620 SAM to collect RAN performance management statistics. See the *5620 SAM Parameter Guide* for descriptions of the parameters in the following procedures. See the *5620 SAM LTE Parameter Reference* for descriptions of eNodeB NE objects and parameters.

Procedure 13-1 To create or modify an eNodeB performance management policy

Note — The default value for the Administrative State parameter for a RAN performance management policy, including the default policy, is Down. Set the Administrative State to Up to activate statistics collection.

1 Choose Tools→Statistics→RAN Performance Management Policies from the 5620 SAM main menu. The RAN Performance Management Policies form opens.

2 Perform one of the following.

a Create an eNodeB performance management policy.

i Click on the Create button. The eNodeB Performance Management Policy (Create) form opens.

ii Configure the parameters:

- Policy ID
- Auto-Assign ID

iii Go to step 3.

b Modify an eNodeB performance management policy.

i Configure the filter criteria, if required, and click on the Search button to generate a list of eNodeB performance management policies.

ii Choose an eNodeB performance management policy from the list and click on the Properties button. The eNodeB Performance Management Policy (Edit) form opens. Go to step 3.

3 Configure the parameters:

- Displayed Name
- Description
- Administrative State
- Collection Interval (min)

4 Perform one of the following.

   a If you are creating an eNodeB performance management policy and need to assign the policy to eNodeBs, click on the Apply button. The eNodeB Performance Management Policy (Create) form refreshes with additional tabs and the name of the form changes to eNodeB Performance Management Policy (Edit). Go to step 5.

   b If you are creating an eNodeB performance management policy and do not need to assign the policy immediately:

      i Click on the OK button to save the eNodeB performance management policy and close the form.

      ii When you need to assign the policy, perform this procedure to modify and assign the eNodeB performance management policy to eNodeBs.

   c If you are modifying an eNodeB performance management policy, go to step 5.

5 Click on the eNodeB Elements tab button.

6 Configure the filter criteria, if required, and click on the Search button to generate a list of eNodeB elements that are already assigned to the RAN performance management policy.

7 Click on the Assign eNodeBs button. The Assign and Assign Filter forms open.

8 Configure the filter criteria, if required, and click on the OK button to close the Assign Filter form and return to the Assign form.

9 Using the right and left arrows in the center of the form, move eNodeBs between the Unassigned eNodeB panel and the Assigned eNodeB panel as required.

10 Click on the Apply button to deploy the eNodeB performance management policy to the assigned eNodeBs.

11 Click on the Cancel button to close the Assign form.

12 Click on the OK button to close the eNodeB Performance Management Policy (Edit) form.

13 Close the RAN Performance Management Policies form.

Procedure 13-2 To set the performance management maximum SNMP block size for an eNodeB

Perform this procedure to configure the block size for the transmission of performance management statistics files from the eNodeB to the 5620 SAM.

Note — Alcatel-Lucent recommends setting a value of 6000 for the PM Max Result String Block Size (bytes) parameter in order to optimize network performance in the retrieval of PM statistics files from eNodeBs.

1 Perform Procedure 7-1 to open the ENB Equipment properties form for an eNodeB.

2 In the Performance Management panel, enter a value in the PM Max Result String Block Size (bytes) field. The recommended value is 6000.

3 Click on the OK button to close the ENBEquipment form.

4 Click on the OK button. A dialog box appears.

5 Click on the Yes button to close the dialog box and save the changes.

Procedure 13-3 To view eNodeB object statistics

Perform this procedure to access the Statistics tab of the ENB Equipment form and use the statistics plotter to historically plot eNodeB EUTRAN PM object statistics. See the *5620 SAM Statistics Management Guide* for more information about using the plotter function of the 5620 SAM.

Note — The 5620 SAM can only plot historical performance management data for the eNodeB. Real-time plotting is not available.

1 Perform Procedure 7-1 to open the ENB Equipment properties form for an eNodeB.

2 Click on the Statistics tab button.

3 Choose an EUTRAN PM object from the drop-down list.

4 Perform one of the following:

   a Choose a time filter from the drop-down list.

   b Click on the filter icon and configure an advanced filter. See the *5620 SAM User Guide* for more information about performing advanced searches and creating advanced filters.

5 Click on the Plotter button and choose New Plot from the drop-down menu. The Statistics Plotter form opens.

6 Perform the following tasks by using the statistics plotter, as required:

- Plot the performance management statistics for EUTRAN PM objects.
- Add additional objects to the statistics plot.
- Save the statistics graph results as an image file.
- Save the statistics table results as an HTML or CSV file.

7 Perform the following tasks for managing statistics records, as required:

- Configure the statistics collection policies for EUTRAN PM objects.
- Delete statistics records.

13.4 LTE statistics configuration

This section describes 5620 SAM server functions that facilitate LTE PM statistics management.

LTE PM statistics catch-up

When performance management catch-up is enabled on the 5620 SAM main server, the 5620 SAM will retrieve any performance management statistics files that have been missed within the time frame specified by the catchUpInterval property. The 5620 SAM determines that statistics file catch-up is required when, for example, missed statistics intervals are identified at main server startup, or a link is lost and subsequently restored between the eNodeB and the 5620 SAM.

Perform Procedure 13-4 to enable PM statistics catch-up.

LTE PM statistics synchronization

Redundant installations of the 5620 SAM can be configured to allow replication and synchronization of PM statistics files to the auxiliary and backup auxiliary servers. PM statistics file synchronization is disabled by default, and can be enabled and configured by setting the values of the following properties in the nms-server.xml file:

- diskUsageThreshold—Specifies the percentage threshold for disk space usage. A minor alarm is raised by the 5620 SAM when the threshold is crossed. Setting the value to 0 will disable the property.
- lteStatsSyncEnabled—Specifies whether LTE statistics synchronization is enabled.
- lteStatsSyncInterval—Specifies the number of minutes between each file synchronization.
- purgeDiskUsageThreshold—Specifies the percentage threshold for PM statistics files to be purged. A critical alarm is raised by the 5620 SAM when the threshold is crossed. Setting the value to 0 will disable the property.
- timeToKeepFile—Specifies the time in minutes that PM statistics files are kept. The minimum value is 60.

Perform Procedure 13-5 to enable and configure PM statistics file synchronization.

Statistics configuration procedures

Perform the following procedures to configure statistics collection for LTE devices.

Procedure 13-4 To enable performance management statistics catch-up on the 5620 SAM

Caution — Modify only the parameters specified in this procedure. Unauthorized modification of the nms-server.xml file can seriously affect network management and 5620 SAM performance.

Note — For complex installations of the 5620 SAM, you do not need to enable the performance management catch-up function on the auxiliary server(s).

1 Open a console window and log into the 5620 SAM main server as the samadmin user.

2 Navigate to the server configuration directory, typically /opt/5620sam/server/nms/config.

3 Open the nms-server.xml file by using a plain-text editor.

4 Add the following lines of text to the nms-server.xml file:

```
<statsCatchup

enableCatchup="true"

catchUpInterval="4320" />
```

where

The value of enableCatchup specifies whether the function is enabled.

The value of catchUpInterval specifies the period of time, in mins, for which the 5620 SAM will retrieve missing performance management files. The recommended default value is 4320, which equals 72 hours.

Note — You must set the value of the catchUpInterval property to an equal or lower value than the value of the timeToKeepFile property, as the effective value of the catchUpInterval property is limited by the timeToKeepFile property. See section 13.4 for more information about the timeToKeepFile property.

5 Save and close the nms-server.xml file.

6 Navigate to the server binary directory, typically /opt/5620sam/server/nms/bin.

7 Enter the following at the prompt as the samadmin user:

```
# ./nmsserver.bash read_config ↵
```

The main server reads the nms-server.xml file and changes to the file are updated in the 5620 SAM.

Procedure 13-5 To configure PM statistics synchronization on a redundant installation of the 5620 SAM

See the beginning of this section for information about the properties described in this procedure.

Caution — Modify only the parameters specified in this procedure. Unauthorized modification of the nms-server.xml file can seriously affect network management and 5620 SAM performance.

1. Open a console window and log into the 5620 SAM main server as the samadmin user.
2. Navigate to the server configuration directory, typically /opt/5620sam/server/nms/config.
3. Open the nms-server.xml file by using a plain-text editor.
4. Locate the following XML tag:

   ```
   <lteStats
   ```

5. Configure the following properties:
   - diskUsageThreshold
   - lteStatsSyncEnabled
   - lteStatsSyncInterval
   - purgeDiskUsageThreshold
   - timeToKeepFile
6. Save and close the nms-server.xml file.
7. Navigate to the server binary directory, typically /opt/5620sam/server/nms/bin.
8. Enter the following at the prompt:

   ```
   # ./nmsserver.bash read_config ↵
   ```

   The main server reads the nms-server.xml file and changes to the file are updated in the 5620 SAM.

14 — LTE RAN troubleshooting

14.1 Overview *14-2*

14.2 Event logging *14-2*

14.3 Device configuration and database troubleshooting *14-4*

14.4 Call trace *14-8*

14.1 Overview

The 5620 SAM provides troubleshooting support that is specific to the eNodeB. You can use the 5620 SAM to perform the following troubleshooting tasks for eNodeB NEs:

- View the events log for an eNodeB.
- Detect and fix eNodeB configuration errors.
- Troubleshoot network traffic problems by using the call trace function.

14.2 Event logging

The eNodeB events log records a fault, event, and state change history for an eNodeB. Alarms and events (alarms with a severity of notApplicable) are equally included in the events log. Logged events are maintained in the 5620 SAM database according to the active log policy for the device. The events log displays entries for the following events:

- attribute value changes
- communications alarms
- environmental alarms
- equipment alarms
- device resets
- integrity violations
- miscellaneous events
- relationship changes
- state changes
- object creation events
- object deletion events
- operational violations
- physical violations
- processing error alarms
- quality of service alarms
- security service violations
- time domain violations
- unknown events

See Procedures 14-1 and 14-2 for more information about viewing the events log and configuring the active log policy. See the *5620 SAM LTE Alarm Reference* for more information about LTE domain alarms and eNodeB alarms and events.

Event logging procedures

Perform the following procedures to troubleshoot by using the events log.

Procedure 14-1 To view the events log for an eNodeB

1. Perform Procedure 7-1 to open the ENB Equipment properties form of an eNodeB.
2. Click on the Events Log tab button.
3. Configure the filter criteria, if required, and click on the Search button to generate a list of logged events.

Procedure 14-2 To configure the event log policy for an eNodeB

1 Perform Procedure 7-1 to open the ENB Equipment properties form of an eNodeB.

2 Click on the Events Log tab button.

3 Click on the Log Policy button. The Statistics Policy - lte.Events Log form opens.

4 Configure the following parameters:

- Retention Time (hours)
- Administrative State

5 Click on the OK button. A confirmation form opens.

6 Click on the Yes button to confirm the changes.

7 Close the ENB Equipment form.

Procedure 14-3 To purge the statistics records

Perform this procedure to purge the events log of a set of events according to an advanced filter. See the *5620 SAM User Guide* for more information about performing advanced searches and creating advanced filters.

1 Perform Procedure 7-1 to open the ENB Equipment properties form of an eNodeB.

2 Click on the Events Log tab button.

3 Click on the Log Policy button.

4 Click on the Purge Statistics Records button. The Statistics Policy - Lte.Events Log Filter form opens.

5 Perform one of the following:

a Define filter criteria to specify the event type or types that will be purged. Go to step 6.

b Load an existing filter:

i Click on the Saved Filters button. The Saved Filters form opens.

ii Choose a filter from the list and click on the Load button. The Saved Filters form closes and the filter criteria is displayed in the Statistics Policy - Lte.Events Log Filter form.

iii Go to step 6.

6 Click on the OK button. A confirmation form opens.

7 Click on the Yes button to confirm the delete action and purge the statistics record in accordance to the defined filter criteria.

8 Close the Statistics Policy - Lte.Events Log form.

9 Close the ENB Equipment form.

14.3 Device configuration and database troubleshooting

The 5620 SAM tracks eNodeB configuration change events by monitoring a change counter on the device. The 5620 SAM interprets eNodeB configuration and database errors by comparing the counter value on the device against the value in the 5620 SAM database. The 5620 SAM can set an eNodeB into the following three error states based on change counter values:

- configuration misalignment
- database fallback
- database corruption

Note — The Resync button in the device Properties form and the Discovery Manager form is dimmed when an eNodeB is in one of the three error states listed above. You must resolve the error state by performing one of the procedures in this section before you can resynchronize an eNodeB by using the standard 5620 SAM resynchronization function.

Configuration misalignment

Configuration alignment errors occur when a program that is external to the 5620 SAM modifies an eNodeB parameter. An externally initiated device modification causes the value of the change counter to become greater than the value in the 5620 SAM database. The 5620 SAM raises a major configuration misalignment alarm and prevents any further configuration attempts on the faulted device until the alarm condition is resolved by an operator.

Perform one of the following actions to resolve a node configuration misalignment alarm:

- Reconfigure the device by performing Procedure 14-4. This action replaces the current eNodeB database configuration with the device configuration in the 5620 SAM database.
- Perform a full resynchronization by performing Procedure 14-5. This action replaces the device configuration in the 5620 SAM database with the current configuration in the eNodeB database.

Database fallback

The eNodeB can revert its current database configuration to a previous configuration in the event of a database error or other fault. Device fallback causes the value of the change counter to become lower than the value in the 5620 SAM database. The 5620 SAM raises a major database fallback alarm and prevents any further configuration attempts on the faulted device until the alarm condition is resolved by an operator.

Perform one of the following actions to resolve a node database fallback alarm:

- Reconfigure the device by performing Procedure 14-4. This action replaces the current eNodeB database configuration with the device configuration in the 5620 SAM database.
- Perform a full resynchronization by performing Procedure 14-5. This action replaces the device configuration in the 5620 SAM database with the current configuration in the eNodeB database.

Database corruption

The eNodeB MIM can experience unexpected errors and become corrupted. When an eNodeB resets and cannot recover the NetConf objects of the device database, the change counter on the device has a value of zero. The 5620 SAM raises a critical database corruption alarm. An operator must replace the corrupted MIM with a previously synchronized configuration that exists in the 5620 SAM database.

Perform Procedure 14-4 to reconfigure the ENBEquipment base configuration of an eNodeB.

Configuration and database troubleshooting procedures

Perform the following procedures to troubleshoot eNodeB database errors.

Procedure 14-4 To reconfigure an eNodeB database configuration

Perform this procedure to replace the eNodeB MIM with the most recently synchronized version existing in the 5620 SAM database.

Caution 1 — Reconfiguring the eNodeB database configuration replaces the entire eNodeB NetConf MIM, regardless of the existing configuration on the device.

Caution 2 — Performing this procedure may cause a device reset, which is service-affecting.

1 Perform one of the following:

- **a** Open the Network Element form of the faulted device by using the Equipment window.
  - **i** Choose Equipment from the view selector in the navigation tree. The navigation tree displays the Equipment view.
  - **ii** Right-click on an eNodeB and choose Properties from the contextual menu. The Network Element form opens with the General tab displayed.
  - **iii** Go to step 2.
- **b** Open the Network Element form of the faulted device by using the Alarm window.
  - **i** Locate the appropriate equipment alarm in the alarm window.
  - **ii** Right-click on the alarm and choose Show Affected Object from the contextual menu. The Network Element form opens with the General tab displayed.
  - **iii** Go to step 2.

2 Click on the Reconfigure NE button. A warning form opens.

3 Select the check box to indicate that you acknowledge the implications of the action and click on the Yes button.

4 Wait for the reconfigure action to complete. This may take several minutes.

5 Verify that the affecting alarm is cleared and that the eNodeB returns to a managed state.

Procedure 14-5 To resynchronize an eNodeB database configuration

Perform this procedure to resynchronize the current eNodeB MIM database configuration with the 5620 SAM and accept the device configuration.

Caution — Performing this procedure will replace the device configuration in the 5620 SAM database with the configuration that exists on the device. Verify that the device is functioning properly before performing this procedure.

1 Perform one of the following:

- **a** Open the Network Element form of the faulted device by using the Equipment window.
  - **i** Choose Equipment from the view selector in the navigation tree. The navigation tree displays the Equipment view.
  - **ii** Right-click on an eNodeB and choose Properties from the contextual menu. The Network Element form opens with the General tab displayed.
  - **iii** Go to step 2.
- **b** Open the Network Element form of the faulted device by using the Alarm window.
  - **i** Locate the appropriate equipment alarm in the alarm window.
  - **ii** Right-click on the alarm and choose Show Affected Object from the contextual menu. The Network Element form opens with the General tab displayed.
  - **iii** Go to step 2.

2 Click on the Full Resync button. A warning form opens.

3 Select the check box to indicate that you acknowledge the implications of the action and click on the Yes button.

4 Wait for the resynchronization to complete. This may take several minutes.

5 Verify that the affecting alarm is cleared and that the eNodeB returns to a managed state.

14.4 Call trace

The 5620 SAM supports call trace on eNodeB NEs. Call trace is a function that collects call-level data on an interface. This data can be transferred to an external system for processing and analysis, and the resulting information can help a network operator do things such as the following:

- identify performance issues that may affect end-user QoS or SLAs
- troubleshoot device malfunctions
- monitor resource usage for capacity management
- validate end-to-end network transmission

Note — Call trace requires the following 5620 SAM modules:

- SAM-A
- SAM-E
- SAM-P

The 5620 SAM supports the following call-trace session types:

- cell-based—a trace that the 5620 SAM initiates at operator request or as a scheduled task
- event-based—a trace that begins when a specified threshold value is reached
- signaling-based—a trace that the 9471 MME initiates
- debug—a troubleshooting trace performed by Alcatel-Lucent technical support

Note 1 — An eNodeB rejects a signaling-based call-trace activation request if another type of call-trace session is active.

Note 2 — An eNodeB deactivates a signaling-based call-trace session if it receives a request to activate another type of call-trace session.

Note 3 — You cannot manually activate an event-based session.

The 5620 SAM requires at least one pair of dedicated auxiliary servers to collect and store call-trace data. The auxiliary servers are specified during a 5620 SAM main server installation or upgrade. You can use a 5620 SAM client to statically assign an eNodeB to an auxiliary server pair for call-trace operations; otherwise, the 5620 SAM makes the assignment automatically when it tries to initiate a call-trace session.

An auxiliary server stores call-trace data files for a time specified in the general call-trace configuration. However, the 5620 SAM monitors the call-trace disk usage; it raises an alarm when the disk usage reaches 80%, and automatically removes the oldest call-trace files when the usage reaches 95%.

You can configure and manage general call-trace functions using a 5620 SAM GUI or OSS client. The Manage Call Trace Sessions GUI form allows you to do the following:

- Create, modify, and delete sessions.
- Activate or deactivate sessions.

- List and view the active sessions.
- Create call-trace scheduled tasks.
- Specify the storage criteria for the collected data.

You can use the Subscriber and Equipment Traces object in the components tree of an eNodeB NE Instance properties form to configure and manage call-trace functions for a specific eNodeB.

You can associate eNodeBs with call-trace auxiliary-server pairs from the 5620 SAM System Information form.

Call-trace scheduled tasks

You can schedule call-trace session execution by creating a call-trace scheduled task. A call-trace scheduled task associates an existing call-trace session with two 5620 SAM schedules: one that specifies when the session starts, and one that specifies when the session stops.

The following restrictions apply to a call-trace session that is associated with a scheduled task:

- You cannot manually activate or deactivate the session when the task is running.
- If the session is already running at the scheduled start time, the 5620 SAM cannot execute the task, and raises an alarm against the session.
- The task deactivates the session at the scheduled stop time only if the task initiates the session.

See Scheduling chapter of the *5620 SAM User Guide* for information about 5620 SAM schedules and scheduled tasks.

Alarms

The 5620 SAM raises an alarm when it detects a call-trace condition such as the following:

- excessive auxiliary-server disk-space consumption
- session or scheduled task deployment failure
- session or scheduled task execution failure
- session interruption
- invalid session or auxiliary-server configuration
- data collection, storage, or synchronization failure

Statistics

The 5620 SAM LTE logs call trace collection performance statistics such as the following:

- packets processed
- malformed packets
- dropped packets
- files created

- files closed
- files deleted after retention time elapses

Security

Call trace involves sensitive data. Access to the associated GUI forms and to the actions that you can perform are controlled using 5620 SAM scope of command permissions.

Call-trace session and scheduled task actions, for example, creation, activation, deactivation, and deletion, are recorded in the 5620 SAM User Request Log. Access to the User Request Log entries associated with call-trace functions are also controlled using 5620 SAM scope of command permissions.

The lte.SubscAndEquipmentTraces permission controls access to call-trace sessions and scheduled tasks. Table 14-1 lists the lte.SubscAndEquipmentTraces access types that are required for call-trace actions.

Table 14-1 Call-trace actions and lte.SubscAndEquipmentTraces access

Action	Access required
Create call-trace sessions and scheduled tasks	Create
Activate call-trace sessions and scheduled tasks Deactivate call-trace sessions and scheduled tasks	Update/Execute
Delete call-trace sessions and scheduled tasks	Delete

Data collection and storage

During a call-trace session, an eNodeB sends messages in UPOS format over UDP to the Preferred auxiliary server, which converts the message content to 3GPP XML format and adds it to a call-trace file. After a specified rollover time, or when the session ends, the auxiliary server compresses the file using gzip and saves it on the local file system. The Preferred auxiliary server synchronizes the call-trace data files with the Reserved auxiliary server.

Note — The call-trace storage directories that you configure on the Preferred and Reserved auxiliary servers in a pair must match, or data synchronization between the servers fails.

The call-trace data files are stored in the following directory on an auxiliary server:

base_directory/A_*sender*/*trace_reference*

where

base_directory is the call-trace receiving directory specified during 5620 SAM auxiliary-server installation or upgrade, typically /opt/5620sam/calltrace

sender is the eNodeB identifier

trace_reference is the UPOS trace reference

A call-trace file name has the following format:

`AYYYYMMDD.HHMMoffseteNodeB.sender.reference.session.gz`

where

YYYYMMDD is the collection date of the first record in the file

HHMM is the collection time of the first record in the file

offset is the offset from UTC in the format *signHHMM* for example, +0300

sender is the unique UPOS name of the eNodeB

reference is the UPOS trace reference, a hexadecimal value in which the high-order three bytes are the MCC and MNC, and the low-order three bytes are the trace ID

session is the UPOS trace recording session reference value, in decimal

Note — The name of a call-trace file is prepended with TMP_ when the file is in use for data collection. You cannot open or process a call-trace file that is in use for data collection.

Call-trace management procedures

The following procedures describe how to configure global 5620 SAM and local eNodeB call-trace functions. See the *5620 SAM LTE Parameter Reference* for more information about the parameters in the following procedures.

Procedure 14-6 To configure global 5620 SAM call-trace operation

Perform this procedure to configure the 5620 SAM call-trace operational parameters.

1. Choose Manage→Mobile Access→Call Trace Sessions from the 5620 SAM main menu. The Manage Call Trace Sessions form opens with the General tab displayed.
2. Configure the parameters:
   - Call Trace UDP Port
   - File Retention Time (hrs)
   - File Rollover Time (min)
   - Disk Usage Alarm Threshold
   - Disk Usage Alarm Severity
3. Click on the OK button. A dialog box appears.
4. Click on the Yes button. The Manage Call Trace Sessions form closes.

Procedure 14-7 To configure local eNodeB call-trace operation

Perform this procedure to configure the call-trace operational parameters on an eNodeB.

1 Choose Manage→Mobile Access→eNodeB Logical Objects from the 5620 SAM main menu. The Manage eNodeB Logical Objects form opens with the General tab displayed.

2 Choose eNodeB NE Instance (LTE) from the Select Object Type drop-down list and click on the Search button. A list of eNodeB NE instances is displayed.

3 Select an eNodeB NE instance in the list and click on the Properties button. The eNodeB NE Instance (Edit) form opens with the General tab displayed.

4 Click on the Components tab button.

5 Navigate to a Subscriber and Equipment Traces object. The path is eNodeB NE Instance→Subscriber and Equipment Traces→Subscriber and Equipment Traces ID *n*.

6 Right-click on the Subscriber and Equipment Traces ID *n* object and choose Properties from the contextual menu. The Subsc and Equipment Traces (Edit) form opens with the General tab displayed.

7 Configure the parameters:

Note — The isPCMDEnabled parameter consumes a RAN license token from the LTEisPCMDEnabled feature entitlement when the parameter is enabled. See Chapter 8 for more information about RAN licensing.

- isPCMDEnabled
- isSignBasedCTEnabled

8 Click on the OK button. The Subsc and Equipment Traces (Edit) form closes.

9 Click on the Yes button. The Manage Call Trace Sessions form closes.

Procedure 14-8 To create a call-trace session using the global call-trace management form

Perform this procedure to create a call-trace session for manual or scheduled activation using the Manage Call Trace Sessions form.

1 Choose Manage→Mobile Access→Call Trace Sessions from the 5620 SAM main menu. The Manage Call Trace Sessions form opens with the General tab displayed.

2 Click on the Call Trace Sessions tab button.

3 Click on the Create button. The Call Trace Session (Create) form opens with the General tab displayed.

4 Enter a description for the call trace session in the Description field, if required.

5 Click on the Select button to choose an eNodeB instance for the call-trace session. The Select eNodeB Instance form opens.

6 Select an eNodeB instance in the list and click on the OK button. The Select eNodeB Instance form closes, and the eNodeB instance is displayed on the Call Trace Session (Create) form.

7 Configure the parameters:

- Auto-Assign ID
- traceId
- callTraceSessionName
- isRRCTraced
- isS1MMETraced
- isX2Traced
- trafficThreshold (%)
- rrcReestablishmentThreshold
- iratHOThreshold

8 Click on the List of Traced Cells tab button.

9 Click on the Add button. The Select Cells for Call Trace Session form opens with a list of available cells.

10 Select one or more cells in the list and click on the OK button. The Select Cells for Call Trace Session form closes, and the cells are listed on the Call Trace Session (Create) form.

11 Click on the OK button. A dialog box appears.

12 Click on the Yes button. The Call Trace Session (Create) form closes.

13 Close the Manage Call Trace Sessions form.

Procedure 14-9 To create a call-trace session using an eNodeB instance properties form

Perform this procedure to create a call-trace session for manual or scheduled activation using an eNodeB instance properties form.

1 Choose Manage→Mobile Access→eNodeB Logical Objects from the 5620 SAM main menu. The Manage eNodeB Logical Objects form opens with the General tab displayed.

2 Choose eNodeB NE Instance (LTE) from the Select Object Type drop-down list and click on the Search button. A list of eNodeB NE instances is displayed.

3 Select an eNodeB NE instance in the list and click on the Properties button. The eNodeB NE Instance (Edit) form opens with the General tab displayed.

4 Click on the Components tab button.

5 Navigate to a call-trace object. The path is eNodeB NE Instance→Subscriber and Equipment Traces→Subscriber and Equipment Traces ID *n*→Ctg.

6 Right-click on the Ctg object and choose Create Call Trace Session... from the contextual menu. The Call Trace Session (Create) form opens with the General tab displayed.

7 Configure the parameters:

- Auto-Assign ID
- traceId
- callTraceSessionName
- isRRCTraced
- isS1MMETraced
- isX2Traced
- trafficThreshold (%)
- rrcReestablishmentThreshold
- iratHOThreshold

8 Click on the List of Traced Cells tab button.

9 Click on the Add button. The Select Cells for Call Trace Session form opens with a list of available cells.

10 Select one or more cells in the list and click on the OK button. The Select Cells for Call Trace Session form closes, and the cells are listed on the Call Trace Session (Create) form.

11 Click on the OK button. A dialog box appears.

12 Click on the Yes button. The Call Trace Session (Create) form closes, and a new CTg ID: *n* object is displayed in the eNodeB instance components tree.

13 Click on the OK button. A dialog box appears.

14 Click on the Yes button. The eNodeB NE Instance (Edit) form closes.

15 Close the Manage eNodeB Logical Objects form.

Procedure 14-10 To activate a call-trace session

Perform this procedure to manually activate an existing call-trace session.

Note — You cannot activate a call-trace session when the session is currently running as part of a scheduled task.

1. Choose Manage→Mobile Access→Call Trace Sessions from the 5620 SAM main menu. The Manage Call Trace Sessions form opens with the General tab displayed.
2. Click on the Call Trace Sessions tab button. The tab lists the available call-trace sessions.
3. Select a call-trace session in the list and click on the Activate button. The call trace session is activated.
4. Close the Manage Call Trace Sessions form.

Procedure 14-11 To deactivate a call-trace session

Perform this procedure to manually deactivate an active call-trace session.

Note — You cannot deactivate a call-trace session when the session is currently running as part of a scheduled task.

1. Choose Manage→Mobile Access→Call Trace Sessions from the 5620 SAM main menu. The Manage Call Trace Sessions form opens with the General tab displayed.
2. Click on the Call Trace Sessions tab button. The tab lists the available call-trace sessions.
3. Select a call-trace session in the list and click on the Deactivate button. The call trace session is deactivated.
4. Close the Manage Call Trace Sessions form.

Procedure 14-12 To delete a call-trace session

Perform this procedure to delete a call-trace session from the 5620 SAM.

1. Choose Manage→Mobile Access→Call Trace Sessions from the 5620 SAM main menu. The Manage Call Trace Sessions form opens with the General tab displayed.
2. If the call-trace session is associated with a scheduled task, you must delete the scheduled task before you can delete the call-trace session. Perform the following steps.
   - **i** Click on the Scheduled Call Trace Sessions tab button.
   - **ii** Select the scheduled task associated with the call-trace session.
   - **iii** If the scheduled task is running, click on the Task Action button and choose Stop. The scheduled task execution stops.
   - **iv** Click on the Task Action button and choose Shut Down. The Delete button is enabled.
   - **v** Click on the Delete button. A dialog box appears.
   - **vi** Click on the Yes button. The 5620 SAM deletes the scheduled task.
3. Click on the Call Trace Sessions tab button.
4. Select the call-trace session in the list.
5. If the call-trace session is running, click on the Deactivate button. The call-trace session is deactivated.
6. Click on the Properties button. The Call Trace Session (Edit) form opens.
7. Set the Administrative State parameter to Disabled.
8. Click on the OK button. The Call Trace Session (Edit) form closes.
9. Click on the Delete button. A dialog box appears.
10. Click on the Yes button. The 5620 SAM deletes the call-trace session.
11. Select a call-trace session in the list and click on the Delete button. The call trace session is deleted.
12. Close the Manage Call Trace Sessions form.

Procedure 14-13 To create a call-trace scheduled task

Perform this procedure to enable the execution of a call-trace session according to a schedule.

1 Create the following 5620 SAM schedules:

- a start schedule that defines when the call trace is to be activated
- a stop schedule that defines when the call trace is to be deactivated

See Scheduling chapter of the *5620 SAM User Guide* for information about creating schedules.

2 Choose Manage→Mobile Access→Call Trace Sessions from the 5620 SAM main menu. The Manage Call Trace Sessions form opens with the General tab displayed.

3 Click on the Scheduled Call Trace Sessions tab button.

4 Click on the Create button. The Call Trace Scheduled Task form opens with the General tab displayed.

5 Configure the parameters:

- Scheduled Task Name
- Scheduled Task Description
- Administrative State

6 Perform the following steps to choose a start schedule.

i Click on the Select button in the Start Schedule panel. The Select Start Schedule - Call Trace Scheduled Task form opens.

ii Select a schedule in the list and click on the OK button. the Select Start Schedule - Call Trace Scheduled Task form closes, and the schedule identifiers are displayed on the Call Trace Scheduled Task form.

7 Perform the following steps to choose a stop schedule.

i Click on the Select button in the Stop Schedule panel. The Select Stop Schedule - Call Trace Scheduled Task form opens.

ii Select a schedule in the list and click on the OK button. the Select Stop Schedule - Call Trace Scheduled Task form closes, and the schedule identifiers are displayed on the Call Trace Scheduled Task form.

8 Click on the Call Trace Sessions tab button.

9 Click on the Add button. The Select Call Trace Sessions for Call Trace Scheduled Task form opens with a list of available call-trace sessions listed.

10 Select a call-trace session and click on the OK button. The Select Call Trace Sessions for Call Trace Scheduled Task form closes, and the call-trace session is listed on the Call Trace Scheduled Task form.

11 Click on the OK button. A dialog box appears.

12 Click on the Yes button. The Call Trace Scheduled Task (Create) form closes, and the call-trace scheduled task is listed on the Manage Call Trace Sessions form.

13 Close the Manage Call Trace Sessions form.

Procedure 14-14 To control call-trace scheduled task execution

Perform this procedure to start, stop, enable or disable a call-trace scheduled task.

1 Choose Manage→Mobile Access→Call Trace Sessions from the 5620 SAM main menu. The Manage Call Trace Sessions form opens with the General tab displayed.

2 Click on the Scheduled Call Trace Sessions tab button.

3 Select a scheduled task in the list.

4 Click on the Task Action button and perform one of the following using a contextual menu option.

   a To immediately execute the scheduled task, choose Start Session.

   b To immediately stop scheduled task execution, choose Stop.

   c To administratively enable the scheduled task, choose Turn Up.

   d To administratively disable the scheduled task, choose Shut Down.

5 Close the Manage Call Trace Sessions form.

Procedure 14-15 To manage the assignment of eNodeBs to call-trace auxiliary-server pairs

Perform this procedure to specify which eNodeBs are assigned to which call-trace auxiliary-server pairs.

1 Choose Administration->System Information from the 5620 SAM main menu. The System Information form opens with the General tab displayed.

2 Click on the Auxiliary Service Server Pair Group tab button.

3 Select an auxiliary-server pair group in the list and click on the Properties button. The Auxiliary Service Server Pair Group form opens with the General tab displayed.

4 Click on the Auxiliary Server Pair tab button.

5 Select an auxiliary-server pair in the list and click on the Properties button. The Auxiliary Server Pair form opens with the General tab displayed.

6 Click on the Assigned Objects tab button. The Assigned Objects tab lists the eNodeBs that are assigned to the auxiliary-server pair.

7 To assign an eNodeB to the auxiliary-server pair, perform the following steps.

i Click on the Add button. The Select Network Elements form opens.

ii Select an eNodeB in the list and click on the OK button. The Select Network Elements form closes, and the eNodeB is listed on the Auxiliary Server Pair form.

8 To remove an assigned eNodeB from the auxiliary-server pair, click on the Delete button. The eNodeB is removed from the list.

9 Click on the OK button. The Auxiliary Server Pair form closes.

10 Click on the OK button. A dialog box appears.

11 Click on the Yes button. The Auxiliary Server Pair form closes.

12 Close the System Information form.

After you assign an eNodeB to a different auxiliary-server pair, the 5620 SAM updates the auxiliary-server IP address on the Subsc And Equipment Traces form of the eNodeB.

After you remove an assigned eNodeB from an auxiliary-server pair, the 5620 SAM replaces the auxiliary-server IP address on the Subsc And Equipment Traces form of the eNodeB with a series of zeroes.

13 Close the Manage Call Trace Sessions form.

Appendices

A. eNodeB PM statistics counters ***A-1***

A. eNodeB PM statistics counters

A.1 eNodeB PM statistics counters *A-2*

A.2 eNodeB interface statistics *A-83*

A.1 eNodeB PM statistics counters

This appendix lists in tabular form the PM statistics counters that the 5620 SAM supports for the eNodeB. Each counter table corresponds to a 5620 SAM Statistics Record form, and contains the counters that are displayed on the form. Each counter entry in a table contains the following:

- the 5620 SAM GUI counter name
- the eNodeB 3GPP counter name as listed in the *Alcatel-Lucent 9412 eNodeB | Release LAx.x Counters Reference Guide 418-000-035*

Some counters have subcounters, which are indicated using a period and 3GPP suffix that are appended to the parent counter eNodeB 3GPP name. For example, VS.IfInLinkUtilisation.Max is a subcounter of the VS.IfInLinkUtilisation counter.

See the *Alcatel-Lucent 9412 eNodeB | Release LAx.x Counters Reference Guide 418-000-035* for descriptive information about a specific counter.

Note — A statistics counter in the 5620 SAM GUI whose displayed name ends with “Periodic” is a counter that records the difference between the current and previous values of an associated 5620 SAM counter. The tables in this appendix do not list Periodic counters.

Table A-1 lists each statistics class and the associated statistics-counter table.

Table A-1 Statistics classes and counter tables

Class name	See
MTS	A-2
Active users Stats	A-3
Additional E-RAB Setup Stats	A-4
Cell Change Order To GERAN	A-5
Cell Throughput On L1 Channels Stats	A-6
Common Mobility Management Framework Stats	A-7
Control format indicator usage	A-8
CS Fallback Cell Change Order To GERAN	A-9
CS Fallback PS Handover To UTRAN FDD	A-10
DL PRB Usage Stats	A-11
Downlink Cell PDCP SDU Volume Stats	A-12
Downlink Grants per TTI Stats	A-13
Downlink L2 Traffic and Throughput Stats	A-14
Downlink MIMO eligibility decisions Stats	A-15
Dynamic Scheduling Stats	A-16
E-RAB Abnormal Release Stats	A-17
E-RAB Modify Failure Stats	A-18

(1 of 7)

Class name	See
E-RAB Modify Request Stats	A-19
E-RAB Modify Success Stats	A-20
E-RAB Normal Release Stats	A-21
E-RAB Release Command E-RAB Requested To Be Released Stats	A-22
E-RAB Release Indication E-RAB Released Stats	A-23
E-RAB Release Response E-RAB Release Stats	A-24
E-RAB Setup Procedure Stats	A-25
ENB Sync And Announce Message Stats	A-26
Enhanced Non-Optimized Redirections To HRPD Via Event B2 Stats	A-27
Gap-Assisted Handover Stats	A-28
GBR E-RAB Stats	A-29
GEthernet interface Stats	A-30
HO Cell Selection Stats	A-31
HO Inter-Cell Intra-eNodeB Stats	A-32
HO Intra-Cell Stats	A-33
Incoming E-RAB Setup Stats	A-34
Incoming E-RAB Setup Stats	A-35
Incoming E-RAB To Be Setup On IRATHO Stats	A-36
Incoming HO Inter-Cell Inter-eNodeB via S1 Stats	A-37
Incoming HO Inter-Cell Inter-eNodeB via X2 Stats	A-38
Incoming HO Inter-Cell Intra-eNodeB Stats	A-39
Incoming PS Handover From UTRA Stats	A-40
Initial E-RAB Setup Stats	A-41
L1 Connection Stats	A-42
L1 Traffic and throughput MAC-BLER	A-43
L2 Traffic - SYNC PDU Stats	A-44
L2 Traffic - SYNC sequence Stats	A-45
Layer 0 wideband CQI reported in MIMO Stats	A-46
Layer 1 wideband CQI reported in MIMO Stats	A-47
Local UE Context Release Stats	A-48
M1 Traffic Stats	A-49
Non-GBR E-RAB RLC Downlink Throughput Stats	A-50
Non-GBR E-RAB RLC Uplink Throughput Stats	A-51
Number Of Bearers Per Cell	A-52
Number Of Bearers Per eNodeB	A-53
OAM VLAN Stats	A-54
Outgoing HO Inter-Cell Inter-eNodeB via S1 Stats	A-55

(2 of 7)

Class name	See
Outgoing HO Inter-Cell Inter-eNodeB via X2 Stats	A-56
Outgoing HO Inter-Cell Intra-eNodeB Stats	A-57
Outgoing PS Handover To UTRAN FDD Failure And Abort Stats	A-58
Outgoing PS Handover To UTRAN FDD	A-59
Outgoing PS Handover To UTRAN TDD	A-60
Outgoing PS Handover To UTRAN TDD	A-61
Paging Attempt Stats	A-62
Power Headroom Stats	A-63
PRBs Pool Overload Stats	A-64
PS Handover to UTRAN FDD Stats	A-65
PS Handover to UTRAN TDD Stats	A-66
RACH	A-67
Radio Link Stats	A-68
Redirection to GERAN Stats	A-69
Redirection To HRPD Stats	A-70
Redirection To Inter-Frequency Intra-FDD or TDD Stats	A-71
Redirection To Inter-Frequency Same Frame Structure Stats	A-72
Redirection to UTRAN FDD Stats	A-73
Redirection to UTRAN TDD Stats	A-74
RRC Connection Release Rue To MME Overload	A-75
RRC Connection Setup Stats	A-76
RRC Connection Stats	A-77
RRC Reestablishment Setup Stats	A-78
S1 Error Indication By eNodeB Stats	A-79
S1 Error Indication By MME Stats	A-80
S1 SCTP Traffic Stats	A-81
S1 Setup Stats	A-82
SCTP Association Stats	A-83
Throughput On S1 interfaces Stats	A-84
Throughput On X2 interfaces Stats	A-85
Traffic On S1 interfaces Stats	A-86
Traffic On X2 interfaces Stats	A-87
Transport Block Stats	A-88
UE Context Modification Stats	A-89
UE Context Release Command Stats	A-90
UE Context Release Request Stats	A-91
UE Context Setup Stats	A-92

(3 of 7)

Class name	See
UE scheduled per TTI Stats	A-93
UL PRB Usage Stats	A-94
Uplink Cell PDCP SDU Volume Stats	A-95
Uplink Grants per TTI Stats	A-96
Uplink L2 Traffic and Throughput Stats	A-97
Uplink Noise For PRB100	A-98
Uplink Noise For PRB10	A-99
Uplink Noise For PRB10	A-100
Uplink Noise For PRB11	A-101
Uplink Noise For PRB11	A-102
Uplink Noise For PRB12	A-103
Uplink Noise For PRB12	A-104
Uplink Noise For PRB13	A-105
Uplink Noise For PRB13	A-106
Uplink Noise For PRB14	A-107
Uplink Noise For PRB14	A-108
Uplink Noise For PRB15	A-109
Uplink Noise For PRB15	A-110
Uplink Noise For PRB16	A-111
Uplink Noise For PRB16	A-112
Uplink Noise For PRB17	A-113
Uplink Noise For PRB17	A-114
Uplink Noise For PRB18	A-115
Uplink Noise For PRB19	A-116
Uplink Noise For PRB19	A-117
Uplink Noise For PRB1	A-118
Uplink Noise For PRB1	A-119
Uplink Noise For PRB20	A-120
Uplink Noise For PRB20	A-121
Uplink Noise For PRB21	A-122
Uplink Noise For PRB21	A-123
Uplink Noise For PRB22	A-124
Uplink Noise For PRB22	A-125
Uplink Noise For PRB23	A-126
Uplink Noise For PRB23	A-127
Uplink Noise For PRB24	A-128
Uplink Noise For PRB24	A-129

(4 of 7)

Class name	See
Uplink Noise For PRB25	A-130
Uplink Noise For PRB25	A-131
Uplink Noise For PRB26	A-132
Uplink Noise For PRB27	A-133
Uplink Noise For PRB28	A-134
Uplink Noise For PRB29	A-135
Uplink Noise For PRB2	A-136
Uplink Noise For PRB2	A-137
Uplink Noise For PRB30	A-138
Uplink Noise For PRB31	A-139
Uplink Noise For PRB32	A-140
Uplink Noise For PRB33	A-141
Uplink Noise For PRB34	A-142
Uplink Noise For PRB35	A-143
Uplink Noise For PRB36	A-144
Uplink Noise For PRB37	A-145
Uplink Noise For PRB38	A-146
Uplink Noise For PRB39	A-147
Uplink Noise For PRB3	A-148
Uplink Noise For PRB3	A-149
Uplink Noise For PRB40	A-150
Uplink Noise For PRB41	A-151
Uplink Noise For PRB42	A-152
Uplink Noise For PRB43	A-153
Uplink Noise For PRB44	A-154
Uplink Noise For PRB45	A-155
Uplink Noise For PRB46	A-156
Uplink Noise For PRB47	A-157
Uplink Noise For PRB48	A-158
Uplink Noise For PRB49	A-159
Uplink Noise For PRB4	A-160
Uplink Noise For PRB4	A-161
Uplink Noise For PRB50	A-162
Uplink Noise For PRB51	A-163
Uplink Noise For PRB52	A-164
Uplink Noise For PRB53	A-165
Uplink Noise For PRB54	A-166

(5 of 7)

Class name	See
Uplink Noise For PRB55	A-167
Uplink Noise For PRB56	A-168
Uplink Noise For PRB57	A-169
Uplink Noise For PRB58	A-170
Uplink Noise For PRB59	A-171
Uplink Noise For PRB5	A-172
Uplink Noise For PRB5	A-173
Uplink Noise For PRB60	A-174
Uplink Noise For PRB61	A-175
Uplink Noise For PRB62	A-176
Uplink Noise For PRB63	A-177
Uplink Noise For PRB64	A-178
Uplink Noise For PRB65	A-179
Uplink Noise For PRB66	A-180
Uplink Noise For PRB67	A-181
Uplink Noise For PRB68	A-182
Uplink Noise For PRB69	A-183
Uplink Noise For PRB6	A-184
Uplink Noise For PRB6	A-185
Uplink Noise For PRB70	A-186
Uplink Noise For PRB71	A-187
Uplink Noise For PRB72	A-188
Uplink Noise For PRB73	A-189
Uplink Noise For PRB74	A-190
Uplink Noise For PRB75	A-191
Uplink Noise For PRB76	A-192
Uplink Noise For PRB77	A-193
Uplink Noise For PRB78	A-194
Uplink Noise For PRB79	A-195
Uplink Noise For PRB7	A-196
Uplink Noise For PRB7	A-197
Uplink Noise For PRB80	A-198
Uplink Noise For PRB81	A-199
Uplink Noise For PRB82	A-200
Uplink Noise For PRB83	A-201
Uplink Noise For PRB84	A-202
Uplink Noise For PRB85	A-203

(6 of 7)

Class name	See
Uplink Noise For PRB86	A-204
Uplink Noise For PRB87	A-205
Uplink Noise For PRB88	A-206
Uplink Noise For PRB89	A-207
Uplink Noise For PRB8	A-208
Uplink Noise For PRB8	A-209
Uplink Noise For PRB90	A-210
Uplink Noise For PRB91	A-211
Uplink Noise For PRB92	A-212
Uplink Noise For PRB93	A-213
Uplink Noise For PRB94	A-214
Uplink Noise For PRB95	A-215
Uplink Noise For PRB96	A-216
Uplink Noise For PRB97	A-217
Uplink Noise For PRB98	A-218
Uplink Noise For PRB99	A-219
Uplink Noise For PRB9	A-220
Uplink Noise For PRB9	A-221
Uplink Paired Grants per TTI Stats	A-222
VoIP downlink FER Stats	A-223
VoIP downlink FER Stats	A-224
Wideband CQI Reported in Tx Diversity Stats	A-225
X2 SCTP Traffic Stats	A-226

(7 of 7)

Table A-2 MTS counters

5620 SAM GUI name	eNodeB 3GPP name
mts	VS.mts

Table A-3 Active users Stats counters

5620 SAM GUI name	eNodeB 3GPP name
Number Of Active UE In DL Per QCI -	VS.NbActiveUEInDLPerQCI
Number Of Active UE In DL Per QCI - GBR	VS.NbActiveUEInDLPerQCI.GBR
Number Of Active UE In DL Per QCI - Non-GBR	VS.NbActiveUEInDLPerQCI.NonGBR

(1 of 2)

5620 SAM GUI name	eNodeB 3GPP name
Number Of Active UE In DL Per QCI - VoIP	VS.NbActiveUEInDLPerQCI.VoIP
Number Of Active UE In UL Per QCI	VS.NbActiveUEInULPerQCI
Number Of Active UE In UL Per QCI - GBR	VS.NbActiveUEInULPerQCI.GBR
Number Of Active UE In UL Per QCI - Non-GBR	VS.NbActiveUEInULPerQCI.NonGBR
Number Of Active UE In UL Per QCI - VoIP	VS.NbActiveUEInULPerQCI.VoIP

(2 of 2)

Table A-4 Additional E-RAB Setup Stats counters

5620 SAM GUI name	eNodeB 3GPP name
Additional ERAB Setup Request Customer QC Is	VS.AdditionalERABSetupRequest.CustomerQCIs
Additional ERAB Setup Request QC I 1	VS.AdditionalERABSetupRequest.QCI1
Additional ERAB Setup Request QC I 2	VS.AdditionalERABSetupRequest.QCI2
Additional ERAB Setup Request QC I 3	VS.AdditionalERABSetupRequest.QCI3
Additional ERAB Setup Request QC I 4	VS.AdditionalERABSetupRequest.QCI4
Additional ERAB Setup Request QC I 5	VS.AdditionalERABSetupRequest.QCI5
Additional ERAB Setup Request QC I 6	VS.AdditionalERABSetupRequest.QCI6
Additional ERAB Setup Request QC I 7	VS.AdditionalERABSetupRequest.QCI7
Additional ERAB Setup Request QC I 8	VS.AdditionalERABSetupRequest.QCI8
Additional ERAB Setup Request QC I 9	VS.AdditionalERABSetupRequest.QCI9
Additional ERAB Setup Success Customer QC Is	VS.AdditionalERABSetupSuccess.CustomerQCIs
Additional ERAB Setup Success QC I 1	VS.AdditionalERABSetupSuccess.QCI1
Additional ERAB Setup Success QC I 2	VS.AdditionalERABSetupSuccess.QCI2
Additional ERAB Setup Success QC I 3	VS.AdditionalERABSetupSuccess.QCI3
Additional ERAB Setup Success QC I 4	VS.AdditionalERABSetupSuccess.QCI4
Additional ERAB Setup Success QC I 5	VS.AdditionalERABSetupSuccess.QCI5
Additional ERAB Setup Success QC I 6	VS.AdditionalERABSetupSuccess.QCI6
Additional ERAB Setup Success QC I 7	VS.AdditionalERABSetupSuccess.QCI7
Additional ERAB Setup Success QC I 8	VS.AdditionalERABSetupSuccess.QCI8
Additional ERAB Setup Success QC I 9	VS.AdditionalERABSetupSuccess.QCI9

Table A-5 Cell Change Order To GERAN counters

5620 SAM GUI name	eNodeB 3GPP name
CCO To GERAN Attempts	VS.CCOToGeranAttempt
Event B2 And Threshold1 RSRP Threshold2 GERAN With NACC Attempts	VS.CCOToGeranAttempt.EventB2AndThreshold1RSRPThreshold2GERANWithNACC

(1 of 2)

5620 SAM GUI name	eNodeB 3GPP name
Event B2 And Threshold1 RSRP Threshold2 GERAN Without NACC Attempts	VS.CCOToGeranAttempt.EventB2AndThreshold1RSRPThreshold2GERANWithoutNACC
Event B2 And Threshold1 RSRQ Threshold2 GERAN With NACC Attempts	VS.CCOToGeranAttempt.EventB2AndThreshold1RSRQThreshold2GERANWithNACC
Event B2 And Threshold1 RSRQ Threshold2 GERAN Without NACC Attempts	VS.CCOToGeranAttempt.EventB2AndThreshold1RSRQThreshold2GERANWithoutNACC
CCO To GERAN Failure	VS.CCOToGeranFailure
CCO To GERAN Failure Sum	VS.CCOToGeranFailureSum
CCO To GERAN Failure Sum With NACC	VS.CCOToGeranFailureSum.withNACC
CCO To GERAN Failure Sum Without NACC	VS.CCOToGeranFailureSum.withoutNACC
RRC Connection Reestablishment In CCO With NACC	VS.CCOToGeranFailure.RRCConnectionReestablishmentInCCOwithNACC
RRC Connection Reestablishment In CCO Without NACC	VS.CCOToGeranFailure.RRCConnectionReestablishmentInCCOwithoutNACC
CCO To GERAN Success	VS.CCOToGeranSuccess
Event B2 And Threshold1RSRP Threshold2 GERAN With NACC Success	VS.CCOToGeranSuccess.EventB2AndThreshold1RSRPThreshold2GERANWithNACC
Event B2 And Threshold1 RSRP Threshold2 GERAN Without NACC Success	VS.CCOToGeranSuccess.EventB2AndThreshold1RSRPThreshold2GERANWithoutNACC
Event B2 And Threshold1 RSRQ Threshold2 GERAN With NACC Success	VS.CCOToGeranSuccess.EventB2AndThreshold1RSRQThreshold2GERANWithNACC
Event B2 And Threshold1 RSRQ Threshold2 GERAN Without NACC Success	VS.CCOToGeranSuccess.EventB2AndThreshold1RSRQThreshold2GERANWithoutNACC

(2 of 2)

Table A-6 Cell Throughput On L1 Channels Stats counters

5620 SAM GUI name	eNodeB 3GPP name
Cell DL L 1 Throughput GT Range 1 Le Range 2	VS.CellDLL1Throughput.GTRange1LeRange2
Cell DL L 1 Throughput GT Range 2 Le Range 3	VS.CellDLL1Throughput.GTRange2LeRange3
Cell DL L 1 Throughput GT Range 3 Le Range 4	VS.CellDLL1Throughput.GTRange3LeRange4
Cell DL L 1 Throughput GT Range 4	VS.CellDLL1Throughput.GTRange4
Cell DL L 1 Throughput Le Range 1	VS.CellDLL1Throughput.LeRange1
Cell UL L 1 Throughput GT Range 1 Le Range 2	VS.CellULL1Throughput.GTRange1LeRange2
Cell UL L 1 Throughput GT Range 2 Le Range 3	VS.CellULL1Throughput.GTRange2LeRange3
Cell UL L 1 Throughput GT Range 3 Le Range 4	VS.CellULL1Throughput.GTRange3LeRange4
Cell UL L 1 Throughput GT Range 4	VS.CellULL1Throughput.GTRange4
Cell UL L 1 Throughput Le Range 1	VS.CellULL1Throughput.LeRange1

Table A-7 Common Mobility Management Framework Stats counters

5620 SAM GUI name	eNodeB 3GPP name
Evolved Multi Carrier Traffic Allocation Trigger	VS.EvolvedMultiCarrierTrafficAllocationTrigger
Evolved Multi Carrier Traffic Allocation Trigger Event A 2CA For Good To Alarm Transition For Radio Coverage	VS.EvolvedMultiCarrierTrafficAllocationTrigger.EventA2CAFor GoodToAlarmTransitionForRadioCoverage

Table A-8 Control format indicator usage counters

5620 SAM GUI name	eNodeB 3GPP name
CFI Usage	VS.CFIUsage
CFI1 Usage	VS.CFIUsage.CFI1
CFI2 Usage	VS.CFIUsage.CFI2
CFI3 Usage	VS.CFIUsage.CFI3

Table A-9 CS Fallback Cell Change Order To GERAN counters

5620 SAM GUI name	eNodeB 3GPP name
CS Fallback CCO To GERAN Attempt	VS.CsFallbackCCOToGeranAttempt
With NACC	VS.CsFallbackCCOToGeranAttempt.WithNACC
Without NACC	VS.CsFallbackCCOToGeranAttempt.WithoutNACC
CS Fallback CCO To GERAN Failure Sum	VS.CsFallbackCCOToGeranFailureSum
CS Fallback CCO To GERAN Failure Sum With NAAC	VS.CsFallbackCCOToGeranFailureSum.WithNACC
CS Fallback CCO To GERAN Failure Sum Without NAAC	VS.CsFallbackCCOToGeranFailureSum.WithoutNACC
CS Fallback CCO To GERAN Success	VS.CsFallbackCCOToGeranSuccess
CS Fallback CCO To GERAN Success With NACC	VS.CsFallbackCCOToGeranSuccess.WithNACC
CS Fallback CCO To GERAN Success Without NACC	VS.CsFallbackCCOToGeranSuccess.WithoutNACC

Table A-10 CS Fallback PS Handover To UTRAN FDD counters

5620 SAM GUI name	eNodeB 3GPP name
Outgoing CS Fallback PS HO To UTRAN FDD Abort Sum	VS.OutgoingCsFallbackPSHOToUtraFddAbortSum
Outgoing CS Fallback PS HO To UTRAN FDD Attempt	VS.OutgoingCsFallbackPSHOToUtraFddAttempt
Outgoing CS Fallback PS HO To UTRAN FDD Sum	VS.OutgoingCsFallbackPSHOToUtraFddFailureSum
Outgoing CS Fallback PS HO To UTRAN FDD Success	VS.OutgoingCsFallbackPSHOToUtraFddSuccess

Table A-11 DL PRB Usage Stats counters

5620 SAM GUI name	eNodeB 3GPP name
Usage Per Traffic Class	VS.DLPRBUsagePerTrafficClass
Usage Per Traffic Class - GBR	VS.DLPRBUsagePerTrafficClass.GBR
Usage Per Traffic Class - NonGBR	VS.DLPRBUsagePerTrafficClass.NonGBR
Usage Per Traffic Class - VoIP	VS.DLPRBUsagePerTrafficClass.VoIP
DL Total PRB Usage	VS.DLTotalPRBUsage

Table A-12 Downlink Cell PDCP SDU Volume Stats counters

5620 SAM GUI name	eNodeB 3GPP name
DRB Pdcp Sdu Bit Rate DL	VS.DRBPdcpSduBitRateDL
DRB Pdcp Sdu Kbytes DL	VS.DRBPdcpSduKbytesDL
DRB Pdcp Sdu Kbytes DL Non GBR	VS.DRBPdcpSduKbytesDL.NonGBR
DRB Pdcp Sdu Kbytes DL Other GBR	VS.DRBPdcpSduKbytesDL.OtherGBR
DRB Pdcp Sdu Kbytes DL Vo IP	VS.DRBPdcpSduKbytesDL.VoIP

Table A-13 Downlink Grants per TTI Stats counters

5620 SAM GUI name	eNodeB 3GPP name
DL Grant 0 Grant	VS.DLGrant.0Grant
DL Grant 1 Grant	VS.DLGrant.1Grant
DL Grant 2 Grants	VS.DLGrant.2Grants
DL Grant 3 Grants	VS.DLGrant.3Grants
DL Grant 4 Grants	VS.DLGrant.4Grants
DL Grant 5 Grants	VS.DLGrant.5Grants
DL Grant 6or More Grants	VS.DLGrant.6orMoreGrants

Table A-14 Downlink L2 Traffic and Throughput Stats counters

5620 SAM GUI name	eNodeB 3GPP name
DL Rlc Pdu Kbytes GBR	VS.DLRlcPduKbytes.GBR
DL Rlc Pdu Kbytes Non GBR	VS.DLRlcPduKbytes.NonGBR
DL Rlc Pdu Kbytes Vo IP	VS.DLRlcPduKbytes.VoIP
DL Rlc Pdu Retransmitted GBR	VS.DLRlcPduRetransmitted.GBR

(1 of 2)

5620 SAM GUI name	eNodeB 3GPP name
DL Rlc Pdu Retransmitted Non GBR	VS.DLRlcPduRetransmitted.NonGBR
DL Rlc Pdu Sent GBR	VS.DLRlcPduSent.GBR
DL Rlc Pdu Sent Non GBR	VS.DLRlcPduSent.NonGBR
DL Rlc Pdu Sent Vo IP	VS.DLRlcPduSent.VoIP

(2 of 2)

Table A-15 Downlink MIMO eligibility decisions Stats counters

5620 SAM GUI name	eNodeB 3GPP name
DL MiMO Eligibility Decision	VS.DLMimoEligibilityDecision
DL Mimo Eligibility Decision Eligible	VS.DLMimoEligibilityDecision.Eligible
DL Mimo Eligibility Decision Not Eligible	VS.DLMimoEligibilityDecision.NotEligible

Table A-16 Dynamic Scheduling Stats counters

5620 SAM GUI name	eNodeB 3GPP name
DL Data Volume With Dynamic Scheduling Per FD Users	VS.DLDataVolumeWithDynamicSchedulingPerUserCategory.FD Users
DL Data Volume With Dynamic Scheduling Per FS Users	VS.DLDataVolumeWithDynamicSchedulingPerUserCategory.FS Users
DL PRB Used With Dynamic Scheduling Per FD Users	VS.DLPRBUsedWithDynamicSchedulingPerUserCategory.FDUse rs
DL PRB Used With Dynamic Scheduling Per FS Users	VS.DLPRBUsedWithDynamicSchedulingPerUserCategory.FSUse rs
PUCCH Message Per PCQI PMI Ri Config	VS.PUCCHMessagesPerType.PcqiPmiRiConf
PUCCH Message Per SRConf	VS.PUCCHMessagesPerType.SRConf
PUCCH Message Per SRRec	VS.PUCCHMessagesPerType.SRRec
UL Data Volume With Dynamic Scheduling Per FD Users	VS.ULDataVolumeWithDynamicSchedulingPerUserCategory.FD Users
UL Data Volume With Dynamic Scheduling Per FS Users	VS.ULDataVolumeWithDynamicSchedulingPerUserCategory.FS Users
UL PRB Used With Dynamic Scheduling Per FD Users	VS.ULPRBUsedWithDynamicSchedulingPerUserCategory.FDUse rs
UL PRB Used With Dynamic Scheduling Per FS Users	VS.ULPRBUsedWithDynamicSchedulingPerUserCategory.FSUse rs

Table A-17 E-RAB Abnormal Release Stats counters

5620 SAM GUI name	eNodeB 3GPP name
Customer QCI Abnormal E-RAB Release	VS.AbnormalERABReleasePerQCI.CustomerQCIs
QCI1 Abnormal E-RAB Release	VS.AbnormalERABReleasePerQCI.QCI1
QCI2 Abnormal E-RAB Release	VS.AbnormalERABReleasePerQCI.QCI2
QCI3 Abnormal E-RAB Release	VS.AbnormalERABReleasePerQCI.QCI3
QCI4 Abnormal E-RAB Release	VS.AbnormalERABReleasePerQCI.QCI4
QCI5 Abnormal E-RAB Release	VS.AbnormalERABReleasePerQCI.QCI5
QCI6 Abnormal E-RAB Release	VS.AbnormalERABReleasePerQCI.QCI6
QCI7 Abnormal E-RAB Release	VS.AbnormalERABReleasePerQCI.QCI7
QCI8 Abnormal E-RAB Release	VS.AbnormalERABReleasePerQCI.QCI8
QCI9 Abnormal E-RAB Release	VS.AbnormalERABReleasePerQCI.QCI9

Table A-18 E-RAB Modify Failure Stats counters

5620 SAM GUI name	eNodeB 3GPP name
ERAB Modify Failed	VS.ERABModifyFailed
ERAB Modify Failed CAC Failure	VS.ERABModifyFailed.CACFailure
ERAB Modify Failed Interaction With Other Procedure	VS.ERABModifyFailed.InteractionWithOtherProcedure
ERAB Modify Failed Internal Ffailure	VS.ERABModifyFailed.InternalFfailure
ERAB Modify Failed Invalid IE Combination	VS.ERABModifyFailed.InvalidIECombination
ERAB Modify Failed OAM Intervention	VS.ERABModifyFailed.OAMIntervention
ERAB Modify Failed RRC Connection Reestablishment	VS.ERABModifyFailed.RRCConnectionReestablishment
ERAB Modify Failed Timeout	VS.ERABModifyFailed.Timeout

Table A-19 E-RAB Modify Request Stats counters

5620 SAM GUI name	eNodeB 3GPP name
ERAB Modify Request	VS.ERABModifyRequest
ERAB Modify Request Customer QC Is	VS.ERABModifyRequest.CustomerQCIs
ERAB Modify Request QC I 1	VS.ERABModifyRequest.QCI1
ERAB Modify Request QC I 2	VS.ERABModifyRequest.QCI2
ERAB Modify Request QC I 3	VS.ERABModifyRequest.QCI3
ERAB Modify Request QC I 4	VS.ERABModifyRequest.QCI4
ERAB Modify Request QC I 5	VS.ERABModifyRequest.QCI5
ERAB Modify Request QC I 6	VS.ERABModifyRequest.QCI6

(1 of 2)

5620 SAM GUI name	eNodeB 3GPP name
ERAB Modify Request QC I 7	VS.ERABModifyRequest.QCI7
ERAB Modify Request QC I 8	VS.ERABModifyRequest.QCI8
ERAB Modify Request QC I 9	VS.ERABModifyRequest.QCI9

(2 of 2)

Table A-20 E-RAB Modify Success Stats counters

5620 SAM GUI name	eNodeB 3GPP name
ERAB Modify Success	VS.ERABModifySuccess
ERAB Modify Success Customer QC Is	VS.ERABModifySuccess.CustomerQCIs
ERAB Modify Success QC I 1	VS.ERABModifySuccess.QCI1
ERAB Modify Success QC I 2	VS.ERABModifySuccess.QCI2
ERAB Modify Success QC I 3	VS.ERABModifySuccess.QCI3
ERAB Modify Success QC I 4	VS.ERABModifySuccess.QCI4
ERAB Modify Success QC I 5	VS.ERABModifySuccess.QCI5
ERAB Modify Success QC I 6	VS.ERABModifySuccess.QCI6
ERAB Modify Success QC I 7	VS.ERABModifySuccess.QCI7
ERAB Modify Success QC I 8	VS.ERABModifySuccess.QCI8
ERAB Modify Success QC I 9	VS.ERABModifySuccess.QCI9

Table A-21 E-RAB Normal Release Stats counters

5620 SAM GUI name	eNodeB 3GPP name
Customer QCI Normal E-RAB Release	VS.NormalERABRelease.CustomerQCIs
QCI1 Normal E-RAB Release	VS.NormalERABRelease.QCI1
QCI2 Normal E-RAB Release	VS.NormalERABRelease.QCI2
QCI3 Normal E-RAB Release	VS.NormalERABRelease.QCI3
QCI4 Normal E-RAB Release	VS.NormalERABRelease.QCI4
QCI5 Normal E-RAB Release	VS.NormalERABRelease.QCI5
QCI6 Normal E-RAB Release	VS.NormalERABRelease.QCI6
QCI7 Normal E-RAB Release	VS.NormalERABRelease.QCI7
QCI8 Normal E-RAB Release	VS.NormalERABRelease.QCI8
QCI9 Normal E-RAB Release	VS.NormalERABRelease.QCI9

Table A-22 E-RAB Release Command E-RAB Requested To Be Released Stats counters

5620 SAM GUI name	eNodeB 3GPP name
Normal Release	VS.ERABReleaseCommandERABRequestedToBeReleasedPerCause.NormalRelease
Other Cause	VS.ERABReleaseCommandERABRequestedToBeReleasedPerCause.OtherCause
Unspecified	VS.ERABReleaseCommandERABRequestedToBeReleasedPerCause.Unspecified
Customer QCIs	VS.ERABReleaseCommandERABRequestedToBeReleasedPerQCI.CustomerQCIs
QCI1	VS.ERABReleaseCommandERABRequestedToBeReleasedPerQCI.QCI1
QCI2	VS.ERABReleaseCommandERABRequestedToBeReleasedPerQCI.QCI2
QCI3	VS.ERABReleaseCommandERABRequestedToBeReleasedPerQCI.QCI3
QCI4	VS.ERABReleaseCommandERABRequestedToBeReleasedPerQCI.QCI4
QCI5	VS.ERABReleaseCommandERABRequestedToBeReleasedPerQCI.QCI5
QCI6	VS.ERABReleaseCommandERABRequestedToBeReleasedPerQCI.QCI6
QCI7	VS.ERABReleaseCommandERABRequestedToBeReleasedPerQCI.QCI7
QCI8	VS.ERABReleaseCommandERABRequestedToBeReleasedPerQCI.QCI8
QCI9	VS.ERABReleaseCommandERABRequestedToBeReleasedPerQCI.QCI9

Table A-23 E-RAB Release Indication E-RAB Released Stats counters

5620 SAM GUI name	eNodeB 3GPP name
No Radio Resource Available In Target Cell	VS.ERABReleaseIndicationERABReleasedPerCause.NoRadioResourceAvailableInTargetCell
Customer QCIs	VS.ERABReleaseIndicationERABReleasedPerQCI.CustomerQCIs
QCI1	VS.ERABReleaseIndicationERABReleasedPerQCI.QCI1
QCI2	VS.ERABReleaseIndicationERABReleasedPerQCI.QCI2
QCI3	VS.ERABReleaseIndicationERABReleasedPerQCI.QCI3
QCI4	VS.ERABReleaseIndicationERABReleasedPerQCI.QCI4
QCI5	VS.ERABReleaseIndicationERABReleasedPerQCI.QCI5
QCI6	VS.ERABReleaseIndicationERABReleasedPerQCI.QCI6
QCI7	VS.ERABReleaseIndicationERABReleasedPerQCI.QCI7
QCI8	VS.ERABReleaseIndicationERABReleasedPerQCI.QCI8

(1 of 2)

5620 SAM GUI name	eNodeB 3GPP name
QCI9	VS.ERABReleaseIndicationERABReleasedPerQCI.QCI9

(2 of 2)

Table A-24 E-RAB Release Response E-RAB Release Stats counters

5620 SAM GUI name	eNodeB 3GPP name
Failure In The Radio Interface Procedure	VS.ERABReleaseResponseERABReleaseFailure.FailureInTheRadioInterfaceProcedure
Radio Connection With UE Lost	VS.ERABReleaseResponseERABReleaseFailure.RadioConnectionWithUELost
S1 Inter-system Handover Triggered	VS.ERABReleaseResponseERABReleaseFailure.S1IntersystemHandoverTriggered
S1 Intra-system Handover Triggered	VS.ERABReleaseResponseERABReleaseFailure.S1IntrasystemHandoverTriggered
Unknown E-RAB Id	VS.ERABReleaseResponseERABReleaseFailure.UnknownERABId
Unspecified Failure	VS.ERABReleaseResponseERABReleaseFailure.Unspecified
X2 Handover Triggered	VS.ERABReleaseResponseERABReleaseFailure.X2HandoverTriggered
ERAB Release Response ERAB Release Success	VS.ERABReleaseResponseERABReleaseSuccess

Table A-25 E-RAB Setup Procedure Stats counters

5620 SAM GUI name	eNodeB 3GPP name
ERAB Setup Failed CAC Failure	VS.ERABSetupFailed.CACFailure
ERAB Setup Failed ERAB Context Allocation Failure	VS.ERABSetupFailed.ERABContextAllocationFailure
ERAB Setup Failed Interaction With Other Procedure	VS.ERABSetupFailed.InteractionWithOtherProcedure
ERAB Setup Failed Internal Failure	VS.ERABSetupFailed.InternalFailure
ERAB Setup Failed RRC Connection Reestablishment	VS.ERABSetupFailed.RRCConnectionReestablishment
ERAB Setup Failed Timeout	VS.ERABSetupFailed.Timeout

Table A-26 ENB Sync And Announce Message Stats counters

5620 SAM GUI name	eNodeB 3GPP name
Announce Messages Received	VS.AnnounceMessagesReceived
Errored Sync Messages Received	VS.ErroredSyncMessagesReceived
Sync Messages Received	VS.SyncMessagesReceived
Sync Messages Rejected	VS.SyncMessagesRejected

Table A-27 Enhanced Non-Optimized Redirections To HRPD Via Event B2 Stats counters

5620 SAM GUI name	eNodeB 3GPP name
Non Optimized Redirection To HRPD Via Event B 2 Async Mode Ue DR	VS.NonOptimizedRedirectionToHRPDViaEventB2.AsyncModeUeDR
Non Optimized Redirection To HRPD Via Event B 2 Async Mode Ue SR	VS.NonOptimizedRedirectionToHRPDViaEventB2.AsyncModeUeSR
Non Optimized Redirection To HRPD Via Event B 2 No Sys Time	VS.NonOptimizedRedirectionToHRPDViaEventB2.NoSysTime
Non Optimized Redirection To HRPD Via Event B 2 Sync Mode Ue DR	VS.NonOptimizedRedirectionToHRPDViaEventB2.SyncModeUeDR
Non Optimized Redirection To HRPD Via Event B 2 Sync Mode Ue SR	VS.NonOptimizedRedirectionToHRPDViaEventB2.SyncModeUeSR

Table A-28 Gap-Assisted Handover Stats counters

5620 SAM GUI name	eNodeB 3GPP name
Outgoing Gap Assisted HO Abort Sum	VS.OutgoingGapAssistedHOAbortSum
Outgoing Gap Assisted HO Abort Sum Inter RAT	VS.OutgoingGapAssistedHOAbortSum.InterRAT
Outgoing Gap Assisted HO Abort Sum Intra LTE	VS.OutgoingGapAssistedHOAbortSum.IntraLTE
Outgoing Gap Assisted HO Attempt	VS.OutgoingGapAssistedHOAttempt
Outgoing Gap Assisted HO Attempt Inter RAT	VS.OutgoingGapAssistedHOAttempt.InterRAT
Outgoing Gap Assisted HO Attempt Intra LTE	VS.OutgoingGapAssistedHOAttempt.IntraLTE
Outgoing Gap Assisted HO Failure Sum	VS.OutgoingGapAssistedHOFailureSum
Outgoing Gap Assisted HO Failure Sum Inter RAT	VS.OutgoingGapAssistedHOFailureSum.InterRAT
Outgoing Gap Assisted HO Failure Sum Intra LTE	VS.OutgoingGapAssistedHOFailureSum.IntraLTE
Outgoing Gap Assisted HO Success	VS.OutgoingGapAssistedHOSuccess
Outgoing Gap Assisted HO Success Inter RAT	VS.OutgoingGapAssistedHOSuccess.InterRAT
Outgoing Gap Assisted HO Success Intra LTE	VS.OutgoingGapAssistedHOSuccess.IntraLTE

Table A-29 GBR E-RAB Stats counters

5620 SAM GUI name	eNodeB 3GPP name
GBRERAB Satisfied Satisfied	VS.GBRERABSatisfied.Satisfied
GBRERAB Satisfied Unsatisfied	VS.GBRERABSatisfied.Unsatisfied

Table A-30 GEthernet interface Stats counters

5620 SAM GUI name	eNodeB 3GPP name
If In Discards	VS.IfInDiscards
If In Errors	VS.IfInErrors
If In Link Utilisation	VS.IfInLinkUtilisation
If In Link Utilisation Cum	VS.IfInLinkUtilisation.Cum
If In Link Utilisation Max	VS.IfInLinkUtilisation.Max
If In Link Utilisation Min	VS.IfInLinkUtilisation.Min
If In Link Utilisation Nb Evt	VS.IfInLinkUtilisation.NbEvt
If In Nucast Pkts	VS.IfInNucastPkts
If In Octets	VS.IfInOctets
If In Ucast Pkts	VS.IfInUcastPkts
If In Unknown Protos	VS.IfInUnknownProtos
If Out Discards	VS.IfOutDiscards
If Out Errors	VS.IfOutErrors
If Out Link Utilisation	VS.IfOutLinkUtilisation
If Out Link Utilisation Cum	VS.IfOutLinkUtilisation.Cum
If Out Link Utilisation Max	VS.IfOutLinkUtilisation.Max
If Out Link Utilisation Min	VS.IfOutLinkUtilisation.Min
If Out Link Utilisation Nb Evt	VS.IfOutLinkUtilisation.NbEvt
If Out Nucast Pkts	VS.IfOutNucastPkts
If Out Octets	VS.IfOutOctets
If Out Ucast Pkts	VS.IfOutUcastPkts

Table A-31 HO Cell Selection Stats counters

5620 SAM GUI name	eNodeB 3GPP name
Reported Cell Not Selected	VS.ReportedCellNotSelected
Reported Cell Not Selected Cell Disabled	VS.ReportedCellNotSelected.CellDisabled
Reported Cell Not Selected Mobility Not Enabled	VS.ReportedCellNotSelected.MobilityNotEnabled
S1 HO Disabled	VS.ReportedCellNotSelected.S1HODisabled
Reported Cell Not Selected Unknown PCI	VS.ReportedCellNotSelected.UnknownPCI

Table A-32 HO Inter-Cell Intra-eNodeB Stats counters

5620 SAM GUI name	eNodeB 3GPP name
Intra eNodeB HO Abort	VS.IntraENodeBHOAbort
Intra eNodeB HO Abort Screened Sum	VS.IntraENodeBHOAbortScreenedSum
Intra eNodeB HO Abort Screened Sum Inter Freq Same Frame Structure	VS.IntraENodeBHOAbortScreenedSum.InterFreqSameFrameStructure
Intra eNodeB HO Abort Sum	VS.IntraENodeBHOAbortSum
Intra eNodeB HO Abort Cs Fallback	VS.IntraENodeBHOAbort.CsFallback
Intra eNodeB HO Abort Event A 1	VS.IntraENodeBHOAbort.EventA1
S1 AP Reset Or UE Context Release Command	VS.IntraENodeBHOAbort.S1APResetOrUEContextReleaseCommand
Intra eNodeB HO Failure	VS.IntraENodeBHOFailure
Intra eNodeB HO Failure Sum	VS.IntraENodeBHOFailureSum
Intra eNodeB HO Failure CAC Failure	VS.IntraENodeBHOFailure.CACFailure
Intra eNodeB HO Failure Integrity Failure	VS.IntraENodeBHOFailure.IntegrityFailure
Intra eNodeB HO Failure Inter Freq CAC Failure	VS.IntraENodeBHOFailure.InterFreqCACFailure
Intra eNodeB HO Failure Inter Freq Integrity Failure	VS.IntraENodeBHOFailure.InterFreqIntegrityFailure
Intra eNodeB HO Failure Inter Freq Internal Failure	VS.IntraENodeBHOFailure.InterFreqInternalFailure
Intra eNodeB HO Failure Inter Freq RRC Connection Reestab On Other Cell	VS.IntraENodeBHOFailure.InterFreqRRCConnectionReestabOnOtherCell
Intra eNodeB HO Failure Inter Freq RRC Connection Reestab On Source Cell	VS.IntraENodeBHOFailure.InterFreqRRCConnectionReestabOnSourceCell
Intra eNodeB HO Failure Inter Freq RRC Connection Reestab On Target Cell	VS.IntraENodeBHOFailure.InterFreqRRCConnectionReestabOnTargetCell
Intra eNodeB HO Failure Inter Freq Timeout	VS.IntraENodeBHOFailure.InterFreqTimeout
Intra eNodeB HO Failure Internal Failure	VS.IntraENodeBHOFailure.InternalFailure
Intra eNodeB HO Failure RRC Connection Reestab On Other Cell	VS.IntraENodeBHOFailure.RRCConnectionReestabOnOtherCell
Intra eNodeB HO Failure RRC Connection Reestab On Source Cell	VS.IntraENodeBHOFailure.RRCConnectionReestabOnSourceCell
Intra eNodeB HO Failure RRC Connection Reestab On Target Cell	VS.IntraENodeBHOFailure.RRCConnectionReestabOnTargetCell
Intra eNodeB HO Failure Timeout	VS.IntraENodeBHOFailure.Timeout
Intra eNodeB HO Preparation Success	VS.IntraENodeBHOPreparationSuccess
Intra eNodeB HO Preparation Success Screened	VS.IntraENodeBHOPreparationSuccessScreened
Intra eNodeB HO Preparation Success Screened Inter Freq Same Frame Structure	VS.IntraENodeBHOPreparationSuccessScreened.InterFreqSameFrameStructure

Table A-33 HO Intra-Cell Stats counters

5620 SAM GUI name	eNodeB 3GPP name
Intra Cell HO Attempt	VS.IntraCellHOAttempt
Intra Cell HO Attempt ERAB Modify	VS.IntraCellHOAttempt.ERABModify
Intra Cell HO Attempt ERAB Setup	VS.IntraCellHOAttempt.ERABSetup
Intra Cell HO Attempt Ke NB Refresh	VS.IntraCellHOAttempt.KeNBRefresh
Intra Cell HO Attempt Rekeying	VS.IntraCellHOAttempt.Rekeying
Intra Cell HO Failure During ERAB Modify	VS.IntraCellHOFailureDuringERABModify
Intra Cell HO Failure During ERAB Setup	VS.IntraCellHOFailureDuringERABSetup
Intra Cell HO Kenode B Refresh Failure	VS.IntraCellHOKenodeBRefreshFailure
Intra Cell HO Kenode B Refresh Failure Integrity Failure	VS.IntraCellHOKenodeBRefreshFailure.IntegrityFailure
Intra Cell HO Kenode B Refresh Failure Internal Failure	VS.IntraCellHOKenodeBRefreshFailure.InternalFailure
Intra Cell HO Kenode B Refresh Failure No Security Algorithm	VS.IntraCellHOKenodeBRefreshFailure.NoSecurityAlgorithm
Intra Cell HO Kenode B Refresh Failure RRC Connection Reestablishment	VS.IntraCellHOKenodeBRefreshFailure.RRCConnectionReestablishment
Intra Cell HO Kenode B Refresh Failure Timeout	VS.IntraCellHOKenodeBRefreshFailure.Timeout
Intra Cell HO Rekeying Failure	VS.IntraCellHORekeyingFailure
Intra Cell HO Rekeying Failure Integrity Failure	VS.IntraCellHORekeyingFailure.IntegrityFailure
Intra Cell HO Rekeying Failure Internal Failure	VS.IntraCellHORekeyingFailure.InternalFailure
Intra Cell HO Rekeying Failure No Security Algorithm	VS.IntraCellHORekeyingFailure.NoSecurityAlgorithm
Intra Cell HO Rekeying Failure RRC Connection Reestablishment	VS.IntraCellHORekeyingFailure.RRCConnectionReestablishment
Intra Cell HO Rekeying Failure Timeout	VS.IntraCellHORekeyingFailure.Timeout
Intra Cell HO Success	VS.IntraCellHOSuccess
Intra Cell HO Success ERAB Modify	VS.IntraCellHOSuccess.ERABModify
Intra Cell HO Success ERAB Setup	VS.IntraCellHOSuccess.ERABSetup
Intra Cell HO Success Ke NB Refresh	VS.IntraCellHOSuccess.KeNBRefresh
Intra Cell HO Success Rekeying	VS.IntraCellHOSuccess.Rekeying

Table A-34 Incoming E-RAB Setup Stats counters

5620 SAM GUI name	eNodeB 3GPP name
Customer QCI Incoming E-RAB Setup On Intra Lte HO	VS.IncomingERABSetupOnIntraLteHO.CustomerQCIs
QCI1 Incoming E-RAB Setup On Intra Lte HO	VS.IncomingERABSetupOnIntraLteHO.QCI1
QCI2 Incoming E-RAB Setup On Intra Lte HO	VS.IncomingERABSetupOnIntraLteHO.QCI2
QCI3 Incoming E-RAB Setup On Intra Lte HO	VS.IncomingERABSetupOnIntraLteHO.QCI3
QCI4 Incoming E-RAB Setup On Intra Lte HO	VS.IncomingERABSetupOnIntraLteHO.QCI4

(1 of 2)

5620 SAM GUI name	eNodeB 3GPP name
QCI5 Incoming E-RAB Setup On Intra Lte HO	VS.IncomingERABSetupOnIntraLteHO.QCI5
QCI6 Incoming E-RAB Setup On Intra Lte HO	VS.IncomingERABSetupOnIntraLteHO.QCI6
QCI7 Incoming E-RAB Setup On Intra Lte HO	VS.IncomingERABSetupOnIntraLteHO.QCI7
QCI8 Incoming E-RAB Setup On Intra Lte HO	VS.IncomingERABSetupOnIntraLteHO.QCI8
QCI9 Incoming E-RAB Setup On Intra Lte HO	VS.IncomingERABSetupOnIntraLteHO.QCI9
Customer QCIs Incoming E-RAB To Be Setup On Intra Lte HO	VS.IncomingERABToBeSetupOnIntraLteHO.CustomerQCIs
QCI1 Incoming E-RAB To Be Setup On Intra Lte HO	VS.IncomingERABToBeSetupOnIntraLteHO.QCI1
QCI2 Incoming E-RAB To Be Setup On Intra Lte HO	VS.IncomingERABToBeSetupOnIntraLteHO.QCI2
QCI3 Incoming E-RAB To Be Setup On Intra Lte HO	VS.IncomingERABToBeSetupOnIntraLteHO.QCI3
QCI4 Incoming E-RAB To Be Setup On Intra Lte HO	VS.IncomingERABToBeSetupOnIntraLteHO.QCI4
QCI5 Incoming E-RAB To Be Setup On Intra Lte HO	VS.IncomingERABToBeSetupOnIntraLteHO.QCI5
QCI6 Incoming E-RAB To Be Setup On Intra Lte HO	VS.IncomingERABToBeSetupOnIntraLteHO.QCI6
QCI7 Incoming E-RAB To Be Setup On Intra Lte HO	VS.IncomingERABToBeSetupOnIntraLteHO.QCI7
QCI8 Incoming E-RAB To Be Setup On Intra Lte HO	VS.IncomingERABToBeSetupOnIntraLteHO.QCI8
QCI9 Incoming E-RAB To Be Setup On Intra Lte HO	VS.IncomingERABToBeSetupOnIntraLteHO.QCI9

(2 of 2)

Table A-35 Incoming E-RAB Setup Stats counters

5620 SAM GUI name	eNodeB 3GPP name
Incoming ERAB Setup On IRATHO	VS.IncomingERABSetupOnIRATHO
Customer QCIs	VS.IncomingERABSetupOnIRATHO.CustomerQCIs
QCI1	VS.IncomingERABSetupOnIRATHO.QCI1
QCI2	VS.IncomingERABSetupOnIRATHO.QCI2
QCI3	VS.IncomingERABSetupOnIRATHO.QCI3
QCI4	VS.IncomingERABSetupOnIRATHO.QCI4
QCI5	VS.IncomingERABSetupOnIRATHO.QCI5
QCI6	VS.IncomingERABSetupOnIRATHO.QCI6
QCI7	VS.IncomingERABSetupOnIRATHO.QCI7
QCI8	VS.IncomingERABSetupOnIRATHO.QCI8
QCI9	VS.IncomingERABSetupOnIRATHO.QCI9

Table A-36 Incoming E-RAB To Be Setup On IRATHO Stats counters

5620 SAM GUI name	eNodeB 3GPP name
Incoming E-RAB To Be Setup On IRATHO	VS.IncomingERABToBeSetupOnIRATHO

(1 of 2)

5620 SAM GUI name	eNodeB 3GPP name
Customer QCIs	VS.IncomingERABToBeSetupOnIRATHO.CustomerQCIs
QCI1	VS.IncomingERABToBeSetupOnIRATHO.QCI1
QCI2	VS.IncomingERABToBeSetupOnIRATHO.QCI2
QCI3	VS.IncomingERABToBeSetupOnIRATHO.QCI3
QCI4	VS.IncomingERABToBeSetupOnIRATHO.QCI4
QCI5	VS.IncomingERABToBeSetupOnIRATHO.QCI5
QCI6	VS.IncomingERABToBeSetupOnIRATHO.QCI6
QCI7	VS.IncomingERABToBeSetupOnIRATHO.QCI7
QCI8	VS.IncomingERABToBeSetupOnIRATHO.QCI8
QCI9	VS.IncomingERABToBeSetupOnIRATHO.QCI9

(2 of 2)

Table A-37 Incoming HO Inter-Cell Inter-eNodeB via S1 Stats counters

5620 SAM GUI name	eNodeB 3GPP name
Incoming Inter eNodeB S 1HO Abort	VS.IncomingInterENodeBS1HOAbort
Incoming Inter eNodeB S 1HO Abort Screened Sum	VS.IncomingInterENodeBS1HOAbortScreenedSum
Incoming Inter eNodeB S 1HO Abort Screened Sum Inter Freq Same Frame Structure	VS.IncomingInterENodeBS1HOAbortScreenedSum.InterFreqSameFrameStructure
IncomingInterENodeBS1HOAbortSum	VS.IncomingInterENodeBS1HOAbortSum
Incoming Inter eNodeB S 1HO Abort S 1APUE Context Release Command	VS.IncomingInterENodeBS1HOAbort.S1APUEContextReleaseCommand
IncomingInterENodeBS1HOAttempt	VS.IncomingInterENodeBS1HOAttempt
Incoming Inter eNodeB S 1HO Attempt Screened	VS.IncomingInterENodeBS1HOAttemptScreened
Incoming Inter eNodeB S 1HO Attempt Screened Inter Freq Same Frame Structure	VS.IncomingInterENodeBS1HOAttemptScreened.InterFreqSameFrameStructure
Incoming Inter eNodeB S 1HO Failure	VS.IncomingInterENodeBS1HOFailure
IncomingInterENodeBS1HOFailureSum	VS.IncomingInterENodeBS1HOFailureSum
Incoming Inter eNodeB S 1HO Failure CAC Failure	VS.IncomingInterENodeBS1HOFailure.CACFailure
CellNotAvailable	VS.IncomingInterENodeBS1HOFailure.CellNotAvailable
Incoming Inter eNodeB S 1HO Failure ERAB Context Allocation Failure	VS.IncomingInterENodeBS1HOFailure.ERABContextAllocationFailure
IntegrityFailure	VS.IncomingInterENodeBS1HOFailure.IntegrityFailure
InterEnbS1HOTimeout	VS.IncomingInterENodeBS1HOFailure.InterEnbS1HOTimeout
Incoming Inter eNodeB S 1HO Failure Inter Freq CAC Failure	VS.IncomingInterENodeBS1HOFailure.InterFreqCACFailure
Incoming Inter eNodeB S 1HO Failure Inter Freq Cell Not Available	VS.IncomingInterENodeBS1HOFailure.InterFreqCellNotAvailable
Incoming Inter eNodeB S 1HO Failure Inter Freq Integrity Failure	VS.IncomingInterENodeBS1HOFailure.InterFreqIntegrityFailure

(1 of 2)

5620 SAM GUI name	eNodeB 3GPP name
Incoming Inter eNodeB S 1HO Failure Inter Freq Inter Enb S 1HO Timeout	VS.IncomingInterENodeBS1HOFailure.InterFreqInterEnbS1HOTimeout
Incoming Inter eNodeB S 1HO Failure Inter Freq Internal Failure	VS.IncomingInterENodeBS1HOFailure.InterFreqInternalFailure
Incoming Inter eNodeB S 1HO Failure Inter Freq Intervention OAM	VS.IncomingInterENodeBS1HOFailure.InterFreqInterventionOAM
Incoming Inter eNodeB S 1HO Failure Inter Freq RRC Connection Reestablishment On Other Cell	VS.IncomingInterENodeBS1HOFailure.InterFreqRRCConnectionReestablishmentOnOtherCell
Incoming Inter eNodeB S 1HO Failure Inter Freq RRC Connection Reestablishment On Target Cell	VS.IncomingInterENodeBS1HOFailure.InterFreqRRCConnectionReestablishmentOnTargetCell
Incoming Inter eNodeB S 1HO Failure Inter Freq Security Algo Not Compatible	VS.IncomingInterENodeBS1HOFailure.InterFreqSecurityAlgoNotCompatible
Incoming Inter eNodeB S 1HO Failure Internal Failure	VS.IncomingInterENodeBS1HOFailure.InternalFailure
Incoming Inter eNodeB S 1HO Failure Intervention OAM	VS.IncomingInterENodeBS1HOFailure.InterventionOAM
RRCConnectionReestablishmentOnOtherCell	VS.IncomingInterENodeBS1HOFailure.RRCConnectionReestablishmentOnOtherCell
RRCConnectionReestablishmentOnTargetCell	VS.IncomingInterENodeBS1HOFailure.RRCConnectionReestablishmentOnTargetCell
SecurityAlgoNotCompatible	VS.IncomingInterENodeBS1HOFailure.SecurityAlgoNotCompatible
Incoming Inter eNodeB S 1HO Preparation Success	VS.IncomingInterENodeBS1HOPreparationSuccess
Incoming Inter eNodeB S 1HO Preparation Success Screened	VS.IncomingInterENodeBS1HOPreparationSuccessScreened
Incoming Inter eNodeB S 1HO Preparation Success Screened Inter Freq Same Frame Structure	VS.IncomingInterENodeBS1HOPreparationSuccessScreened.InterFreqSameFrameStructure
IncomingInterENodeBS1HOSuccess	VS.IncomingInterENodeBS1HOSuccess
Incoming Inter eNodeB S 1HO Success Screened	VS.IncomingInterENodeBS1HOSuccessScreened
Incoming Inter eNodeB S 1HO Success Screened Inter Freq Same Frame Structure	VS.IncomingInterENodeBS1HOSuccessScreened.InterFreqSameFrameStructure

(2 of 2)

Table A-38 Incoming HO Inter-Cell Inter-eNodeB via X2 Stats counters

5620 SAM GUI name	eNodeB 3GPP name
Incoming Inter eNodeB X 2HO Abort Screened Sum	VS.IncomingInterENodeBX2HOAbortScreenedSum
Incoming Inter eNodeB X 2HO Abort Screened Sum Inter Freq Same Frame Structure	VS.IncomingInterENodeBX2HOAbortScreenedSum.InterFreqSameFrameStructure
Incoming Inter eNodeB X 2HO Abort Sum	VS.IncomingInterENodeBX2HOAbortSum
Incoming Inter eNodeB X 2HO Abort X 2APHO Cancel	VS.IncomingInterENodeBX2HOAbort.X2APHOCancel
Incoming Inter eNodeB X 2HO Abort X 2AP Reset	VS.IncomingInterENodeBX2HOAbort.X2APReset
Incoming Inter-ENodeB X2 HO Attempt	VS.IncomingInterENodeBX2HOAttempt
Incoming Inter eNodeB X 2HO Attempt Screened	VS.IncomingInterENodeBX2HOAttemptScreened

(1 of 3)

5620 SAM GUI name	eNodeB 3GPP name
Incoming Inter eNodeB X 2HO Attempt Screened Inter Freq Same Frame Structure	VS.IncomingInterENodeBX2HOAttemptScreened.InterFreqSameFrameStructure
Incoming Inter-ENodeB X2 HO Failure Sum	VS.IncomingInterENodeBX2HOFailureSum
X2 HO - CAC Failure	VS.IncomingInterENodeBX2HOFailure.CACFailure
Incoming Inter eNodeB X 2HO Failure Cell Not Available	VS.IncomingInterENodeBX2HOFailure.CellNotAvailable
Incoming Inter eNodeB X 2HO Failure ERAB Context Allocation Failure	VS.IncomingInterENodeBX2HOFailure.ERABContextAllocationFailure
Incoming Inter eNodeB X 2HO Failure Integrity Failure	VS.IncomingInterENodeBX2HOFailure.IntegrityFailure
Incoming Inter-ENodeB X2 - Inter-ENodeB HO Timeout	VS.IncomingInterENodeBX2HOFailure.InterEnbHOTimeout
Incoming Inter eNodeB X 2HO Failure Inter Freq CAC Failure	VS.IncomingInterENodeBX2HOFailure.InterFreqCACFailure
Incoming Inter eNodeB X 2HO Failure Inter Freq Cell Not Available	VS.IncomingInterENodeBX2HOFailure.InterFreqCellNotAvailable
Incoming Inter eNodeB X 2HO Failure Inter Freq Integrity Failure	VS.IncomingInterENodeBX2HOFailure.InterFreqIntegrityFailure
Incoming Inter eNodeB X 2HO Failure Inter Freq Inter Enb HO Timeout	VS.IncomingInterENodeBX2HOFailure.InterFreqInterEnbHOTimeout
Incoming Inter eNodeB X 2HO Failure Inter Freq Internal Failure	VS.IncomingInterENodeBX2HOFailure.InterFreqInternalFailure
Incoming Inter eNodeB X 2HO Failure Inter Freq Intervention OAM	VS.IncomingInterENodeBX2HOFailure.InterFreqInterventionOAM
Incoming Inter eNodeB X 2HO Failure Inter Freq Path Switch Failure	VS.IncomingInterENodeBX2HOFailure.InterFreqPathSwitchFailure
Incoming Inter eNodeB X 2HO Failure Inter Freq RRC Connection Reestablishment On Other Cell	VS.IncomingInterENodeBX2HOFailure.InterFreqRRCConnectionReestablishmentOnOtherCell
Incoming Inter eNodeB X 2HO Failure Inter Freq RRC Connection Reestablishment On Target Cell	VS.IncomingInterENodeBX2HOFailure.InterFreqRRCConnectionReestablishmentOnTargetCell
Inter-Freq S1 Fault External Failure	VS.IncomingInterENodeBX2HOFailure.InterFreqS1FaultExternalFailure
Inter-Freq S1 Path Switch Timeout	VS.IncomingInterENodeBX2HOFailure.InterFreqS1PathSwitchTimeout
Incoming Inter eNodeB X 2HO Failure Inter Freq Security Algo Not Compatible	VS.IncomingInterENodeBX2HOFailure.InterFreqSecurityAlgoNotCompatible
Incoming Inter-ENodeB X2 - Internal Failure	VS.IncomingInterENodeBX2HOFailure.InternalFailure
X2 HO - Intervention OAM	VS.IncomingInterENodeBX2HOFailure.InterventionOAM
Incoming Inter-ENodeB X2 - Path Switch Failure	VS.IncomingInterENodeBX2HOFailure.PathSwitchFailure
Incoming Inter eNodeB X 2HO Failure RRC Connection Reestablishment On Other Cell	VS.IncomingInterENodeBX2HOFailure.RRCConnectionReestablishmentOnOtherCell
Incoming Inter eNodeB X 2HO Failure RRC Connection Reestablishment On Target Cell	VS.IncomingInterENodeBX2HOFailure.RRCConnectionReestablishmentOnTargetCell
S1 Fault External Failure	VS.IncomingInterENodeBX2HOFailure.S1FaultExternalFailure
S1 Path Switch Timeout	VS.IncomingInterENodeBX2HOFailure.S1PathSwitchTimeout
Incoming Inter eNodeB X 2HO Failure Security Algo Not Compatible	VS.IncomingInterENodeBX2HOFailure.SecurityAlgoNotCompatible

(2 of 3)

5620 SAM GUI name	eNodeB 3GPP name
Incoming Inter eNodeB X 2HO Preparation Success	VS.IncomingInterENodeBX2HOPreparationSuccess
Incoming Inter eNodeB X 2HO Preparation Success Screened	VS.IncomingInterENodeBX2HOPreparationSuccessScreened
Incoming Inter eNodeB X 2HO Preparation Success Screened Inter Freq Same Frame Structure	VS.IncomingInterENodeBX2HOPreparationSuccessScreened.InterFreqSameFrameStructure
Incoming Inter-ENodeB X2 HO Success	VS.IncomingInterENodeBX2HOSuccess
Incoming Inter eNodeB X 2HO Success Screened	VS.IncomingInterENodeBX2HOSuccessScreened
Incoming Inter eNodeB X 2HO Success Screened Inter Freq Same Frame Structure	VS.IncomingInterENodeBX2HOSuccessScreened.InterFreqSameFrameStructure

(3 of 3)

Table A-39 Incoming HO Inter-Cell Intra-eNodeB Stats counters

5620 SAM GUI name	eNodeB 3GPP name
Incoming Intra eNodeB HO Attempt	VS.IncomingIntraENodeBHOAttempt
Incoming Intra eNodeB HO Attempt Screened	VS.IncomingIntraENodeBHOAttemptScreened
Incoming Intra eNodeB HO Attempt Screened Inter Freq Same Frame Structure	VS.IncomingIntraENodeBHOAttemptScreened.InterFreqSameFrameStructure
Incoming Intra eNodeB HO Success	VS.IncomingIntraENodeBHOSuccess
Incoming Intra eNodeB HO Success Screened	VS.IncomingIntraENodeBHOSuccessScreened
Incoming Intra eNodeB HO Success Screened Inter Freq Same Frame Structure	VS.IncomingIntraENodeBHOSuccessScreened.InterFreqSameFrameStructure

Table A-40 Incoming PS Handover From UTRA Stats counters

5620 SAM GUI name	eNodeB 3GPP name
Incoming PS HO From Utran Abort	VS.IncomingPSHOFromUtranAbort
Incoming PS HO From Utran Abort Sum	VS.IncomingPSHOFromUtranAbortSum
S1 AP UE Context Release Command	VS.IncomingPSHOFromUtranAbort.S1APUEContextReleaseCommand
Incoming PSHO From Utran Attempt	VS.IncomingPSHOFromUtranAttempt
Incoming PS HO From Utran Failure	VS.IncomingPSHOFromUtranFailure
Incoming PSHO From Utran Failure Sum	VS.IncomingPSHOFromUtranFailureSum
Incoming PSHO From Utran Failure CAC Failure	VS.IncomingPSHOFromUtranFailure.CACFailure
Cell Not Available	VS.IncomingPSHOFromUtranFailure.CellNotAvailable
IncomingPSHOFromUtranFailure.IntegrityFailure	VS.IncomingPSHOFromUtranFailure.IntegrityFailure
Internal Failure	VS.IncomingPSHOFromUtranFailure.InternalFailure
Inter-RAT Incoming Ho Timeout	VS.IncomingPSHOFromUtranFailure.interRATIncomingHoTimeout

(1 of 2)

5620 SAM GUI name	eNodeB 3GPP name
Incoming PSHO From Utran Failure Intervention OAM	VS.IncomingPSHOFromUtranFailure.InterventionOAM
RRC Connection Reestablishment On Other Cell	VS.IncomingPSHOFromUtranFailure.RRCConnectionReestablishmentOnOtherCell
RRC Connection Reestablishment On Target Cell	VS.IncomingPSHOFromUtranFailure.RRCConnectionReestablishmentOnTargetCell
Security Algo Not Compatible	VS.IncomingPSHOFromUtranFailure.SecurityAlgoNotCompatible
Incoming PSHO From Utran Preparation Success	VS.IncomingPSHOFromUtranPreparationSuccess
Incoming PSHO From Utran Success	VS.IncomingPSHOFromUtranSuccess

(2 of 2)

Table A-41 Initial E-RAB Setup Stats counters

5620 SAM GUI name	eNodeB 3GPP name
Initial ERAB Setup Request Customer QC Is	VS.InitialERABSetupRequest.CustomerQCIs
Initial ERAB Setup Request QC I 1	VS.InitialERABSetupRequest.QCI1
Initial ERAB Setup Request QC I 2	VS.InitialERABSetupRequest.QCI2
Initial ERAB Setup Request QC I 3	VS.InitialERABSetupRequest.QCI3
Initial ERAB Setup Request QC I 4	VS.InitialERABSetupRequest.QCI4
Initial ERAB Setup Request QC I 5	VS.InitialERABSetupRequest.QCI5
Initial ERAB Setup Request QC I 6	VS.InitialERABSetupRequest.QCI6
Initial ERAB Setup Request QC I 7	VS.InitialERABSetupRequest.QCI7
Initial ERAB Setup Request QC I 8	VS.InitialERABSetupRequest.QCI8
Initial ERAB Setup Request QC I 9	VS.InitialERABSetupRequest.QCI9
Initial ERAB Setup Success Customer QC Is	VS.InitialERABSetupSuccess.CustomerQCIs
Initial ERAB Setup Success QC I 1	VS.InitialERABSetupSuccess.QCI1
Initial ERAB Setup Success QC I 2	VS.InitialERABSetupSuccess.QCI2
Initial ERAB Setup Success QC I 3	VS.InitialERABSetupSuccess.QCI3
Initial ERAB Setup Success QC I 4	VS.InitialERABSetupSuccess.QCI4
Initial ERAB Setup Success QC I 5	VS.InitialERABSetupSuccess.QCI5
Initial ERAB Setup Success QC I 6	VS.InitialERABSetupSuccess.QCI6
Initial ERAB Setup Success QC I 7	VS.InitialERABSetupSuccess.QCI7
Initial ERAB Setup Success QC I 8	VS.InitialERABSetupSuccess.QCI8
Initial ERAB Setup Success QC I 9	VS.InitialERABSetupSuccess.QCI9

Table A-42 L1 Connection Stats counters

5620 SAM GUI name	eNodeB 3GPP name
L 1 Connection Request	VS.L1ConnectionRequest
PUCCHCQI Period Histogram 40ms	VS.PUCCHCQIPeriodHistogram.40ms
PUCCHCQI Period Histogram 80ms	VS.PUCCHCQIPeriodHistogram.80ms
PUCCHCQI Period Histogram G T 80ms	VS.PUCCHCQIPeriodHistogram.GT80ms
PUCCHCQI Period Histogram L E 20ms	VS.PUCCHCQIPeriodHistogram.LE20ms
PUCCHSR Period Histogram 40ms	VS.PUCCHSRPeriodHistogram.40ms
PUCCHSR Period Histogram 80ms	VS.PUCCHSRPeriodHistogram.80ms
PUCCHSR Period Histogram G T 80ms	VS.PUCCHSRPeriodHistogram.GT80ms
PUCCHSR Period Histogram L E 20ms	VS.PUCCHSRPeriodHistogram.LE20ms
PUCCHSRS Period Histogram 40ms	VS.PUCCHSRSPeriodHistogram.40ms
PUCCHSRS Period Histogram 80ms	VS.PUCCHSRSPeriodHistogram.80ms
PUCCHSRS Period Histogram G T 80ms	VS.PUCCHSRSPeriodHistogram.GT80ms
PUCCHSRS Period Histogram L E 20ms	VS.PUCCHSRSPeriodHistogram.LE20ms

Table A-43 L1 Traffic and throughput MAC-BLER counters

5620 SAM GUI name	eNodeB 3GPP name
DL Initial Mac BLERGT Threshold 1LE Threshold 2	VS.DLInitialMacBLER.GTThreshold1LEThreshold2
DL Initial Mac BLERGT Threshold 2LE Threshold 3	VS.DLInitialMacBLER.GTThreshold2LEThreshold3
DL Initial Mac BLERGT Threshold 3LE Threshold 4	VS.DLInitialMacBLER.GTThreshold3LEThreshold4
DL Initial Mac BLERGT Threshold 4	VS.DLInitialMacBLER.GTThreshold4
DL Initial Mac BLERLE Threshold 1	VS.DLInitialMacBLER.LEThreshold1
DL Residual Mac BLERGT Threshold 1LE Threshold 2	VS.DLResidualMacBLER.GTThreshold1LEThreshold2
DL Residual Mac BLERGT Threshold 2LE Threshold 3	VS.DLResidualMacBLER.GTThreshold2LEThreshold3
DL Residual Mac BLERGT Threshold 3LE Threshold 4	VS.DLResidualMacBLER.GTThreshold3LEThreshold4
DL Residual Mac BLERGT Threshold 4	VS.DLResidualMacBLER.GTThreshold4
DL Residual Mac BLERLE Threshold 1	VS.DLResidualMacBLER.LEThreshold1
UL Initial Mac BLERGT Threshold 1LE Threshold 2	VS.ULInitialMacBLER.GTThreshold1LEThreshold2
UL Initial Mac BLERGT Threshold 2LE Threshold 3	VS.ULInitialMacBLER.GTThreshold2LEThreshold3
UL Initial Mac BLERGT Threshold 3LE Threshold 4	VS.ULInitialMacBLER.GTThreshold3LEThreshold4
UL Initial Mac BLERGT Threshold 4	VS.ULInitialMacBLER.GTThreshold4
UL Initial Mac BLERLE Threshold 1	VS.ULInitialMacBLER.LEThreshold1
UL Residual Mac BLERGT Threshold 1LE Threshold 2	VS.ULResidualMacBLER.GTThreshold1LEThreshold2
UL Residual Mac BLERGT Threshold 2LE Threshold 3	VS.ULResidualMacBLER.GTThreshold2LEThreshold3
UL Residual Mac BLERGT Threshold 3LE Threshold 4	VS.ULResidualMacBLER.GTThreshold3LEThreshold4

(1 of 2)

5620 SAM GUI name	eNodeB 3GPP name
UL Residual Mac BLERGT Threshold 4	VS.ULResidualMacBLER.GTThreshold4
UL Residual Mac BLERLE Threshold 1	VS.ULResidualMacBLER.LEThreshold1

(2 of 2)

Table A-44 L2 Traffic - SYNC PDU Stats counters

5620 SAM GUI name	eNodeB 3GPP name
Mbms User Packets Expected By Sync Layer	VS.MbmsUserPacketsExpectedBySyncLayer
Mbms User Packets Received By Rlc	VS.MbmsUserPacketsReceivedByRlc
Mbms User Packets Received By Sync Layer	VS.MbmsUserPacketsReceivedBySyncLayer

Table A-45 L2 Traffic - SYNC sequence Stats counters

5620 SAM GUI name	eNodeB 3GPP name
M1 SYNC Sequences Delay	VS.M1SyncSequencesDelay
M1 SYNC Sequences Received Too Early	VS.M1SyncSequencesReceivedTooEarly
M1 Sync Sequences Received Too Late	VS.M1SyncSequencesReceivedTooLate

Table A-46 Layer 0 wideband CQI reported in MIMO Stats counters

5620 SAM GUI name	eNodeB 3GPP name
Layer 0 Mimo WB Cqi Reported Cqi 0	VS.Layer0MimoWBCqiReported.Cqi0
Layer 0 Mimo WB Cqi Reported Cqi 1	VS.Layer0MimoWBCqiReported.Cqi1
Layer 0 Mimo WB Cqi Reported Cqi 10	VS.Layer0MimoWBCqiReported.Cqi10
Layer 0 Mimo WB Cqi Reported Cqi 11	VS.Layer0MimoWBCqiReported.Cqi11
Layer 0 Mimo WB Cqi Reported Cqi 12	VS.Layer0MimoWBCqiReported.Cqi12
Layer 0 Mimo WB Cqi Reported Cqi 13	VS.Layer0MimoWBCqiReported.Cqi13
Layer 0 Mimo WB Cqi Reported Cqi 14	VS.Layer0MimoWBCqiReported.Cqi14
Layer 0 Mimo WB Cqi Reported Cqi 15	VS.Layer0MimoWBCqiReported.Cqi15
Layer 0 Mimo WB Cqi Reported Cqi 2	VS.Layer0MimoWBCqiReported.Cqi2
Layer 0 Mimo WB Cqi Reported Cqi 3	VS.Layer0MimoWBCqiReported.Cqi3
Layer 0 Mimo WB Cqi Reported Cqi 4	VS.Layer0MimoWBCqiReported.Cqi4
Layer 0 Mimo WB Cqi Reported Cqi 5	VS.Layer0MimoWBCqiReported.Cqi5
Layer 0 Mimo WB Cqi Reported Cqi 6	VS.Layer0MimoWBCqiReported.Cqi6
Layer 0 Mimo WB Cqi Reported Cqi 7	VS.Layer0MimoWBCqiReported.Cqi7
Layer 0 Mimo WB Cqi Reported Cqi 8	VS.Layer0MimoWBCqiReported.Cqi8

(1 of 2)

5620 SAM GUI name	eNodeB 3GPP name
Layer 0 Mimo WB Cqi Reported Cqi 9	VS.Layer0MimoWBCqiReported.Cqi9

(2 of 2)

Table A-47 Layer 1 wideband CQI reported in MIMO Stats counters

5620 SAM GUI name	eNodeB 3GPP name
Layer 1WB Cqi Reported Cqi 0	VS.Layer1WBCqiReported.Cqi0
Layer 1WB Cqi Reported Cqi 1	VS.Layer1WBCqiReported.Cqi1
Layer 1WB Cqi Reported Cqi 10	VS.Layer1WBCqiReported.Cqi10
Layer 1WB Cqi Reported Cqi 11	VS.Layer1WBCqiReported.Cqi11
Layer 1WB Cqi Reported Cqi 12	VS.Layer1WBCqiReported.Cqi12
Layer 1WB Cqi Reported Cqi 13	VS.Layer1WBCqiReported.Cqi13
Layer 1WB Cqi Reported Cqi 14	VS.Layer1WBCqiReported.Cqi14
Layer 1WB Cqi Reported Cqi 15	VS.Layer1WBCqiReported.Cqi15
Layer 1WB Cqi Reported Cqi 2	VS.Layer1WBCqiReported.Cqi2
Layer 1WB Cqi Reported Cqi 3	VS.Layer1WBCqiReported.Cqi3
Layer 1WB Cqi Reported Cqi 4	VS.Layer1WBCqiReported.Cqi4
Layer 1WB Cqi Reported Cqi 5	VS.Layer1WBCqiReported.Cqi5
Layer 1WB Cqi Reported Cqi 6	VS.Layer1WBCqiReported.Cqi6
Layer 1WB Cqi Reported Cqi 7	VS.Layer1WBCqiReported.Cqi7
Layer 1WB Cqi Reported Cqi 8	VS.Layer1WBCqiReported.Cqi8
Layer 1WB Cqi Reported Cqi 9	VS.Layer1WBCqiReported.Cqi9

Table A-48 Local UE Context Release Stats counters

5620 SAM GUI name	eNodeB 3GPP name
Local UE Context Release Sum	VS.LocalUEContextReleaseSum
Local UE Context Release No Context Release Command	VS.LocalUEContextRelease.NoContextReleaseCommand
S1 AP Reset ENodeB	VS.LocalUEContextRelease.S1APResetENodeB
S1 AP Reset MME	VS.LocalUEContextRelease.S1APResetMME
S1 Fault External Failure	VS.LocalUEContextRelease.S1FaultExternalFailure

Table A-49 M1 Traffic Stats counters

5620 SAM GUI name	eNodeB 3GPP name
M1 Gtp Payload Kbytes Received	VS.M1GtpPayloadKbytesReceived

Table A-50 Non-GBR E-RAB RLC Downlink Throughput Stats counters

5620 SAM GUI name	eNodeB 3GPP name
Non GBRERAB Rlc Throughput Dl GT Range 1 Le Range 2	VS.NonGBRERABRlcThroughputDl.GTRange1LeRange2
Non GBRERAB Rlc Throughput Dl GT Range 2 Le Range 3	VS.NonGBRERABRlcThroughputDl.GTRange2LeRange3
Non GBRERAB Rlc Throughput Dl GT Range 3 Le Range 4	VS.NonGBRERABRlcThroughputDl.GTRange3LeRange4
Non GBRERAB Rlc Throughput Dl GT Range 4	VS.NonGBRERABRlcThroughputDl.GTRange4
Non GBRERAB Rlc Throughput Dl Le Range 1	VS.NonGBRERABRlcThroughputDl.LeRange1

Table A-51 Non-GBR E-RAB RLC Uplink Throughput Stats counters

5620 SAM GUI name	eNodeB 3GPP name
Non GBRERAB Rlc Throughput Ul GT Range 1 Le Range 2	VS.NonGBRERABRlcThroughputUl.GTRange1LeRange2
Non GBRERAB Rlc Throughput Ul GT Range 2 Le Range 3	VS.NonGBRERABRlcThroughputUl.GTRange2LeRange3
Non GBRERAB Rlc Throughput Ul GT Range 3 Le Range 4	VS.NonGBRERABRlcThroughputUl.GTRange3LeRange4
Non GBRERAB Rlc Throughput Ul GT Range 4	VS.NonGBRERABRlcThroughputUl.GTRange4
Non GBRERAB Rlc Throughput Ul Le Range 1	VS.NonGBRERABRlcThroughputUl.LeRange1

Table A-52 Number Of Bearers Per Cell counters

5620 SAM GUI name	eNodeB 3GPP name
Nb Bearers Per Cell	VS.NbBearersPerCell
Nb GBR Bearers Per Cell	VS.NbGBRBearersPerCell
Nb Non GBR Bearers Per Cell	VS.NbNonGBRBearersPerCell
Nb Vo IP Bearers Per Cell	VS.NbVoIPBearersPerCell

Table A-53 Number Of Bearers Per eNodeB counters

5620 SAM GUI name	eNodeB 3GPP name
Nb Bearers Per eNodeB	VS.NbBearersPerENodeB
Nb GBR Bearers Per eNodeB	VS.NbGBRBearersPerENodeB
Nb Non GBR Bearers Per eNodeB	VS.NbNonGBRBearersPerENodeB
Nb Vo IP Bearers Per eNodeB	VS.NbVoIPBearersPerENodeB

Table A-54 OAM VLAN Stats counters

5620 SAM GUI name	eNodeB 3GPP name
OAM In Octets	VS.OAMInOctets
OAM In Packets	VS.OAMInPackets
OAM Out Octets	VS.OAMOutOctets
OAM Out Packets	VS.OAMOutPackets
Telecom In Octets	VS.TelecomInOctets
Telecom In Packets	VS.TelecomInPackets
Telecom Out Octets	VS.TelecomOutOctets
Telecom Out Packets	VS.TelecomOutPackets

Table A-55 Outgoing HO Inter-Cell Inter-eNodeB via S1 Stats counters

5620 SAM GUI name	eNodeB 3GPP name
Outgoing Inter eNodeB S 1HO Abort	VS.OutgoingInterENodeBS1HOAbort
OutgoingInterENodeBS1HOAbortScreenedSum	VS.OutgoingInterENodeBS1HOAbortScreenedSum
Outgoing Inter eNodeB S 1HO Abort Screened Sum Inter Freq Same Frame Structure	VS.OutgoingInterENodeBS1HOAbortScreenedSum.InterFreqSameFrameStructure
OutgoingInterENodeBS1HOAbortSum	VS.OutgoingInterENodeBS1HOAbortSum
Outgoing Inter eNodeB S 1HO Abort Cascaded Handover	VS.OutgoingInterENodeBS1HOAbort.CascadedHandover
Outgoing Inter eNodeB S 1HO Abort Cs Fallback	VS.OutgoingInterENodeBS1HOAbort.CsFallback
Outgoing Inter eNodeB S 1HO Abort Event A 1	VS.OutgoingInterENodeBS1HOAbort.EventA1
Other S1 Abort	VS.OutgoingInterENodeBS1HOAbort.Other
Outgoing Inter-ENodeB S1 HO Attempt	VS.OutgoingInterENodeBS1HOAttempt
OutgoingInterENodeBS1HOAttemptScreened	VS.OutgoingInterENodeBS1HOAttemptScreened
Outgoing Inter eNodeB S 1HO Attempt Screened Inter Freq Same Frame Structure	VS.OutgoingInterENodeBS1HOAttemptScreened.InterFreqSameFrameStructure
Outgoing Inter eNodeB S 1HO Failure	VS.OutgoingInterENodeBS1HOFailure
Outgoing Inter-ENodeB S1 HO Failure Sum	VS.OutgoingInterENodeBS1HOFailureSum
Outgoing Inter eNodeB S 1HO Failure HO Preparation Failure	VS.OutgoingInterENodeBS1HOFailure.HOPreparationFailure
Outgoing Inter eNodeB S 1HO Failure Inter Freq HO Preparation Failure	VS.OutgoingInterENodeBS1HOFailure.InterFreqHOPreparationFailure
Outgoing Inter eNodeB S 1HO Failure Inter Freq Radio Link Failure	VS.OutgoingInterENodeBS1HOFailure.InterFreqRadioLinkFailure
Outgoing Inter eNodeB S 1HO Failure Inter Freq RRC Connection Reestablishment On Other Cell	VS.OutgoingInterENodeBS1HOFailure.InterFreqRRCConnectionReestablishmentOnOtherCell
Outgoing Inter eNodeB S 1HO Failure Inter Freq RRC Connection Reestablishment On Source Cell	VS.OutgoingInterENodeBS1HOFailure.InterFreqRRCConnectionReestablishmentOnSourceCell

(1 of 2)

5620 SAM GUI name	eNodeB 3GPP name
InterFreqTS1RelocOverallForS1HOTimeout	VS.OutgoingInterENodeBS1HOFailure.InterFreqTS1RelocOverallForS1HOTimeout
InterFreqTS1RelocPrepForS1HOTimeout	VS.OutgoingInterENodeBS1HOFailure.InterFreqTS1RelocPrepForS1HOTimeout
Outgoing Inter eNodeB S 1HO Failure Radio Link Failure	VS.OutgoingInterENodeBS1HOFailure.RadioLinkFailure
Outgoing Inter eNodeB S 1HO Failure RRC Connection Reestablishment On Other Cell	VS.OutgoingInterENodeBS1HOFailure.RRCConnectionReestablishmentOnOtherCell
Outgoing Inter eNodeB S 1HO Failure RRC Connection Reestablishment On Source Cell	VS.OutgoingInterENodeBS1HOFailure.RRCConnectionReestablishmentOnSourceCell
TS1RelocOverallForS1HOTimeout	VS.OutgoingInterENodeBS1HOFailure.TS1RelocOverallForS1HOTimeout
TS1 Reloc Prep For S1 HO Timeout	VS.OutgoingInterENodeBS1HOFailure.TS1RelocPrepForS1HOTimeout
OutgoingInterENodeBS1HOPreparationSuccess	VS.OutgoingInterENodeBS1HOPreparationSuccess
OutgoingInterENodeBS1HOPreparationSuccessScreened	VS.OutgoingInterENodeBS1HOPreparationSuccessScreened
Outgoing Inter eNodeB S 1HO Preparation Success Screened Inter Freq Same Frame Structure	VS.OutgoingInterENodeBS1HOPreparationSuccessScreened.InterFreqSameFrameStructure
Outgoing Inter-ENodeB S1 HO Success	VS.OutgoingInterENodeBS1HOSuccess
OutgoingInterENodeBS1HOSuccessScreened	VS.OutgoingInterENodeBS1HOSuccessScreened
Outgoing Inter eNodeB S 1HO Success Screened Inter Freq Same Frame Structure	VS.OutgoingInterENodeBS1HOSuccessScreened.InterFreqSameFrameStructure

(2 of 2)

Table A-56 Outgoing HO Inter-Cell Inter-eNodeB via X2 Stats counters

5620 SAM GUI name	eNodeB 3GPP name
Outgoing Inter eNodeB X 2HO Abort Screened Sum	VS.OutgoingInterENodeBX2HOAbortScreenedSum
Outgoing Inter eNodeB X 2HO Abort Screened Sum Inter Freq Same Frame Structure	VS.OutgoingInterENodeBX2HOAbortScreenedSum.InterFreqSameFrameStructure
X2 HO Abort Sum	VS.OutgoingInterENodeBX2HOAbortSum
Outgoing Inter eNodeB X 2HO Abort Cascaded Handover	VS.OutgoingInterENodeBX2HOAbort.CascadedHandover
Outgoing Inter eNodeB X 2HO Abort Cs Fallback	VS.OutgoingInterENodeBX2HOAbort.CsFallback
Abort Event A1	VS.OutgoingInterENodeBX2HOAbort.EventA1
Outgoing Inter eNodeB X 2HO Abort Other	VS.OutgoingInterENodeBX2HOAbort.Other
X2 AP Reset	VS.OutgoingInterENodeBX2HOAbort.X2APReset
X2 HO Attempt	VS.OutgoingInterENodeBX2HOAttempt
Outgoing Inter eNodeB X 2HO Attempt Screened Inter Freq Same Frame Structure	VS.OutgoingInterENodeBX2HOAttemptScreened.InterFreqSameFrameStructure
X2 HO Failure	VS.OutgoingInterENodeBX2HOFailure
X2 HO Failure Sum	VS.OutgoingInterENodeBX2HOFailureSum
Outgoing Inter eNodeB X 2HO Failure HO Preparation Failure Other	VS.OutgoingInterENodeBX2HOFailure.HOPreparationFailureOther

(1 of 2)

5620 SAM GUI name	eNodeB 3GPP name
Outgoing Inter eNodeB X 2HO Failure Inter Freq HO Preparation Failure Other	VS.OutgoingInterENodeBX2HOFailure.InterFreqHOPreparationFailureOther
Outgoing Inter eNodeB X 2HO Failure Inter Freq RRC Connection Reestablishment On Other Cell	VS.OutgoingInterENodeBX2HOFailure.InterFreqRRCConnectionReestablishmentOnOtherCell
Outgoing Inter eNodeB X 2HO Failure Inter Freq RRC Connection Reestablishment On Source Cell	VS.OutgoingInterENodeBX2HOFailure.InterFreqRRCConnectionReestablishmentOnSourceCell
Inter-Freq X2 Preparation Timeout	VS.OutgoingInterENodeBX2HOFailure.InterFreqX2PreparationTimeout
Inter-Freq X2 Release Timeout	VS.OutgoingInterENodeBX2HOFailure.InterFreqX2ReleaseTimeout
Outgoing Inter eNodeB X 2HO Failure Radio Link Failure	VS.OutgoingInterENodeBX2HOFailure.RadioLinkFailure
Outgoing Inter eNodeB X 2HO Failure RRC Connection Reestablishment On Other Cell	VS.OutgoingInterENodeBX2HOFailure.RRCConnectionReestablishmentOnOtherCell
Outgoing Inter eNodeB X 2HO Failure RRC Connection Reestablishment On Source Cell	VS.OutgoingInterENodeBX2HOFailure.RRCConnectionReestablishmentOnSourceCell
Outgoing Inter eNodeB X 2HO Failure X 2 Preparation Timeout	VS.OutgoingInterENodeBX2HOFailure.X2PreparationTimeout
Outgoing Inter eNodeB X 2HO Failure X 2 Release Timeout	VS.OutgoingInterENodeBX2HOFailure.X2ReleaseTimeout
X2 HO Preparation Success	VS.OutgoingInterENodeBX2HOPreparationSuccess
Outgoing Inter eNodeB X 2HO Preparation Success Screened Inter Freq Same Frame Structure	VS.OutgoingInterENodeBX2HOPreparationSuccessScreened.InterFreqSameFrameStructure
X2 HO Success	VS.OutgoingInterENodeBX2HOSuccess
Outgoing Inter eNodeB X 2HO Success Screened Inter Freq Same Frame Structure	VS.OutgoingInterENodeBX2HOSuccessScreened.InterFreqSameFrameStructure

(2 of 2)

Table A-57 Outgoing HO Inter-Cell Intra-eNodeB Stats counters

5620 SAM GUI name	eNodeB 3GPP name
Outgoing Intra eNodeB HO Attempt	VS.OutgoingIntraENodeBHOAttempt
Outgoing Intra eNodeB HO Attempt Screened	VS.OutgoingIntraENodeBHOAttemptScreened
Outgoing Intra eNodeB HO Attempt Screened Inter Freq Same Frame Structure	VS.OutgoingIntraENodeBHOAttemptScreened.InterFreqSameFrameStructure
Outgoing Intra eNodeB HO Success	VS.OutgoingIntraENodeBHOSuccess
Outgoing Intra eNodeB HO Success Screened Inter Freq Same Frame Structure	VS.OutgoingIntraENodeBHOSuccessScreened.InterFreqSameFrameStructure

Table A-58 Outgoing PS Handover To UTRAN FDD Failure And Abort Stats counters

5620 SAM GUI name	eNodeB 3GPP name
Outgoing PSHO To Utra Fdd Abort	VS.OutgoingPSHOToUtraFddAbort
Outgoing PSHO To Utra Fdd Abort Sum	VS.OutgoingPSHOToUtraFddAbortSum

(1 of 2)

5620 SAM GUI name	eNodeB 3GPP name
Outgoing PSHO To Utra Fdd Abort Cascaded Handover	VS.OutgoingPSHOToUtraFddAbort.CascadedHandover
Outgoing PSHO To Utra Fdd Abort Cs Fallback	VS.OutgoingPSHOToUtraFddAbort.CsFallback
Outgoing PSHO To Utra Fdd Abort Event A 1	VS.OutgoingPSHOToUtraFddAbort.EventA1
Outgoing PSHO To Utra Fdd Abort Other	VS.OutgoingPSHOToUtraFddAbort.Other
Outgoing PSHO To Utra Fdd Abort S 1APUE Context Release Command	VS.OutgoingPSHOToUtraFddAbort.S1APUEContextReleaseCommand
Outgoing PSHO To Utra Fdd Failure	VS.OutgoingPSHOToUtraFddFailure
Outgoing PSHO To Utra Fdd Failure Sum	VS.OutgoingPSHOToUtraFddFailureSum
Outgoing PSHO To Utra Fdd Failure HO Preparation Failure	VS.OutgoingPSHOToUtraFddFailure.HOPreparationFailure
Outgoing PSHO To Utra Fdd Failure Radio Link Failure	VS.OutgoingPSHOToUtraFddFailure.RadioLinkFailure
Outgoing PSHO To Utra Fdd Failure RRC Connection Reestablishment On Other Cell	VS.OutgoingPSHOToUtraFddFailure.RRCConnectionReestablishmentOnOtherCell
Outgoing PSHO To Utra Fdd Failure RRC Connection Reestablishment On Source Cell	VS.OutgoingPSHOToUtraFddFailure.RRCConnectionReestablishmentOnSourceCell
Outgoing PSHO To Utra Fdd Failure T S 1 Reloc Overal For PSHO To Utra Timeout	VS.OutgoingPSHOToUtraFddFailure.TS1RelocOveralForPSHOToUtraTimeout
Outgoing PSHO To Utra Fdd Failure T S 1 Reloc Prep For PSHO To Utra Timeout	VS.OutgoingPSHOToUtraFddFailure.TS1RelocPrepForPSHOToUtraTimeout

(2 of 2)

Table A-59 Outgoing PS Handover To UTRAN FDD counters

5620 SAM GUI name	eNodeB 3GPP name
Outgoing PSHO To Utra Fdd Attempt	VS.OutgoingPSHOToUtraFddAttempt
Outgoing PSHO To Utra Fdd Attempt Measurement Via Event B 2 And Threshold 1RSRP Threshold 2 Ec NO	VS.OutgoingPSHOToUtraFddAttempt.MeasurementViaEventB2AndThreshold1RSRPThreshold2EcNO
Outgoing PSHO To Utra Fdd Attempt Measurement Via Event B 2 And Threshold 1RSRP Threshold 2RSCP	VS.OutgoingPSHOToUtraFddAttempt.MeasurementViaEventB2AndThreshold1RSRPThreshold2RSCP
Outgoing PSHO To Utra Fdd Attempt Measurement Via Event B 2 And Threshold 1RSRQ Threshold 2 Ec NO	VS.OutgoingPSHOToUtraFddAttempt.MeasurementViaEventB2AndThreshold1RSRQThreshold2EcNO
Outgoing PSHO To Utra Fdd Attempt Measurement Via Event B 2 And Threshold 1RSRQ Threshold 2RSCP	VS.OutgoingPSHOToUtraFddAttempt.MeasurementViaEventB2AndThreshold1RSRQThreshold2RSCP
Outgoing PSHO To Utra Fdd Preparation Success	VS.OutgoingPSHOToUtraFddPreparationSuccess
Outgoing PSHO To Utra Fdd Preparation Success Measurement Via Event B 2 And Threshold 1RSRP Threshold 2 Ec NO	VS.OutgoingPSHOToUtraFddPreparationSuccess.MeasurementViaEventB2AndThreshold1RSRPThreshold2EcNO
Outgoing PSHO To Utra Fdd Preparation Success Measurement Via Event B 2 And Threshold 1RSRP Threshold 2RSCP	VS.OutgoingPSHOToUtraFddPreparationSuccess.MeasurementViaEventB2AndThreshold1RSRPThreshold2RSCP
Outgoing PSHO To Utra Fdd Preparation Success Measurement Via Event B 2 And Threshold 1RSRQ Threshold 2 Ec NO	VS.OutgoingPSHOToUtraFddPreparationSuccess.MeasurementViaEventB2AndThreshold1RSRQThreshold2EcNO

(1 of 2)

5620 SAM GUI name	eNodeB 3GPP name
Outgoing PSHO To Utra Fdd Preparation Success Measurement Via Event B 2 And Threshold 1RSRQ Threshold 2RSCP	VS.OutgoingPSHOToUtraFddPreparationSuccess.MeasurementViaEventB2AndThreshold1RSRQThreshold2RSCP
Outgoing PSHO To Utra Fdd Success	VS.OutgoingPSHOToUtraFddSuccess
Outgoing PSHO To Utra Fdd Success Measurement Via Event B 2 And Threshold 1RSRP Threshold 2 Ec NO	VS.OutgoingPSHOToUtraFddSuccess.MeasurementViaEventB2AndThreshold1RSRPThreshold2EcNO
Outgoing PSHO To Utra Fdd Success Measurement Via Event B 2 And Threshold 1RSRP Threshold 2RSCP	VS.OutgoingPSHOToUtraFddSuccess.MeasurementViaEventB2AndThreshold1RSRPThreshold2RSCP
Outgoing PSHO To Utra Fdd Success Measurement Via Event B 2 And Threshold 1RSRQ Threshold 2 Ec NO	VS.OutgoingPSHOToUtraFddSuccess.MeasurementViaEventB2AndThreshold1RSRQThreshold2EcNO
Outgoing PSHO To Utra Fdd Success Measurement Via Event B 2 And Threshold 1RSRQ Threshold 2RSCP	VS.OutgoingPSHOToUtraFddSuccess.MeasurementViaEventB2AndThreshold1RSRQThreshold2RSCP

(2 of 2)

Table A-60 Outgoing PS Handover To UTRAN TDD counters

5620 SAM GUI name	eNodeB 3GPP name
Outgoing PSHO To Utra Tdd Attempt	VS.OutgoingPSHOToUtraTddAttempt
Outgoing PSHO To Utra Tdd Attempt PSHO Via Event B 2 And Threshold 1RSRP	VS.OutgoingPSHOToUtraTddAttempt.PSHOViaEventB2AndThreshold1RSRP
Outgoing PSHO To Utra Tdd Attempt PSHO Via Event B 2 And Threshold 1RSRQ	VS.OutgoingPSHOToUtraTddAttempt.PSHOViaEventB2AndThreshold1RSRQ
Outgoing PSHO To Utra Tdd Success	VS.OutgoingPSHOToUtraTddSuccess
Outgoing PSHO To Utra Tdd Success PSHO Via Event B 2 And Threshold 1RSRP	VS.OutgoingPSHOToUtraTddSuccess.PSHOViaEventB2AndThreshold1RSRP
Outgoing PSHO To Utra Tdd Success PSHO Via Event B 2 And Threshold 1RSRQ	VS.OutgoingPSHOToUtraTddSuccess.PSHOViaEventB2AndThreshold1RSRQ

Table A-61 Outgoing PS Handover To UTRAN TDD counters

5620 SAM GUI name	eNodeB 3GPP name
Outgoing PSHO To Utra Tdd Abort	VS.OutgoingPSHOToUtraTddAbort
Outgoing PSHO To Utra Tdd Abort Sum	VS.OutgoingPSHOToUtraTddAbortSum
Outgoing PSHO To Utra Tdd Abort Cascaded Handover	VS.OutgoingPSHOToUtraTddAbort.CascadedHandover
Outgoing PSHO To Utra Tdd Abort Other	VS.OutgoingPSHOToUtraTddAbort.Other
Outgoing PSHO To Utra Tdd Abort S 1APUE Context Release Command	VS.OutgoingPSHOToUtraTddAbort.S1APUEContextReleaseCommand
Outgoing PSHO To Utra Tdd Failure	VS.OutgoingPSHOToUtraTddFailure
Outgoing PSHO To Utra Tdd Failure Sum	VS.OutgoingPSHOToUtraTddFailureSum
Outgoing PSHO To Utra Tdd Failure HO Preparation Failure	VS.OutgoingPSHOToUtraTddFailure.HOPreparationFailure
Outgoing PSHO To Utra Tdd Failure Radio Link Failure	VS.OutgoingPSHOToUtraTddFailure.RadioLinkFailure

(1 of 2)

5620 SAM GUI name	eNodeB 3GPP name
Outgoing PSHO To Utra Tdd Failure RRC Connection Reestablishment On Other Cell	VS.OutgoingPSHOToUtraTddFailure.RRCConnectionReestablishmentOnOtherCell
Outgoing PSHO To Utra Tdd Failure RRC Connection Reestablishment On Source Cell	VS.OutgoingPSHOToUtraTddFailure.RRCConnectionReestablishmentOnSourceCell
Outgoing PSHO To Utra Tdd Failure T S 1 Reloc Overal For PSHO To Utra Timeout	VS.OutgoingPSHOToUtraTddFailure.TS1RelocOveralForPSHOToUtraTimeout
Outgoing PSHO To Utra Tdd Failure T S 1 Reloc Prep For PSHO To Utra Timeout	VS.OutgoingPSHOToUtraTddFailure.TS1RelocPrepForPSHOToUtraTimeout

(2 of 2)

Table A-62 Paging Attempt Stats counters

5620 SAM GUI name	eNodeB 3GPP name
S1 Page Attempts Discarded	VS.S1PageAttemptsDiscarded
S1 Page Attempts - Cell Not Available Internal Failure	VS.S1PageAttemptsDiscarded.CellNotAvailableInternalFailure
S1 Page Attempts Discarded - Intervantion OAM	VS.S1PageAttemptsDiscarded.InterventionOAM
S1 Page Attempts From MMEs	VS.S1PageAttemptsFromMMEs

Table A-63 Power Headroom Stats counters

5620 SAM GUI name	eNodeB 3GPP name
ULP Hnormalized GT Range 1 Le Range 2	VS.ULPHnormalized.GTRange1LeRange2
ULP Hnormalized GT Range 2 Le Range 3	VS.ULPHnormalized.GTRange2LeRange3
ULP Hnormalized GT Range 3 Le Range 4	VS.ULPHnormalized.GTRange3LeRange4
ULP Hnormalized GT Range 4	VS.ULPHnormalized.GTRange4
ULP Hnormalized Le Range 1	VS.ULPHnormalized.LeRange1

Table A-64 PRBs Pool Overload Stats counters

5620 SAM GUI name	eNodeB 3GPP name
DL PRBs Pool Overload Screened	VS.DLPRBsPoolOverloadScreened
DLPR Bs Pool Overload Screened CAC	VS.DLPRBsPoolOverloadScreened.CAC
DLPR Bs Pool Overload Screened Cum	VS.DLPRBsPoolOverloadScreened.Cum
DLPR Bs Pool Overload Screened Max	VS.DLPRBsPoolOverloadScreened.Max
DLPR Bs Pool Overload Screened Min	VS.DLPRBsPoolOverloadScreened.Min
DLPR Bs Pool Overload Screened Modem Report	VS.DLPRBsPoolOverloadScreened.ModemReport
DLPR Bs Pool Overload Screened Nb Evt	VS.DLPRBsPoolOverloadScreened.NbEvt

(1 of 2)

5620 SAM GUI name	eNodeB 3GPP name
UL PRBs Pool Overload Screened	VS.ULPRBsPoolOverloadScreened
ULPR Bs Pool Overload Screened CAC	VS.ULPRBsPoolOverloadScreened.CAC
ULPR Bs Pool Overload Screened Cum	VS.ULPRBsPoolOverloadScreened.Cum
ULPR Bs Pool Overload Screened Max	VS.ULPRBsPoolOverloadScreened.Max
ULPR Bs Pool Overload Screened Min	VS.ULPRBsPoolOverloadScreened.Min
ULPR Bs Pool Overload Screened Modem Report	VS.ULPRBsPoolOverloadScreened.ModemReport
ULPR Bs Pool Overload Screened Nb Evt	VS.ULPRBsPoolOverloadScreened.NbEvt

(2 of 2)

Table A-65 PS Handover to UTRAN FDD Stats counters

5620 SAM GUI name	eNodeB 3GPP name
Outgoing Blind PSHO To Utra Fdd Abort	VS.OutgoingBlindPSHOToUtraFddAbort
Outgoing Blind PSHO To Utra Fdd Abort Sum	VS.OutgoingBlindPSHOToUtraFddAbortSum
Outgoing Blind PSHO To Utra Fdd Abort Cascaded Handover	VS.OutgoingBlindPSHOToUtraFddAbort.CascadedHandover
Outgoing Blind PSHO To Utra Fdd Abort Other	VS.OutgoingBlindPSHOToUtraFddAbort.Other
Outgoing Blind PSHO To Utra Fdd Abort S 1APUE Context Release Command	VS.OutgoingBlindPSHOToUtraFddAbort.S1APUEContextReleaseCommand
Outgoing Blind PSHO To Utra Fdd Attempt	VS.OutgoingBlindPSHOToUtraFddAttempt
Outgoing Blind PSHO To Utra Fdd Attempt Blind Via Event A 2 And Threshold 1RSRP	VS.OutgoingBlindPSHOToUtraFddAttempt.BlindViaEventA2AndThreshold1RSRP
Outgoing Blind PSHO To Utra Fdd Attempt Blind Via Event A 2 And Threshold 1RSRQ	VS.OutgoingBlindPSHOToUtraFddAttempt.BlindViaEventA2AndThreshold1RSRQ
Outgoing Blind PSHO To Utra Fdd Failure	VS.OutgoingBlindPSHOToUtraFddFailure
Outgoing Blind PSHO To Utra Fdd Failure Sum	VS.OutgoingBlindPSHOToUtraFddFailureSum
Outgoing Blind PSHO To Utra Fdd Failure HO Preparation Failure	VS.OutgoingBlindPSHOToUtraFddFailure.HOPreparationFailure
Outgoing Blind PSHO To Utra Fdd Failure Radio Link Failure	VS.OutgoingBlindPSHOToUtraFddFailure.RadioLinkFailure
Outgoing Blind PSHO To Utra Fdd Failure RRC Connection Reestablishment On Other Cell	VS.OutgoingBlindPSHOToUtraFddFailure.RRCConnectionReestablishmentOnOtherCell
Outgoing Blind PSHO To Utra Fdd Failure RRC Connection Reestablishment On Source Cell	VS.OutgoingBlindPSHOToUtraFddFailure.RRCConnectionReestablishmentOnSourceCell
Outgoing Blind PSHO To Utra Fdd Failure T S 1 Reloc Overal For PSHO To Utra Timeout	VS.OutgoingBlindPSHOToUtraFddFailure.TS1RelocOveralForPSHOToUtraTimeout
Outgoing Blind PSHO To Utra Fdd Failure T S 1 Reloc Prep For PSHO To Utra Timeout	VS.OutgoingBlindPSHOToUtraFddFailure.TS1RelocPrepForPSHOToUtraTimeout
Outgoing Blind PSHO To Utra Fdd Success	VS.OutgoingBlindPSHOToUtraFddSuccess
Outgoing Blind PSHO To Utra Fdd Success Blind Via Event A 2 And Threshold 1RSRP	VS.OutgoingBlindPSHOToUtraFddSuccess.BlindViaEventA2AndThreshold1RSRP

(1 of 2)

5620 SAM GUI name	eNodeB 3GPP name
Outgoing Blind PSHO To Utra Fdd Success Blind Via Event A 2 And Threshold 1RSRQ	VS.OutgoingBlindPSHOToUtraFddSuccess.BlindViaEventA2AndThreshold1RSRQ

(2 of 2)

Table A-66 PS Handover to UTRAN TDD Stats counters

5620 SAM GUI name	eNodeB 3GPP name
Outgoing Blind PSHO To Utra Tdd Abort	VS.OutgoingBlindPSHOToUtraTddAbort
Outgoing Blind PSHO To Utra Tdd Abort Sum	VS.OutgoingBlindPSHOToUtraTddAbortSum
Outgoing Blind PSHO To Utra Tdd Abort Cascaded Handover	VS.OutgoingBlindPSHOToUtraTddAbort.CascadedHandover
Outgoing Blind PSHO To Utra Tdd Abort Other	VS.OutgoingBlindPSHOToUtraTddAbort.Other
Outgoing Blind PSHO To Utra Tdd Abort S 1APUE Context Release Command	VS.OutgoingBlindPSHOToUtraTddAbort.S1APUEContextReleaseCommand
Outgoing Blind PSHO To Utra Tdd Attempt	VS.OutgoingBlindPSHOToUtraTddAttempt
Outgoing Blind PSHO To Utra Tdd Attempt Blind Via Event A 2 And Threshold 1RSRP	VS.OutgoingBlindPSHOToUtraTddAttempt.BlindViaEventA2AndThreshold1RSRP
Outgoing Blind PSHO To Utra Tdd Attempt Blind Via Event A 2 And Threshold 1RSRQ	VS.OutgoingBlindPSHOToUtraTddAttempt.BlindViaEventA2AndThreshold1RSRQ
Outgoing Blind PSHO To Utra Tdd Failure	VS.OutgoingBlindPSHOToUtraTddFailure
Outgoing Blind PSHO To Utra Tdd Failure Sum	VS.OutgoingBlindPSHOToUtraTddFailureSum
Outgoing Blind PSHO To Utra Tdd Failure HO Preparation Failure	VS.OutgoingBlindPSHOToUtraTddFailure.HOPreparationFailure
Outgoing Blind PSHO To Utra Tdd Failure Radio Link Failure	VS.OutgoingBlindPSHOToUtraTddFailure.RadioLinkFailure
Outgoing Blind PSHO To Utra Tdd Failure RRC Connection Reestablishment On Other Cell	VS.OutgoingBlindPSHOToUtraTddFailure.RRCConnectionReestablishmentOnOtherCell
Outgoing Blind PSHO To Utra Tdd Failure RRC Connection Reestablishment On Source Cell	VS.OutgoingBlindPSHOToUtraTddFailure.RRCConnectionReestablishmentOnSourceCell
Outgoing Blind PSHO To Utra Tdd Failure T S 1 Reloc Overal For PSHO To Utra Timeout	VS.OutgoingBlindPSHOToUtraTddFailure.TS1RelocOveralForPSHOToUtraTimeout
Outgoing Blind PSHO To Utra Tdd Failure T S 1 Reloc Prep For PSHO To Utra Timeout	VS.OutgoingBlindPSHOToUtraTddFailure.TS1RelocPrepForPSHOToUtraTimeout
Outgoing Blind PSHO To Utra Tdd Success	VS.OutgoingBlindPSHOToUtraTddSuccess
Outgoing Blind PSHO To Utra Tdd Success Blind Via Event A 2 And Threshold 1RSRP	VS.OutgoingBlindPSHOToUtraTddSuccess.BlindViaEventA2AndThreshold1RSRP
Outgoing Blind PSHO To Utra Tdd Success Blind Via Event A 2 And Threshold 1RSRQ	VS.OutgoingBlindPSHOToUtraTddSuccess.BlindViaEventA2AndThreshold1RSRQ

Table A-67 RACH counters

5620 SAM GUI name	eNodeB 3GPP name
Contention Based Random Access Preamble	VS.ContentionBasedRandomAccessPreamble
Contention Based Random Access Response	VS.ContentionBasedRandomAccessResponse
Contention Free Random Access Preamble	VS.ContentionFreeRandomAccessPreamble
Contention Free Random Access Response	VS.ContentionFreeRandomAccessResponse
Contention Resolution	VS.ContentionResolution

Table A-68 Radio Link Stats counters

5620 SAM GUI name	eNodeB 3GPP name
Radio Link Failure	VS.RadioLinkFailure
Sum Of Radio Link Failure	VS.RadioLinkFailureSum
Number of UL L1 Synchronization Loss	VS.RadioLinkFailure.LossOfUlL1Synchro
Maximum Number Of DL RLC Retransmissions Reached	VS.RadioLinkFailure.MaxNbRlcRetransReached

Table A-69 Redirection to GERAN Stats counters

5620 SAM GUI name	eNodeB 3GPP name
Redirection To Geran Blind Via Event A 2 And Threshold 1RSRP	VS.RedirectionToGeran.BlindViaEventA2AndThreshold1RSRP
Redirection To Geran Blind Via Event A 2 And Threshold 1RSRQ	VS.RedirectionToGeran.BlindViaEventA2AndThreshold1RSRQ
Redirection To Geran Cs Fallback Triggered	VS.RedirectionToGeran.CsFallbackTriggered
Redirection To Geran Measurement Via Event B 2 And Threshold 1RSRP Threshold 2GERAN	VS.RedirectionToGeran.MeasurementViaEventB2AndThreshold1RSRPThreshold2GERAN
Redirection To Geran Measurement Via Event B 2 And Threshold 1RSRQ Threshold 2GERAN	VS.RedirectionToGeran.MeasurementViaEventB2AndThreshold1RSRQThreshold2GERAN

Table A-70 Redirection To HRPD Stats counters

5620 SAM GUI name	eNodeB 3GPP name
Non Optimized Redirection To HRPD Via Event A 2	VS.NonOptimizedRedirectionToHRPDViaEventA2

Table A-71 Redirection To Inter-Frequency Intra-FDD or TDD Stats counters

5620 SAM GUI name	eNodeB 3GPP name
Redirection To Inter Frequency Intra FD Dor TDD	VS.RedirectionToInterFrequencyIntraFDDorTDD
Redirection To Inter Frequency Intra FD Dor TDD Blind Via Event A 2 And Threshold 1RSRP	VS.RedirectionToInterFrequencyIntraFDDorTDD.BlindViaEvent A2AndThreshold1RSRP
Redirection To Inter Frequency Intra FD Dor TDD Blind Via Event A 2 And Threshold 1RSRQ	VS.RedirectionToInterFrequencyIntraFDDorTDD.BlindViaEvent A2AndThreshold1RSRQ

Table A-72 Redirection To Inter-Frequency Same Frame Structure Stats counters

5620 SAM GUI name	eNodeB 3GPP name
Redirection To Inter Frequency Same Frame Structure Blind Via Event A 2 And Threshold 1RSRP	VS.RedirectionToInterFrequencySameFrameStructure.BlindVi aEventA2AndThreshold1RSRP
Redirection To Inter Frequency Same Frame Structure Blind Via Event A 2 And Threshold 1RSRQ	VS.RedirectionToInterFrequencySameFrameStructure.BlindVi aEventA2AndThreshold1RSRQ
Redirection To Inter Frequency Same Frame Structure Event A 3 Or A 5	VS.RedirectionToInterFrequencySameFrameStructure.EventA 3OrA5

Table A-73 Redirection to UTRAN FDD Stats counters

5620 SAM GUI name	eNodeB 3GPP name
Redirection To Utra Fdd Blind Via Event A 2 And Threshold 1RSRP	VS.RedirectionToUtraFdd.BlindViaEventA2AndThreshold1RSR P
Redirection To Utra Fdd Blind Via Event A 2 And Threshold 1RSRQ	VS.RedirectionToUtraFdd.BlindViaEventA2AndThreshold1RSR Q
Redirection To Utra Fdd Cs Fallback Triggered	VS.RedirectionToUtraFdd.CsFallbackTriggered
Redirection To Utra Fdd Measurement Via Event B 2 And Threshold 1RSRP Threshold 2 Ec NO	VS.RedirectionToUtraFdd.MeasurementViaEventB2AndThresh old1RSRPThreshold2EcNO
Redirection To Utra Fdd Measurement Via Event B 2 And Threshold 1RSRP Threshold 2RSCP	VS.RedirectionToUtraFdd.MeasurementViaEventB2AndThresh old1RSRPThreshold2RSCP
Redirection To Utra Fdd Measurement Via Event B 2 And Threshold 1RSRQ Threshold 2 Ec NO	VS.RedirectionToUtraFdd.MeasurementViaEventB2AndThresh old1RSRQThreshold2EcNO
Redirection To Utra Fdd Measurement Via Event B 2 And Threshold 1RSRQ Threshold 2RSCP	VS.RedirectionToUtraFdd.MeasurementViaEventB2AndThresh old1RSRQThreshold2RSCP

Table A-74 Redirection to UTRAN TDD Stats counters

5620 SAM GUI name	eNodeB 3GPP name
Redirection To Utra Tdd Blind Via Event A 2 And Threshold 1RSRP	VS.RedirectionToUtraTdd.BlindViaEventA2AndThreshold1RSR P

(1 of 2)

5620 SAM GUI name	eNodeB 3GPP name
Redirection To Utra Tdd Blind Via Event A 2 And Threshold 1RSRQ	VS.RedirectionToUtraTdd.BlindViaEventA2AndThreshold1RSRQ
Redirection To Utra Tdd Measurement Via Event B 2 And Threshold 1RSRP Threshold 2RSCP	VS.RedirectionToUtraTdd.MeasurementViaEventB2AndThreshold1RSRPThreshold2RSCP
Redirection To Utra Tdd Measurement Via Event B 2 And Threshold 1RSRQ Threshold 2RSCP	VS.RedirectionToUtraTdd.MeasurementViaEventB2AndThreshold1RSRQThreshold2RSCP

(2 of 2)

Table A-75 RRC Connection Release Rue To MME Overload counters

5620 SAM GUI name	eNodeB 3GPP name
RRC Connection Release Due To MME Overload	VS.RrcConnectionReleaseDueToMMEOverload
MME Overload MO Data	VS.RrcConnectionReleaseDueToMMEOverload.MoData
MME Overload MO Data MO Signaling	VS.RrcConnectionReleaseDueToMMEOverload.MoDataMoSignalling
Non-Emergency Non-MT Access	VS.RrcConnectionReleaseDueToMMEOverload.NonEmergencyNonMtAccess

Table A-76 RRC Connection Setup Stats counters

5620 SAM GUI name	eNodeB 3GPP name
RRC Connection Failures	VS.RrcConnectionFailure
RRC Connection Failure Sum	VS.RrcConnectionFailureSum
CAC Failure	VS.RrcConnectionFailure.CACFailure
Intervention OAM	VS.RrcConnectionFailure.InterventionOAM
MO Data	VS.RrcConnectionFailure.MoData
MO Data MO Signaling	VS.RrcConnectionFailure.MoDataMoSignalling
Non-Emergency Non-MT Access	VS.RrcConnectionFailure.NonEmergencyNonMtAccess
No Response From UE	VS.RrcConnectionFailure.NoResponseFromUE
S1 Fault External Failure	VS.RrcConnectionFailure.S1FaultExternalFailure
RRC Connection Requests	VS.RrcConnectionRequest
Emergency Call Attempts	VS.RrcConnectionRequest.EmergencyCallAttempts
High Priority Access Attempts	VS.RrcConnectionRequest.HighPriorityAccessAttempts
Mobile Originated Signaling	VS.RrcConnectionRequest.MobileOriginatedSignalling
Mobile Originated User Bearer	VS.RrcConnectionRequest.MobileOriginatedUserBearer
Other RRC Connection Request	VS.RrcConnectionRequest.Other
Page Responses Received	VS.RrcConnectionRequest.PageResponsesReceived
RRC Connection Success Sum	VS.RrcConnectionSuccessSum

Table A-77 RRC Connection Stats counters

5620 SAM GUI name	eNodeB 3GPP name
Total Number Of RRC Connected	VS.NbUeRrcConnected
Cumulative Number Of RRC Connected	VS.NbUeRrcConnected.Cum
Maximum Number Of RRC Connected	VS.NbUeRrcConnected.Max
Minimum Number Of RRC Connected	VS.NbUeRrcConnected.Min
Number Of Events Of RRC Connected	VS.NbUeRrcConnected.NbEvt

Table A-78 RRC Reestablishment Setup Stats counters

5620 SAM GUI name	eNodeB 3GPP name
RRC Reestablishment Failure	VS.RrcConnectionReestablishmentFailure
Sum Of RRC Reestablishment Failure	VS.RrcConnectionReestablishmentFailureSum
CAC Failure	VS.RrcConnectionReestablishmentFailure.CACFailure
Integrity Failure	VS.RrcConnectionReestablishmentFailure.IntegrityFailure
Intervention OAM	VS.RrcConnectionReestablishmentFailure.InterventionOAM
New RRC Connection Reestablishment Requests	VS.RrcConnectionReestablishmentFailure.NewRrcConnection ReestabRequest
Radio Link Failure	VS.RrcConnectionReestablishmentFailure.RadioLinkFailure
Reestablishment Not Allowed	VS.RrcConnectionReestablishmentFailure.ReestablishmentNo tAllowed
Reestablishment Of UE Id Unknown	VS.RrcConnectionReestablishmentFailure.ReestabUEIdUnkno wn
RRC Reconfig Timeouts	VS.RrcConnectionReestablishmentFailure.RrcConnectionReco nfigTimeout
RRC Reestablishment Timeouts	VS.RrcConnectionReestablishmentFailure.RrcConnectionRees tabTimeout
S1 Fault External Failure	VS.RrcConnectionReestablishmentFailure.S1FaultExternalFail ure
Short MACI Mismatch	VS.RrcConnectionReestablishmentFailure.ShortMACIMismatch
RRC Connection Reestablishment Request	VS.RrcConnectionReestablishmentRequest
RRC Connection Reestablishment Success	VS.RrcConnectionReestablishmentSuccess
RRC Reestablishment Success On Not Service Cell During HO	VS.RrcConnectionReestablishmentSuccess.OnNotServingCellN otDuringHO
RRC Reestablishment Success On Other Cell During HO	VS.RrcConnectionReestablishmentSuccess.OnOtherCellDuring HO
Rrc Connection Reestablishment Success On Target Cell During Incoming PSHO	VS.RrcConnectionReestablishmentSuccess.OnTargetCellDurin gIncomingPSHO
Success On Target Cell During Intra eNodeB Inter Freq Same Frame Structure S1 HO	VS.RrcConnectionReestablishmentSuccess.OnTargetCellDurin gInterENodeBInterFreqSameFrameStructureS1HO
Success On Target Cell During Intra eNodeB Inter Freq Same Frame Structure X2 HO	VS.RrcConnectionReestablishmentSuccess.OnTargetCellDurin gInterENodeBInterFreqSameFrameStructureX2HO

(1 of 2)

5620 SAM GUI name	eNodeB 3GPP name
On Target Cell During Inter eNodeB S1 HO	VS.RrcConnectionReestablishmentSuccess.OnTargetCellDuringInterENodeBS1HO
On Target Cell During Inter eNodeB X2 HO	VS.RrcConnectionReestablishmentSuccess.OnTargetCellDuringInterENodeBX2HO
On Target Cell During Intra eNodeB HO	VS.RrcConnectionReestablishmentSuccess.OnTargetCellDuringIntraENodeBHO
Success On Target Cell During Intra eNodeB Inter Freq Same Frame Structure HO	VS.RrcConnectionReestablishmentSuccess.OnTargetCellDuringIntraENodeBInterFreqSameFrameStructureHO
Other RRC Reestablishment Success	VS.RrcConnectionReestablishmentSuccess.Other

(2 of 2)

Table A-79 S1 Error Indication By eNodeB Stats counters

5620 SAM GUI name	eNodeB 3GPP name
S 1 Error Indication By eNodeB	VS.S1ErrorIndicationByENodeB
S 1 Error Indication By eNodeB Other	VS.S1ErrorIndicationByENodeB.Other
S 1 Error Indication By eNodeB Protocol Error	VS.S1ErrorIndicationByENodeB.ProtocolError
S 1 Error Indication By eNodeB Unknown Or Already AllocatedeNodeB UE S 1ap Id	VS.S1ErrorIndicationByENodeB.UnknownOrAlreadyAllocatedeNodeBUES1apId
S 1 Error Indication By eNodeB Unknown Or Already Allocated MMEUE S 1ap Id	VS.S1ErrorIndicationByENodeB.UnknownOrAlreadyAllocatedMMEUES1apId
S 1 Error Indication By eNodeB Unknown Or Already Allocated Pair Of UE S 1ap Id	VS.S1ErrorIndicationByENodeB.UnknownOrAlreadyAllocatedPairOfUES1apId

Table A-80 S1 Error Indication By MME Stats counters

5620 SAM GUI name	eNodeB 3GPP name
S 1 Error Indication By MME	VS.S1ErrorIndicationByMME
S 1 Error Indication By MME Other	VS.S1ErrorIndicationByMME.Other
S 1 Error Indication By MME Protocol Error	VS.S1ErrorIndicationByMME.ProtocolError
S 1 Error Indication By MME Unknown Or Already AllocatedeNodeB UE S 1ap Id	VS.S1ErrorIndicationByMME.UnknownOrAlreadyAllocatedeNodeBUES1apId
S 1 Error Indication By MME Unknown Or Already Allocated MMEUE S 1ap Id	VS.S1ErrorIndicationByMME.UnknownOrAlreadyAllocatedMMEUES1apId
S 1 Error Indication By MME Unknown Or Already Allocated Pair Of UE S 1ap Id	VS.S1ErrorIndicationByMME.UnknownOrAlreadyAllocatedPairOfUES1apId

Table A-81 S1 SCTP Traffic Stats counters

5620 SAM GUI name	eNodeB 3GPP name
S 1 Sctp In Octets	VS.S1SctpInOctets
S 1 Sctp In Packets	VS.S1SctpInPackets
S 1 Sctp Out Octets	VS.S1SctpOutOctets
S 1 Sctp Out Packets	VS.S1SctpOutPackets

Table A-82 S1 Setup Stats counters

5620 SAM GUI name	eNodeB 3GPP name
First DL Nas Transport	VS.FirstDLNasTransport
Initial UE Messages	VS.InitialUEMessage
S1 Connection Establishment Failure	VS.S1ConnectionEstablishmentFailure
S1 Connection Establishment Timeout	VS.S1ConnectionEstablishmentFailure.Timeout
UE Context Setup Request	VS.UEContextSetupRequest
After DLNAS Transport	VS.UEContextSetupRequest.AfterDLNASTransport
Request Without Previous DLNAS Transport	VS.UEContextSetupRequest.WithoutPreviousDLNASTransport

Table A-83 SCTP Association Stats counters

5620 SAM GUI name	eNodeB 3GPP name
Sctp Association Establishment	VS.SctpAssociationEstablishment
Sctp Association Failure	VS.SctpAssociationFailure

Table A-84 Throughput On S1 interfaces Stats counters

5620 SAM GUI name	eNodeB 3GPP name
S 1DL Throughput	VS.S1DLThroughput
S 1DL Throughput Cum	VS.S1DLThroughput.Cum
S 1DL Throughput Max	VS.S1DLThroughput.Max
S 1DL Throughput Min	VS.S1DLThroughput.Min
S 1DL Throughput Nb Evt	VS.S1DLThroughput.NbEvt
S 1UL Throughput	VS.S1ULThroughput
S 1UL Throughput Cum	VS.S1ULThroughput.Cum
S 1UL Throughput Max	VS.S1ULThroughput.Max

(1 of 2)

5620 SAM GUI name	eNodeB 3GPP name
S 1UL Throughput Min	VS.S1ULThroughput.Min
S 1UL Throughput Nb Evt	VS.S1ULThroughput.NbEvt

(2 of 2)

Table A-85 Throughput On X2 interfaces Stats counters

5620 SAM GUI name	eNodeB 3GPP name
X2 Received Throughput CUM	VS.X2ReceivedThroughput.Cum
X2 Received Throughput Max	VS.X2ReceivedThroughput.Max
X2 Received Throughput Min	VS.X2ReceivedThroughput.Min
X2 Received Throughput NbEvt	VS.X2ReceivedThroughput.NbEvt
X2 Sent Throughput CUM	VS.X2SentThroughput.Cum
X2 Sent Throughput Max	VS.X2SentThroughput.Max
X2 Sent Throughput Min	VS.X2SentThroughput.Min
X2 Sent Throughput NbEvt	VS.X2SentThroughput.NbEvt

Table A-86 Traffic On S1 interfaces Stats counters

5620 SAM GUI name	eNodeB 3GPP name
S 1DL Packets	VS.S1DLPackets
S 1DL Packets Per Second	VS.S1DLPacketsPerSecond
S 1UL Packets	VS.S1ULPackets
S 1UL Packets Per Second	VS.S1ULPacketsPerSecond

Table A-87 Traffic On X2 interfaces Stats counters

5620 SAM GUI name	eNodeB 3GPP name
X 2 Received Packets	VS.X2ReceivedPackets
X 2 Received Packets Per Second	VS.X2ReceivedPacketsPerSecond
X 2 Sent Packets	VS.X2SentPackets
X 2 Sent Packets Per Second	VS.X2SentPacketsPerSecond

Table A-88 Transport Block Stats counters

5620 SAM GUI name	eNodeB 3GPP name
Total Count Of DL Transport Blocks	VS.TotalCountOfDLTransportBlocks
Total Count Of Error DL Transport Blocks	VS.TotalCountOfErrorDLTransportBlocks
Total Count Of Error UL Transport Blocks	VS.TotalCountOfErrorULTransportBlocks
Total Count Of UL Transport Blocks	VS.TotalCountOfULTransportBlocks

Table A-89 UE Context Modification Stats counters

5620 SAM GUI name	eNodeB 3GPP name
UE Context Modification Attempt	VS.UEContextmodificationAttempt
UE Context Modification Failure	VS.UEContextModificationFailure
Abstract Syntax Error	VS.UEContextModificationFailure.AbstractSyntaxError
Encryption And/Or Iintegrity Protection Algorithms Not Supported	VS.UEContextModificationFailure.EncryptionAndOrIintegrityProtectionAlgorithmsNotSupported
Failure In The Radio Interface Procedure	VS.UEContextModificationFailure.FailureInTheRadioInterface Procedure
S1 Inter System Handover Triggered	VS.UEContextModificationFailure.S1InterSystemHandoverTrig gered
S1 Intra System Handover Triggered	VS.UEContextModificationFailure.S1IntraSystemHandoverTrig gered
Unspecified Failure	VS.UEContextModificationFailure.Unspecified
X2 Handover Triggered	VS.UEContextModificationFailure.X2HandoverTriggered
UE Context Modification Success	VS.UEContextmodificationSuccess

Table A-90 UE Context Release Command Stats counters

5620 SAM GUI name	eNodeB 3GPP name
UE Context Release Command Sum	VS.UEContextReleaseCommandSum
UE Context Release Command Authentication Failure	VS.UEContextReleaseCommand.AuthenticationFailure
UE Context Release Command Detach	VS.UEContextReleaseCommand.Detach
UE Context Release Command Normal Release	VS.UEContextReleaseCommand.NormalRelease
UE Context Release Command Response To Release Request	VS.UEContextReleaseCommand.ResponseToReleaseRequest
UE Context Release Command Successful Handover	VS.UEContextReleaseCommand.SuccessfulHandover

Table A-91 UE Context Release Request Stats counters

5620 SAM GUI name	eNodeB 3GPP name
UE Context Release Command Sum	VS.UEContextReleaseCommandSum
Authentication Failure	VS.UEContextReleaseCommand.AuthenticationFailure
UE Context Release Command Detach	VS.UEContextReleaseCommand.Detach
Normal Release	VS.UEContextReleaseCommand.NormalRelease
Response To Release Requests	VS.UEContextReleaseCommand.ResponseToReleaseRequest
UE Context Release Command Successful Handover	VS.UEContextReleaseCommand.SuccessfulHandover
Total UE Context Release Requests	VS.UEContextReleaseRequest
Sum Of UE Context Release Requests	VS.UEContextReleaseRequestSum
UE Context Release Request Cs Fallback Not Possible	VS.UEContextReleaseRequest.CsFallbackNotPossible
Integrity Failures	VS.UEContextReleaseRequest.IntegrityFailure
Inter Freq Redirection	VS.UEContextReleaseRequest.InterFreqRedirection
Internal Failures	VS.UEContextReleaseRequest.InternalFailure
Inter RAT Redirections	VS.UEContextReleaseRequest.InterRATRedirection
No Initial Context Setup Requests	VS.UEContextReleaseRequest.NoInitialContextSetupRequest
Radio Interface Failures	VS.UEContextReleaseRequest.RadioInterfaceFailure
Radio Link Failure	VS.UEContextReleaseRequest.RadioLinkFailure
Security Algorithm Not Compatible Failures	VS.UEContextReleaseRequest.SecurityAlgoNotCompatible
UE Context Release Request T Mobility From Eutra CCO Timeout With NACC	VS.UEContextReleaseRequest.TMobilityFromEutraCCOTimeoutWithNACC
UE Context Release Request T Mobility From Eutra CCO Timeout Without NACC	VS.UEContextReleaseRequest.TMobilityFromEutraCCOTimeoutWithoutNACC
TS1 Reloc Overall For PS HO To UTRAN Timeouts	VS.UEContextReleaseRequest.TS1RelocOveralForPSHOToUtraTimeout
TS1 Relocation Overall For S1 HO Timeout	VS.UEContextReleaseRequest.TS1RelocOverallForS1HOTimeout
User Inactivity	VS.UEContextReleaseRequest.UserInactivity
X2 Release Timeouts	VS.UEContextReleaseRequest.X2ReleaseTimeout

Table A-92 UE Context Setup Stats counters

5620 SAM GUI name	eNodeB 3GPP name
Sum Of Initial Context Setup Failed	VS.InitialContextSetupFailedSum
CAC Failure	VS.InitialContextSetupFailed.CACFailure
CS Fallback Not Possible Failures	VS.InitialContextSetupFailed.CsFallbackNotPossible
E-RAB Context Allocation Failures	VS.InitialContextSetupFailed.ERABContextAllocationFailure
Integrity Failures	VS.InitialContextSetupFailed.IntegrityFailure

(1 of 2)

5620 SAM GUI name	eNodeB 3GPP name
Internal Failures	VS.InitialContextSetupFailed.InternalFailure
RRC Connection Reestablishments	VS.InitialContextSetupFailed.RRCConnectionReestablishment
Security Activation Failures	VS.InitialContextSetupFailed.SecurityActivationFailure
Security Algorithm Not Compatible Failures	VS.InitialContextSetupFailed.SecurityAlgoNotCompatible
Timeouts	VS.InitialContextSetupFailed.Timeout
Initial Context Setup Success	VS.InitialContextSetupSuccess
After DLNAS Transport	VS.InitialContextSetupSuccess.AfterDLNASTransport
Without Previous DLNAS Transport	VS.InitialContextSetupSuccess.WithoutPreviousDLNASTransport

(2 of 2)

Table A-93 UE scheduled per TTI Stats counters

5620 SAM GUI name	eNodeB 3GPP name
Nb Ue Scheduled Per DLTTI	VS.NbUeScheduledPerDLTTI
Nb Ue Scheduled Per DLTTI Cum	VS.NbUeScheduledPerDLTTI.Cum
Nb Ue Scheduled Per DLTTI Max	VS.NbUeScheduledPerDLTTI.Max
Nb Ue Scheduled Per DLTTI Min	VS.NbUeScheduledPerDLTTI.Min
Nb Ue Scheduled Per DLTTI Nb Evt	VS.NbUeScheduledPerDLTTI.NbEvt
Nb Ue Scheduled Per ULTTI	VS.NbUeScheduledPerULTTI

Table A-94 UL PRB Usage Stats counters

5620 SAM GUI name	eNodeB 3GPP name
Usage Per Traffic Class	VS.ULPRBUsagePerTrafficClass
Usage Per Traffic Class - GBR	VS.ULPRBUsagePerTrafficClass.GBR
Usage Per Traffic Class - NonGBR	VS.ULPRBUsagePerTrafficClass.NonGBR
Usage Per Traffic Class - VoIP	VS.ULPRBUsagePerTrafficClass.VoIP
UL Total PRB Usage	VS.ULTotalPRBUsage

Table A-95 Uplink Cell PDCP SDU Volume Stats counters

5620 SAM GUI name	eNodeB 3GPP name
DRB Pdcp Sdu Bit Rate UL	VS.DRBPdcpSduBitRateUL
DRB Pdcp Sdu Kbytes UL	VS.DRBPdcpSduKbytesUL
DRB Pdcp Sdu Kbytes UL Non GBR	VS.DRBPdcpSduKbytesUL.NonGBR

(1 of 2)

5620 SAM GUI name	eNodeB 3GPP name
DRB Pdcp Sdu Kbytes UL Other GBR	VS.DRBPdcpSduKbytesUL.OtherGBR
DRB Pdcp Sdu Kbytes UL Vo IP	VS.DRBPdcpSduKbytesUL.VoIP

(2 of 2)

Table A-96 Uplink Grants per TTI Stats counters

5620 SAM GUI name	eNodeB 3GPP name
UL Grant 0 Grant	VS.ULGrant.0Grant
UL Grant 1 Grant	VS.ULGrant.1Grant
UL Grant 2 Grants	VS.ULGrant.2Grants
UL Grant 3 Grants	VS.ULGrant.3Grants
UL Grant 4 Grants	VS.ULGrant.4Grants
UL Grant 5 Grants	VS.ULGrant.5Grants
UL Grant 6or More Grants	VS.ULGrant.6orMoreGrants

Table A-97 Uplink L2 Traffic and Throughput Stats counters

5620 SAM GUI name	eNodeB 3GPP name
UL Rlc Pdu Kbytes GBR	VS.ULRlcPduKbytes.GBR
UL Rlc Pdu Kbytes Non GBR	VS.ULRlcPduKbytes.NonGBR
UL Rlc Pdu Kbytes Vo IP	VS.ULRlcPduKbytes.VoIP
UL Rlc Pdu Received GBR	VS.ULRlcPduReceived.GBR
UL Rlc Pdu Received Non GBR	VS.ULRlcPduReceived.NonGBR
UL Rlc Pdu Received Vo IP	VS.ULRlcPduReceived.VoIP

Table A-98 Uplink Noise For PRB100 counters

5620 SAM GUI name	eNodeB 3GPP name
Greater Than Range1 Lower Or Equal To Range2	VS.ULNoise.GtRg1LeRg2PRB100
Greater Than Range2 Lower Or Equal To Range3	VS.ULNoise.GtRg2LeRg3PRB100
Greater Than Range3 Lower Or Equal To Range4	VS.ULNoise.GtRg3LeRg4PRB100
Greater Than Range4	VS.ULNoise.GtRg4PRB100
Lower Or Equal To Range1	VS.ULNoise.LeRg1PRB100

Table A-99 Uplink Noise For PRB10 counters

5620 SAM GUI name	eNodeB 3GPP name
Greater Than Range1 Lower Or Equal To Range2	VS.ULNoise.GtRg1LeRg2PRB10
Greater Than Range2 Lower Or Equal To Range3	VS.ULNoise.GtRg2LeRg3PRB10
Greater Than Range3 Lower Or Equal To Range4	VS.ULNoise.GtRg3LeRg4PRB10
Greater Than Range4	VS.ULNoise.GtRg4PRB10
Lower Or Equal To Range1	VS.ULNoise.LeRg1PRB10

Table A-100 Uplink Noise For PRB10 counters

5620 SAM GUI name	eNodeB 3GPP name
UL Noise Per PRB Group Gt Rg 1 Le Rg 2PR Bg 10	VS.ULNoisePerPRBGroup.GtRg1LeRg2PRBg10
UL Noise Per PRB Group Gt Rg 2 Le Rg 3PR Bg 10	VS.ULNoisePerPRBGroup.GtRg2LeRg3PRBg10
UL Noise Per PRB Group Gt Rg 3 Le Rg 4PR Bg 10	VS.ULNoisePerPRBGroup.GtRg3LeRg4PRBg10
UL Noise Per PRB Group Gt Rg 4PR Bg 10	VS.ULNoisePerPRBGroup.GtRg4PRBg10
UL Noise Per PRB Group Le Rg 1PR Bg 10	VS.ULNoisePerPRBGroup.LeRg1PRBg10

Table A-101 Uplink Noise For PRB11 counters

5620 SAM GUI name	eNodeB 3GPP name
Greater Than Range1 Lower Or Equal To Range2	VS.ULNoise.GtRg1LeRg2PRB11
Greater Than Range2 Lower Or Equal To Range3	VS.ULNoise.GtRg2LeRg3PRB11
Greater Than Range3 Lower Or Equal To Range4	VS.ULNoise.GtRg3LeRg4PRB11
Greater Than Range4	VS.ULNoise.GtRg4PRB11
Lower Or Equal To Range1	VS.ULNoise.LeRg1PRB11

Table A-102 Uplink Noise For PRB11 counters

5620 SAM GUI name	eNodeB 3GPP name
UL Noise Per PRB Group Gt Rg 1 Le Rg 2PR Bg 11	VS.ULNoisePerPRBGroup.GtRg1LeRg2PRBg11
UL Noise Per PRB Group Gt Rg 2 Le Rg 3PR Bg 11	VS.ULNoisePerPRBGroup.GtRg2LeRg3PRBg11
UL Noise Per PRB Group Gt Rg 3 Le Rg 4PR Bg 11	VS.ULNoisePerPRBGroup.GtRg3LeRg4PRBg11
UL Noise Per PRB Group Gt Rg 4PR Bg 11	VS.ULNoisePerPRBGroup.GtRg4PRBg11
UL Noise Per PRB Group Le Rg 1PR Bg 11	VS.ULNoisePerPRBGroup.LeRg1PRBg11

Table A-103 Uplink Noise For PRB12 counters

5620 SAM GUI name	eNodeB 3GPP name
Greater Than Range1 Lower Or Equal To Range2	VS.ULNoise.GtRg1LeRg2PRB12
Greater Than Range2 Lower Or Equal To Range3	VS.ULNoise.GtRg2LeRg3PRB12
Greater Than Range3 Lower Or Equal To Range4	VS.ULNoise.GtRg3LeRg4PRB12
Greater Than Range4	VS.ULNoise.GtRg4PRB12
Lower Or Equal To Range1	VS.ULNoise.LeRg1PRB12

Table A-104 Uplink Noise For PRB12 counters

5620 SAM GUI name	eNodeB 3GPP name
UL Noise Per PRB Group Gt Rg 1 Le Rg 2PR Bg 12	VS.ULNoisePerPRBGroup.GtRg1LeRg2PRBg12
UL Noise Per PRB Group Gt Rg 2 Le Rg 3PR Bg 12	VS.ULNoisePerPRBGroup.GtRg2LeRg3PRBg12
UL Noise Per PRB Group Gt Rg 3 Le Rg 4PR Bg 12	VS.ULNoisePerPRBGroup.GtRg3LeRg4PRBg12
UL Noise Per PRB Group Gt Rg 4PR Bg 12	VS.ULNoisePerPRBGroup.GtRg4PRBg12
UL Noise Per PRB Group Le Rg 1PR Bg 12	VS.ULNoisePerPRBGroup.LeRg1PRBg12

Table A-105 Uplink Noise For PRB13 counters

5620 SAM GUI name	eNodeB 3GPP name
Greater Than Range1 Lower Or Equal To Range2	VS.ULNoise.GtRg1LeRg2PRB13
Greater Than Range2 Lower Or Equal To Range3	VS.ULNoise.GtRg2LeRg3PRB13
Greater Than Range3 Lower Or Equal To Range4	VS.ULNoise.GtRg3LeRg4PRB13
Greater Than Range4	VS.ULNoise.GtRg4PRB13
Lower Or Equal To Range1	VS.ULNoise.LeRg1PRB13

Table A-106 Uplink Noise For PRB13 counters

5620 SAM GUI name	eNodeB 3GPP name
UL Noise Per PRB Group Gt Rg 1 Le Rg 2PR Bg 13	VS.ULNoisePerPRBGroup.GtRg1LeRg2PRBg13
UL Noise Per PRB Group Gt Rg 2 Le Rg 3PR Bg 13	VS.ULNoisePerPRBGroup.GtRg2LeRg3PRBg13
UL Noise Per PRB Group Gt Rg 3 Le Rg 4PR Bg 13	VS.ULNoisePerPRBGroup.GtRg3LeRg4PRBg13
UL Noise Per PRB Group Gt Rg 4PR Bg 13	VS.ULNoisePerPRBGroup.GtRg4PRBg13
UL Noise Per PRB Group Le Rg 1PR Bg 13	VS.ULNoisePerPRBGroup.LeRg1PRBg13

Table A-107 Uplink Noise For PRB14 counters

5620 SAM GUI name	eNodeB 3GPP name
Greater Than Range1 Lower Or Equal To Range2	VS.ULNoise.GtRg1LeRg2PRB14
Greater Than Range2 Lower Or Equal To Range3	VS.ULNoise.GtRg2LeRg3PRB14
Greater Than Range3 Lower Or Equal To Range4	VS.ULNoise.GtRg3LeRg4PRB14
Greater Than Range4	VS.ULNoise.GtRg4PRB14
Lower Or Equal To Range1	VS.ULNoise.LeRg1PRB14

Table A-108 Uplink Noise For PRB14 counters

5620 SAM GUI name	eNodeB 3GPP name
UL Noise Per PRB Group Gt Rg 1 Le Rg 2PR Bg 14	VS.ULNoisePerPRBGroup.GtRg1LeRg2PRBg14
UL Noise Per PRB Group Gt Rg 2 Le Rg 3PR Bg 14	VS.ULNoisePerPRBGroup.GtRg2LeRg3PRBg14
UL Noise Per PRB Group Gt Rg 3 Le Rg 4PR Bg 14	VS.ULNoisePerPRBGroup.GtRg3LeRg4PRBg14
UL Noise Per PRB Group Gt Rg 4PR Bg 14	VS.ULNoisePerPRBGroup.GtRg4PRBg14
UL Noise Per PRB Group Le Rg 1PR Bg 14	VS.ULNoisePerPRBGroup.LeRg1PRBg14

Table A-109 Uplink Noise For PRB15 counters

5620 SAM GUI name	eNodeB 3GPP name
Greater Than Range1 Lower Or Equal To Range2	VS.ULNoise.GtRg1LeRg2PRB15
Greater Than Range2 Lower Or Equal To Range3	VS.ULNoise.GtRg2LeRg3PRB15
Greater Than Range3 Lower Or Equal To Range4	VS.ULNoise.GtRg3LeRg4PRB15
Greater Than Range4	VS.ULNoise.GtRg4PRB15
Lower Or Equal To Range1	VS.ULNoise.LeRg1PRB15

Table A-110 Uplink Noise For PRB15 counters

5620 SAM GUI name	eNodeB 3GPP name
UL Noise Per PRB Group Gt Rg 1 Le Rg 2PR Bg 15	VS.ULNoisePerPRBGroup.GtRg1LeRg2PRBg15
UL Noise Per PRB Group Gt Rg 2 Le Rg 3PR Bg 15	VS.ULNoisePerPRBGroup.GtRg2LeRg3PRBg15
UL Noise Per PRB Group Gt Rg 3 Le Rg 4PR Bg 15	VS.ULNoisePerPRBGroup.GtRg3LeRg4PRBg15
UL Noise Per PRB Group Gt Rg 4PR Bg 15	VS.ULNoisePerPRBGroup.GtRg4PRBg15
UL Noise Per PRB Group Le Rg 1PR Bg 15	VS.ULNoisePerPRBGroup.LeRg1PRBg15

Table A-111 Uplink Noise For PRB16 counters

5620 SAM GUI name	eNodeB 3GPP name
Greater Than Range1 Lower Or Equal To Range2	VS.ULNoise.GtRg1LeRg2PRB16
Greater Than Range2 Lower Or Equal To Range3	VS.ULNoise.GtRg2LeRg3PRB16
Greater Than Range3 Lower Or Equal To Range4	VS.ULNoise.GtRg3LeRg4PRB16
Greater Than Range4	VS.ULNoise.GtRg4PRB16
Lower Or Equal To Range1	VS.ULNoise.LeRg1PRB16

Table A-112 Uplink Noise For PRB16 counters

5620 SAM GUI name	eNodeB 3GPP name
UL Noise Per PRB Group Gt Rg 1 Le Rg 2PR Bg 16	VS.ULNoisePerPRBGroup.GtRg1LeRg2PRBg16
UL Noise Per PRB Group Gt Rg 2 Le Rg 3PR Bg 16	VS.ULNoisePerPRBGroup.GtRg2LeRg3PRBg16
UL Noise Per PRB Group Gt Rg 3 Le Rg 4PR Bg 16	VS.ULNoisePerPRBGroup.GtRg3LeRg4PRBg16
UL Noise Per PRB Group Gt Rg 4PR Bg 16	VS.ULNoisePerPRBGroup.GtRg4PRBg16
UL Noise Per PRB Group Le Rg 1PR Bg 16	VS.ULNoisePerPRBGroup.LeRg1PRBg16

Table A-113 Uplink Noise For PRB17 counters

5620 SAM GUI name	eNodeB 3GPP name
Greater Than Range1 Lower Or Equal To Range2	VS.ULNoise.GtRg1LeRg2PRB17
Greater Than Range2 Lower Or Equal To Range3	VS.ULNoise.GtRg2LeRg3PRB17
Greater Than Range3 Lower Or Equal To Range4	VS.ULNoise.GtRg3LeRg4PRB17
Greater Than Range4	VS.ULNoise.GtRg4PRB17
Lower Or Equal To Range1	VS.ULNoise.LeRg1PRB17

Table A-114 Uplink Noise For PRB17 counters

5620 SAM GUI name	eNodeB 3GPP name
UL Noise Per PRB Group Gt Rg 1 Le Rg 2PR Bg 17	VS.ULNoisePerPRBGroup.GtRg1LeRg2PRBg17
UL Noise Per PRB Group Gt Rg 2 Le Rg 3PR Bg 17	VS.ULNoisePerPRBGroup.GtRg2LeRg3PRBg17
UL Noise Per PRB Group Gt Rg 3 Le Rg 4PR Bg 17	VS.ULNoisePerPRBGroup.GtRg3LeRg4PRBg17
UL Noise Per PRB Group Gt Rg 4PR Bg 17	VS.ULNoisePerPRBGroup.GtRg4PRBg17
UL Noise Per PRB Group Le Rg 1PR Bg 17	VS.ULNoisePerPRBGroup.LeRg1PRBg17

Table A-115 Uplink Noise For PRB18 counters

5620 SAM GUI name	eNodeB 3GPP name
Greater Than Range1 Lower Or Equal To Range2	VS.ULNoise.GtRg1LeRg2PRB18
Greater Than Range2 Lower Or Equal To Range3	VS.ULNoise.GtRg2LeRg3PRB18
Greater Than Range3 Lower Or Equal To Range4	VS.ULNoise.GtRg3LeRg4PRB18
Greater Than Range4	VS.ULNoise.GtRg4PRB18
Lower Or Equal To Range1	VS.ULNoise.LeRg1PRB18

Table A-116 Uplink Noise For PRB19 counters

5620 SAM GUI name	eNodeB 3GPP name
Greater Than Range1 Lower Or Equal To Range2	VS.ULNoise.GtRg1LeRg2PRB19
Greater Than Range2 Lower Or Equal To Range3	VS.ULNoise.GtRg2LeRg3PRB19
Greater Than Range3 Lower Or Equal To Range4	VS.ULNoise.GtRg3LeRg4PRB19
Greater Than Range4	VS.ULNoise.GtRg4PRB19
Lower Or Equal To Range1	VS.ULNoise.LeRg1PRB19

Table A-117 Uplink Noise For PRB19 counters

5620 SAM GUI name	eNodeB 3GPP name
UL Noise Per PRB Group Gt Rg 1 Le Rg 2PR Bg 19	VS.ULNoisePerPRBGroup.GtRg1LeRg2PRBg19
UL Noise Per PRB Group Gt Rg 2 Le Rg 3PR Bg 19	VS.ULNoisePerPRBGroup.GtRg2LeRg3PRBg19
UL Noise Per PRB Group Gt Rg 3 Le Rg 4PR Bg 19	VS.ULNoisePerPRBGroup.GtRg3LeRg4PRBg19
UL Noise Per PRB Group Gt Rg 4PR Bg 19	VS.ULNoisePerPRBGroup.GtRg4PRBg19
UL Noise Per PRB Group Le Rg 1PR Bg 19	VS.ULNoisePerPRBGroup.LeRg1PRBg19

Table A-118 Uplink Noise For PRB1 counters

5620 SAM GUI name	eNodeB 3GPP name
Greater Than Range1 Lower Or Equal To Range2	VS.ULNoise.GtRg1LeRg2PRB1
Greater Than Range2 Lower Or Equal To Range3	VS.ULNoise.GtRg2LeRg3PRB1
Greater Than Range3 Lower Or Equal To Range4	VS.ULNoise.GtRg3LeRg4PRB1
Greater Than Range4	VS.ULNoise.GtRg4PRB1
Lower Or Equal To Range1	VS.ULNoise.LeRg1PRB1

Table A-119 Uplink Noise For PRB1 counters

5620 SAM GUI name	eNodeB 3GPP name
Greater Than Range1 And Lower Or Equal To Range2 For 4 PRBs Group1.	VS.GtRg1LeRg2PRBg1
Greater Than Range2 And Lower Or Equal To Range3 For 4 PRBs Group1.	VS.GtRg2LeRg3PRBg1
Greater Than Range3 And Lower Or Equal To Range4 For 4 PRBs Group1.	VS.GtRg3LeRg4PRBg1
Greater Than Range4 For 4 PRBs Group1.	VS.GtRg4PRBg1
Lower Or Equal To Range1 For 4 PRBs Group1	VS.LeRg1PRBg1

Table A-120 Uplink Noise For PRB20 counters

5620 SAM GUI name	eNodeB 3GPP name
Greater Than Range1 Lower Or Equal To Range2	VS.ULNoise.GtRg1LeRg2PRB20
Greater Than Range2 Lower Or Equal To Range3	VS.ULNoise.GtRg2LeRg3PRB20
Greater Than Range3 Lower Or Equal To Range4	VS.ULNoise.GtRg3LeRg4PRB20
Greater Than Range4	VS.ULNoise.GtRg4PRB20
Lower Or Equal To Range1	VS.ULNoise.LeRg1PRB20

Table A-121 Uplink Noise For PRB20 counters

5620 SAM GUI name	eNodeB 3GPP name
UL Noise Per PRB Group Gt Rg 1 Le Rg 2PR Bg 20	VS.ULNoisePerPRBGroup.GtRg1LeRg2PRBg20
UL Noise Per PRB Group Gt Rg 2 Le Rg 3PR Bg 20	VS.ULNoisePerPRBGroup.GtRg2LeRg3PRBg20
UL Noise Per PRB Group Gt Rg 3 Le Rg 4PR Bg 20	VS.ULNoisePerPRBGroup.GtRg3LeRg4PRBg20
UL Noise Per PRB Group Gt Rg 4PR Bg 20	VS.ULNoisePerPRBGroup.GtRg4PRBg20
UL Noise Per PRB Group Le Rg 1PR Bg 20	VS.ULNoisePerPRBGroup.LeRg1PRBg20

Table A-122 Uplink Noise For PRB21 counters

5620 SAM GUI name	eNodeB 3GPP name
Greater Than Range1 Lower Or Equal To Range2	VS.ULNoise.GtRg1LeRg2PRB21
Greater Than Range2 Lower Or Equal To Range3	VS.ULNoise.GtRg2LeRg3PRB21
Greater Than Range3 Lower Or Equal To Range4	VS.ULNoise.GtRg3LeRg4PRB21
Greater Than Range4	VS.ULNoise.GtRg4PRB21
Lower Or Equal To Range1	VS.ULNoise.LeRg1PRB21

Table A-123 Uplink Noise For PRB21 counters

5620 SAM GUI name	eNodeB 3GPP name
UL Noise Per PRB Group Gt Rg 1 Le Rg 2PR Bg 21	VS.ULNoisePerPRBGroup.GtRg1LeRg2PRBg21
UL Noise Per PRB Group Gt Rg 2 Le Rg 3PR Bg 21	VS.ULNoisePerPRBGroup.GtRg2LeRg3PRBg21
UL Noise Per PRB Group Gt Rg 3 Le Rg 4PR Bg 21	VS.ULNoisePerPRBGroup.GtRg3LeRg4PRBg21
UL Noise Per PRB Group Gt Rg 4PR Bg 21	VS.ULNoisePerPRBGroup.GtRg4PRBg21
UL Noise Per PRB Group Le Rg 1PR Bg 21	VS.ULNoisePerPRBGroup.LeRg1PRBg21

Table A-124 Uplink Noise For PRB22 counters

5620 SAM GUI name	eNodeB 3GPP name
Greater Than Range1 Lower Or Equal To Range2	VS.ULNoise.GtRg1LeRg2PRB22
Greater Than Range2 Lower Or Equal To Range3	VS.ULNoise.GtRg2LeRg3PRB22
Greater Than Range3 Lower Or Equal To Range4	VS.ULNoise.GtRg3LeRg4PRB22
Greater Than Range4	VS.ULNoise.GtRg4PRB22
Lower Or Equal To Range1	VS.ULNoise.LeRg1PRB22

Table A-125 Uplink Noise For PRB22 counters

5620 SAM GUI name	eNodeB 3GPP name
UL Noise Per PRB Group Gt Rg 1 Le Rg 2PR Bg 22	VS.ULNoisePerPRBGroup.GtRg1LeRg2PRBg22
UL Noise Per PRB Group Gt Rg 2 Le Rg 3PR Bg 22	VS.ULNoisePerPRBGroup.GtRg2LeRg3PRBg22
UL Noise Per PRB Group Gt Rg 3 Le Rg 4PR Bg 22	VS.ULNoisePerPRBGroup.GtRg3LeRg4PRBg22
UL Noise Per PRB Group Gt Rg 4PR Bg 22	VS.ULNoisePerPRBGroup.GtRg4PRBg22
UL Noise Per PRB Group Le Rg 1PR Bg 22	VS.ULNoisePerPRBGroup.LeRg1PRBg22

Table A-126 Uplink Noise For PRB23 counters

5620 SAM GUI name	eNodeB 3GPP name
Greater Than Range1 Lower Or Equal To Range2	VS.ULNoise.GtRg1LeRg2PRB23
Greater Than Range2 Lower Or Equal To Range3	VS.ULNoise.GtRg2LeRg3PRB23
Greater Than Range3 Lower Or Equal To Range4	VS.ULNoise.GtRg3LeRg4PRB23
Greater Than Range4	VS.ULNoise.GtRg4PRB23
Lower Or Equal To Range1	VS.ULNoise.LeRg1PRB23

Table A-127 Uplink Noise For PRB23 counters

5620 SAM GUI name	eNodeB 3GPP name
UL Noise Per PRB Group Gt Rg 1 Le Rg 2PR Bg 23	VS.ULNoisePerPRBGroup.GtRg1LeRg2PRBg23
UL Noise Per PRB Group Gt Rg 2 Le Rg 3PR Bg 23	VS.ULNoisePerPRBGroup.GtRg2LeRg3PRBg23
UL Noise Per PRB Group Gt Rg 3 Le Rg 4PR Bg 23	VS.ULNoisePerPRBGroup.GtRg3LeRg4PRBg23
UL Noise Per PRB Group Gt Rg 4PR Bg 23	VS.ULNoisePerPRBGroup.GtRg4PRBg23
UL Noise Per PRB Group Le Rg 1PR Bg 23	VS.ULNoisePerPRBGroup.LeRg1PRBg23

Table A-128 Uplink Noise For PRB24 counters

5620 SAM GUI name	eNodeB 3GPP name
Greater Than Range1 Lower Or Equal To Range2	VS.ULNoise.GtRg1LeRg2PRB24
Greater Than Range2 Lower Or Equal To Range3	VS.ULNoise.GtRg2LeRg3PRB24
Greater Than Range3 Lower Or Equal To Range4	VS.ULNoise.GtRg3LeRg4PRB24
Greater Than Range4	VS.ULNoise.GtRg4PRB24
Lower Or Equal To Range1	VS.ULNoise.LeRg1PRB24

Table A-129 Uplink Noise For PRB24 counters

5620 SAM GUI name	eNodeB 3GPP name
UL Noise Per PRB Group Gt Rg 1 Le Rg 2PR Bg 24	VS.ULNoisePerPRBGroup.GtRg1LeRg2PRBg24
UL Noise Per PRB Group Gt Rg 2 Le Rg 3PR Bg 24	VS.ULNoisePerPRBGroup.GtRg2LeRg3PRBg24
UL Noise Per PRB Group Gt Rg 3 Le Rg 4PR Bg 24	VS.ULNoisePerPRBGroup.GtRg3LeRg4PRBg24
UL Noise Per PRB Group Gt Rg 4PR Bg 24	VS.ULNoisePerPRBGroup.GtRg4PRBg24
UL Noise Per PRB Group Le Rg 1PR Bg 24	VS.ULNoisePerPRBGroup.LeRg1PRBg24

Table A-130 Uplink Noise For PRB25 counters

5620 SAM GUI name	eNodeB 3GPP name
Greater Than Range1 Lower Or Equal To Range2	VS.ULNoise.GtRg1LeRg2PRB25
Greater Than Range2 Lower Or Equal To Range3	VS.ULNoise.GtRg2LeRg3PRB25
Greater Than Range3 Lower Or Equal To Range4	VS.ULNoise.GtRg3LeRg4PRB25
Greater Than Range4	VS.ULNoise.GtRg4PRB25
Lower Or Equal To Range1	VS.ULNoise.LeRg1PRB25

Table A-131 Uplink Noise For PRB25 counters

5620 SAM GUI name	eNodeB 3GPP name
UL Noise Per PRB Group Gt Rg 1 Le Rg 2PR Bg 25	VS.ULNoisePerPRBGroup.GtRg1LeRg2PRBg25
UL Noise Per PRB Group Gt Rg 2 Le Rg 3PR Bg 25	VS.ULNoisePerPRBGroup.GtRg2LeRg3PRBg25
UL Noise Per PRB Group Gt Rg 3 Le Rg 4PR Bg 25	VS.ULNoisePerPRBGroup.GtRg3LeRg4PRBg25
UL Noise Per PRB Group Gt Rg 4PR Bg 25	VS.ULNoisePerPRBGroup.GtRg4PRBg25
UL Noise Per PRB Group Le Rg 1PR Bg 25	VS.ULNoisePerPRBGroup.LeRg1PRBg25

Table A-132 Uplink Noise For PRB26 counters

5620 SAM GUI name	eNodeB 3GPP name
Greater Than Range1 Lower Or Equal To Range2	VS.ULNoise.GtRg1LeRg2PRB26
Greater Than Range2 Lower Or Equal To Range3	VS.ULNoise.GtRg2LeRg3PRB26
Greater Than Range3 Lower Or Equal To Range4	VS.ULNoise.GtRg3LeRg4PRB26
Greater Than Range4	VS.ULNoise.GtRg4PRB26
Lower Or Equal To Range1	VS.ULNoise.LeRg1PRB26

Table A-133 Uplink Noise For PRB27 counters

5620 SAM GUI name	eNodeB 3GPP name
Greater Than Range1 Lower Or Equal To Range2	VS.ULNoise.GtRg1LeRg2PRB27
Greater Than Range2 Lower Or Equal To Range3	VS.ULNoise.GtRg2LeRg3PRB27
Greater Than Range3 Lower Or Equal To Range4	VS.ULNoise.GtRg3LeRg4PRB27
Greater Than Range4	VS.ULNoise.GtRg4PRB27
Lower Or Equal To Range1	VS.ULNoise.LeRg1PRB27

Table A-134 Uplink Noise For PRB28 counters

5620 SAM GUI name	eNodeB 3GPP name
Greater Than Range1 Lower Or Equal To Range2	VS.ULNoise.GtRg1LeRg2PRB28
Greater Than Range2 Lower Or Equal To Range3	VS.ULNoise.GtRg2LeRg3PRB28
Greater Than Range3 Lower Or Equal To Range4	VS.ULNoise.GtRg3LeRg4PRB28
Greater Than Range4	VS.ULNoise.GtRg4PRB28
Lower Or Equal To Range1	VS.ULNoise.LeRg1PRB28

Table A-135 Uplink Noise For PRB29 counters

5620 SAM GUI name	eNodeB 3GPP name
Greater Than Range1 Lower Or Equal To Range2	VS.ULNoise.GtRg1LeRg2PRB29
Greater Than Range2 Lower Or Equal To Range3	VS.ULNoise.GtRg2LeRg3PRB29
Greater Than Range3 Lower Or Equal To Range4	VS.ULNoise.GtRg3LeRg4PRB29
Greater Than Range4	VS.ULNoise.GtRg4PRB29
Lower Or Equal To Range1	VS.ULNoise.LeRg1PRB29

Table A-136 Uplink Noise For PRB2 counters

5620 SAM GUI name	eNodeB 3GPP name
Greater Than Range1 Lower Or Equal To Range2	VS.ULNoise.GtRg1LeRg2PRB2
Greater Than Range2 Lower Or Equal To Range3	VS.ULNoise.GtRg2LeRg3PRB2
Greater Than Range3 Lower Or Equal To Range4	VS.ULNoise.GtRg3LeRg4PRB2
Greater Than Range4	VS.ULNoise.GtRg4PRB2
Lower Or Equal To Range1	VS.ULNoise.LeRg1PRB2

Table A-137 Uplink Noise For PRB2 counters

5620 SAM GUI name	eNodeB 3GPP name
Greater Than Range1 And Lower Or Equal To Range2 For 4 PRBs Group2.	VS.GtRg1LeRg2PRBg2
Greater Than Range2 And Lower Or Equal To Range3 For 4 PRBs Group2.	VS.GtRg2LeRg3PRBg2
Greater Than Range3 And Lower Or Equal To Range4 For 4 PRBs Group2.	VS.GtRg3LeRg4PRBg2
Greater Than Range4 For 4 PRBs Group2.	VS.GtRg4PRBg2
Lower Or Equal To Range1 For 4 PRBs Group2	VS.LeRg1PRBg2

Table A-138 Uplink Noise For PRB30 counters

5620 SAM GUI name	eNodeB 3GPP name
Greater Than Range1 Lower Or Equal To Range2	VS.ULNoise.GtRg1LeRg2PRB30
Greater Than Range2 Lower Or Equal To Range3	VS.ULNoise.GtRg2LeRg3PRB30
Greater Than Range3 Lower Or Equal To Range4	VS.ULNoise.GtRg3LeRg4PRB30
Greater Than Range4	VS.ULNoise.GtRg4PRB30
Lower Or Equal To Range1	VS.ULNoise.LeRg1PRB30

Table A-139 Uplink Noise For PRB31 counters

5620 SAM GUI name	eNodeB 3GPP name
Greater Than Range1 Lower Or Equal To Range2	VS.ULNoise.GtRg1LeRg2PRB31
Greater Than Range2 Lower Or Equal To Range3	VS.ULNoise.GtRg2LeRg3PRB31
Greater Than Range3 Lower Or Equal To Range4	VS.ULNoise.GtRg3LeRg4PRB31
Greater Than Range4	VS.ULNoise.GtRg4PRB31
Lower Or Equal To Range1	VS.ULNoise.LeRg1PRB31

Table A-140 Uplink Noise For PRB32 counters

5620 SAM GUI name	eNodeB 3GPP name
Greater Than Range1 Lower Or Equal To Range2	VS.ULNoise.GtRg1LeRg2PRB32
Greater Than Range2 Lower Or Equal To Range3	VS.ULNoise.GtRg2LeRg3PRB32
Greater Than Range3 Lower Or Equal To Range4	VS.ULNoise.GtRg3LeRg4PRB32
Greater Than Range4	VS.ULNoise.GtRg4PRB32
Lower Or Equal To Range1	VS.ULNoise.LeRg1PRB32

Table A-141 Uplink Noise For PRB33 counters

5620 SAM GUI name	eNodeB 3GPP name
Greater Than Range1 Lower Or Equal To Range2	VS.ULNoise.GtRg1LeRg2PRB33
Greater Than Range2 Lower Or Equal To Range3	VS.ULNoise.GtRg2LeRg3PRB33
Greater Than Range3 Lower Or Equal To Range4	VS.ULNoise.GtRg3LeRg4PRB33
Greater Than Range4	VS.ULNoise.GtRg4PRB33
Lower Or Equal To Range1	VS.ULNoise.LeRg1PRB33

Table A-142 Uplink Noise For PRB34 counters

5620 SAM GUI name	eNodeB 3GPP name
Greater Than Range1 Lower Or Equal To Range2	VS.ULNoise.GtRg1LeRg2PRB34
Greater Than Range2 Lower Or Equal To Range3	VS.ULNoise.GtRg2LeRg3PRB34
Greater Than Range3 Lower Or Equal To Range4	VS.ULNoise.GtRg3LeRg4PRB34
Greater Than Range4	VS.ULNoise.GtRg4PRB34
Lower Or Equal To Range1	VS.ULNoise.LeRg1PRB34

Table A-143 Uplink Noise For PRB35 counters

5620 SAM GUI name	eNodeB 3GPP name
Greater Than Range1 Lower Or Equal To Range2	VS.ULNoise.GtRg1LeRg2PRB35
Greater Than Range2 Lower Or Equal To Range3	VS.ULNoise.GtRg2LeRg3PRB35
Greater Than Range3 Lower Or Equal To Range4	VS.ULNoise.GtRg3LeRg4PRB35
Greater Than Range4	VS.ULNoise.GtRg4PRB35
Lower Or Equal To Range1	VS.ULNoise.LeRg1PRB35

Table A-144 Uplink Noise For PRB36 counters

5620 SAM GUI name	eNodeB 3GPP name
Greater Than Range1 Lower Or Equal To Range2	VS.ULNoise.GtRg1LeRg2PRB36
Greater Than Range2 Lower Or Equal To Range3	VS.ULNoise.GtRg2LeRg3PRB36
Greater Than Range3 Lower Or Equal To Range4	VS.ULNoise.GtRg3LeRg4PRB36
Greater Than Range4	VS.ULNoise.GtRg4PRB36
Lower Or Equal To Range1	VS.ULNoise.LeRg1PRB36

Table A-145 Uplink Noise For PRB37 counters

5620 SAM GUI name	eNodeB 3GPP name
Greater Than Range1 Lower Or Equal To Range2	VS.ULNoise.GtRg1LeRg2PRB37
Greater Than Range2 Lower Or Equal To Range3	VS.ULNoise.GtRg2LeRg3PRB37
Greater Than Range3 Lower Or Equal To Range4	VS.ULNoise.GtRg3LeRg4PRB37
Greater Than Range4	VS.ULNoise.GtRg4PRB37
Lower Or Equal To Range1	VS.ULNoise.LeRg1PRB37

Table A-146 Uplink Noise For PRB38 counters

5620 SAM GUI name	eNodeB 3GPP name
Greater Than Range1 Lower Or Equal To Range2	VS.ULNoise.GtRg1LeRg2PRB38
Greater Than Range2 Lower Or Equal To Range3	VS.ULNoise.GtRg2LeRg3PRB38
Greater Than Range3 Lower Or Equal To Range4	VS.ULNoise.GtRg3LeRg4PRB38
Greater Than Range4	VS.ULNoise.GtRg4PRB38
Lower Or Equal To Range1	VS.ULNoise.LeRg1PRB38

Table A-147 Uplink Noise For PRB39 counters

5620 SAM GUI name	eNodeB 3GPP name
Greater Than Range1 Lower Or Equal To Range2	VS.ULNoise.GtRg1LeRg2PRB39
Greater Than Range2 Lower Or Equal To Range3	VS.ULNoise.GtRg2LeRg3PRB39
Greater Than Range3 Lower Or Equal To Range4	VS.ULNoise.GtRg3LeRg4PRB39
Greater Than Range4	VS.ULNoise.GtRg4PRB39
Lower Or Equal To Range1	VS.ULNoise.LeRg1PRB39

Table A-148 Uplink Noise For PRB3 counters

5620 SAM GUI name	eNodeB 3GPP name
Greater Than Range1 Lower Or Equal To Range2	VS.ULNoise.GtRg1LeRg2PRB3
Greater Than Range2 Lower Or Equal To Range3	VS.ULNoise.GtRg2LeRg3PRB3
Greater Than Range3 Lower Or Equal To Range4	VS.ULNoise.GtRg3LeRg4PRB3
Greater Than Range4	VS.ULNoise.GtRg4PRB3
Lower Or Equal To Range1	VS.ULNoise.LeRg1PRB3

Table A-149 Uplink Noise For PRB3 counters

5620 SAM GUI name	eNodeB 3GPP name
Greater Than Range1 And Lower Or Equal To Range2 For 4 PRBs Group3.	VS.GtRg1LeRg2PRBg3
Greater Than Range2 And Lower Or Equal To Range3 For 4 PRBs Group3.	VS.GtRg2LeRg3PRBg3
Greater Than Range3 And Lower Or Equal To Range4 For 4 PRBs Group3.	VS.GtRg3LeRg4PRBg3
Greater Than Range4 For 4 PRBs Group3.	VS.GtRg4PRBg3
Lower Or Equal To Range1 For 4 PRBs Group2	VS.LeRg1PRBg3

Table A-150 Uplink Noise For PRB40 counters

5620 SAM GUI name	eNodeB 3GPP name
Greater Than Range1 Lower Or Equal To Range2	VS.ULNoise.GtRg1LeRg2PRB40
Greater Than Range2 Lower Or Equal To Range3	VS.ULNoise.GtRg2LeRg3PRB40
Greater Than Range3 Lower Or Equal To Range4	VS.ULNoise.GtRg3LeRg4PRB40
Greater Than Range4	VS.ULNoise.GtRg4PRB40
Lower Or Equal To Range1	VS.ULNoise.LeRg1PRB40

Table A-151 Uplink Noise For PRB41 counters

5620 SAM GUI name	eNodeB 3GPP name
Greater Than Range1 Lower Or Equal To Range2	VS.ULNoise.GtRg1LeRg2PRB41
Greater Than Range2 Lower Or Equal To Range3	VS.ULNoise.GtRg2LeRg3PRB41
Greater Than Range3 Lower Or Equal To Range4	VS.ULNoise.GtRg3LeRg4PRB41
Greater Than Range4	VS.ULNoise.GtRg4PRB41
Lower Or Equal To Range1	VS.ULNoise.LeRg1PRB41

Table A-152 Uplink Noise For PRB42 counters

5620 SAM GUI name	eNodeB 3GPP name
Greater Than Range1 Lower Or Equal To Range2	VS.ULNoise.GtRg1LeRg2PRB42
Greater Than Range2 Lower Or Equal To Range3	VS.ULNoise.GtRg2LeRg3PRB42
Greater Than Range3 Lower Or Equal To Range4	VS.ULNoise.GtRg3LeRg4PRB42
Greater Than Range4	VS.ULNoise.GtRg4PRB42
Lower Or Equal To Range1	VS.ULNoise.LeRg1PRB42

Table A-153 Uplink Noise For PRB43 counters

5620 SAM GUI name	eNodeB 3GPP name
Greater Than Range1 Lower Or Equal To Range2	VS.ULNoise.GtRg1LeRg2PRB43
Greater Than Range2 Lower Or Equal To Range3	VS.ULNoise.GtRg2LeRg3PRB43
Greater Than Range3 Lower Or Equal To Range4	VS.ULNoise.GtRg3LeRg4PRB43
Greater Than Range4	VS.ULNoise.GtRg4PRB43
Lower Or Equal To Range1	VS.ULNoise.LeRg1PRB43

Table A-154 Uplink Noise For PRB44 counters

5620 SAM GUI name	eNodeB 3GPP name
Greater Than Range1 Lower Or Equal To Range2	VS.ULNoise.GtRg1LeRg2PRB44
Greater Than Range2 Lower Or Equal To Range3	VS.ULNoise.GtRg2LeRg3PRB44
Greater Than Range3 Lower Or Equal To Range4	VS.ULNoise.GtRg3LeRg4PRB44
Greater Than Range4	VS.ULNoise.GtRg4PRB44
Lower Or Equal To Range1	VS.ULNoise.LeRg1PRB44

Table A-155 Uplink Noise For PRB45 counters

5620 SAM GUI name	eNodeB 3GPP name
Greater Than Range1 Lower Or Equal To Range2	VS.ULNoise.GtRg1LeRg2PRB45
Greater Than Range2 Lower Or Equal To Range3	VS.ULNoise.GtRg2LeRg3PRB45
Greater Than Range3 Lower Or Equal To Range4	VS.ULNoise.GtRg3LeRg4PRB45
Greater Than Range4	VS.ULNoise.GtRg4PRB45
Lower Or Equal To Range1	VS.ULNoise.LeRg1PRB45

Table A-156 Uplink Noise For PRB46 counters

5620 SAM GUI name	eNodeB 3GPP name
Greater Than Range1 Lower Or Equal To Range2	VS.ULNoise.GtRg1LeRg2PRB46
Greater Than Range2 Lower Or Equal To Range3	VS.ULNoise.GtRg2LeRg3PRB46
Greater Than Range3 Lower Or Equal To Range4	VS.ULNoise.GtRg3LeRg4PRB46
Greater Than Range4	VS.ULNoise.GtRg4PRB46
Lower Or Equal To Range1	VS.ULNoise.LeRg1PRB46

Table A-157 Uplink Noise For PRB47 counters

5620 SAM GUI name	eNodeB 3GPP name
Greater Than Range1 Lower Or Equal To Range2	VS.ULNoise.GtRg1LeRg2PRB47
Greater Than Range2 Lower Or Equal To Range3	VS.ULNoise.GtRg2LeRg3PRB47
Greater Than Range3 Lower Or Equal To Range4	VS.ULNoise.GtRg3LeRg4PRB47
Greater Than Range4	VS.ULNoise.GtRg4PRB47
Lower Or Equal To Range1	VS.ULNoise.LeRg1PRB47

Table A-158 Uplink Noise For PRB48 counters

5620 SAM GUI name	eNodeB 3GPP name
Greater Than Range1 Lower Or Equal To Range2	VS.ULNoise.GtRg1LeRg2PRB48
Greater Than Range2 Lower Or Equal To Range3	VS.ULNoise.GtRg2LeRg3PRB48
Greater Than Range3 Lower Or Equal To Range4	VS.ULNoise.GtRg3LeRg4PRB48
Greater Than Range4	VS.ULNoise.GtRg4PRB48
Lower Or Equal To Range1	VS.ULNoise.LeRg1PRB48

Table A-159 Uplink Noise For PRB49 counters

5620 SAM GUI name	eNodeB 3GPP name
Greater Than Range1 Lower Or Equal To Range2	VS.ULNoise.GtRg1LeRg2PRB49
Greater Than Range2 Lower Or Equal To Range3	VS.ULNoise.GtRg2LeRg3PRB49
Greater Than Range3 Lower Or Equal To Range4	VS.ULNoise.GtRg3LeRg4PRB49
Greater Than Range4	VS.ULNoise.GtRg4PRB49
Lower Or Equal To Range1	VS.ULNoise.LeRg1PRB49

Table A-160 Uplink Noise For PRB4 counters

5620 SAM GUI name	eNodeB 3GPP name
Greater Than Range1 Lower Or Equal To Range2	VS.ULNoise.GtRg1LeRg2PRB4
Greater Than Range2 Lower Or Equal To Range3	VS.ULNoise.GtRg2LeRg3PRB4
Greater Than Range3 Lower Or Equal To Range4	VS.ULNoise.GtRg3LeRg4PRB4
Greater Than Range4	VS.ULNoise.GtRg4PRB4
Lower Or Equal To Range1	VS.ULNoise.LeRg1PRB4

Table A-161 Uplink Noise For PRB4 counters

5620 SAM GUI name	eNodeB 3GPP name
Gt Rg 1 Le Rg 2PR Bg 4	VS.GtRg1LeRg2PRBg4
Gt Rg 2 Le Rg 3PR Bg 4	VS.GtRg2LeRg3PRBg4
Gt Rg 3 Le Rg 4PR Bg 4	VS.GtRg3LeRg4PRBg4
Gt Rg 4PR Bg 4	VS.GtRg4PRBg4
Le Rg 1PR Bg 4	VS.LeRg1PRBg4

Table A-162 Uplink Noise For PRB50 counters

5620 SAM GUI name	eNodeB 3GPP name
Greater Than Range1 Lower Or Equal To Range2	VS.ULNoise.GtRg1LeRg2PRB50
Greater Than Range2 Lower Or Equal To Range3	VS.ULNoise.GtRg2LeRg3PRB50
Greater Than Range3 Lower Or Equal To Range4	VS.ULNoise.GtRg3LeRg4PRB50
Greater Than Range4	VS.ULNoise.GtRg4PRB50
Lower Or Equal To Range1	VS.ULNoise.LeRg1PRB50

Table A-163 Uplink Noise For PRB51 counters

5620 SAM GUI name	eNodeB 3GPP name
Greater Than Range1 Lower Or Equal To Range2	VS.ULNoise.GtRg1LeRg2PRB51
Greater Than Range2 Lower Or Equal To Range3	VS.ULNoise.GtRg2LeRg3PRB51
Greater Than Range3 Lower Or Equal To Range4	VS.ULNoise.GtRg3LeRg4PRB51
Greater Than Range4	VS.ULNoise.GtRg4PRB51
Lower Or Equal To Range1	VS.ULNoise.LeRg1PRB51

Table A-164 Uplink Noise For PRB52 counters

5620 SAM GUI name	eNodeB 3GPP name
Greater Than Range1 Lower Or Equal To Range2	VS.ULNoise.GtRg1LeRg2PRB52
Greater Than Range2 Lower Or Equal To Range3	VS.ULNoise.GtRg2LeRg3PRB52
Greater Than Range3 Lower Or Equal To Range4	VS.ULNoise.GtRg3LeRg4PRB52
Greater Than Range4	VS.ULNoise.GtRg4PRB52
Lower Or Equal To Range1	VS.ULNoise.LeRg1PRB52

Table A-165 Uplink Noise For PRB53 counters

5620 SAM GUI name	eNodeB 3GPP name
Greater Than Range1 Lower Or Equal To Range2	VS.ULNoise.GtRg1LeRg2PRB53
Greater Than Range2 Lower Or Equal To Range3	VS.ULNoise.GtRg2LeRg3PRB53
Greater Than Range3 Lower Or Equal To Range4	VS.ULNoise.GtRg3LeRg4PRB53
Greater Than Range4	VS.ULNoise.GtRg4PRB53
Lower Or Equal To Range1	VS.ULNoise.LeRg1PRB53

Table A-166 Uplink Noise For PRB54 counters

5620 SAM GUI name	eNodeB 3GPP name
Greater Than Range1 Lower Or Equal To Range2	VS.ULNoise.GtRg1LeRg2PRB54
Greater Than Range2 Lower Or Equal To Range3	VS.ULNoise.GtRg2LeRg3PRB54
Greater Than Range3 Lower Or Equal To Range4	VS.ULNoise.GtRg3LeRg4PRB54
Greater Than Range4	VS.ULNoise.GtRg4PRB54
Lower Or Equal To Range1	VS.ULNoise.LeRg1PRB54

Table A-167 Uplink Noise For PRB55 counters

5620 SAM GUI name	eNodeB 3GPP name
Greater Than Range1 Lower Or Equal To Range2	VS.ULNoise.GtRg1LeRg2PRB55
Greater Than Range2 Lower Or Equal To Range3	VS.ULNoise.GtRg2LeRg3PRB55
Greater Than Range3 Lower Or Equal To Range4	VS.ULNoise.GtRg3LeRg4PRB55
Greater Than Range4	VS.ULNoise.GtRg4PRB55
Lower Or Equal To Range1	VS.ULNoise.LeRg1PRB55

Table A-168 Uplink Noise For PRB56 counters

5620 SAM GUI name	eNodeB 3GPP name
Greater Than Range1 Lower Or Equal To Range2	VS.ULNoise.GtRg1LeRg2PRB56
Greater Than Range2 Lower Or Equal To Range3	VS.ULNoise.GtRg2LeRg3PRB56
Greater Than Range3 Lower Or Equal To Range4	VS.ULNoise.GtRg3LeRg4PRB56
Greater Than Range4	VS.ULNoise.GtRg4PRB56
Lower Or Equal To Range1	VS.ULNoise.LeRg1PRB56

Table A-169 Uplink Noise For PRB57 counters

5620 SAM GUI name	eNodeB 3GPP name
Greater Than Range1 Lower Or Equal To Range2	VS.ULNoise.GtRg1LeRg2PRB57
Greater Than Range2 Lower Or Equal To Range3	VS.ULNoise.GtRg2LeRg3PRB57
Greater Than Range3 Lower Or Equal To Range4	VS.ULNoise.GtRg3LeRg4PRB57
Greater Than Range4	VS.ULNoise.GtRg4PRB57
Lower Or Equal To Range1	VS.ULNoise.LeRg1PRB57

Table A-170 Uplink Noise For PRB58 counters

5620 SAM GUI name	eNodeB 3GPP name
Greater Than Range1 Lower Or Equal To Range2	VS.ULNoise.GtRg1LeRg2PRB58
Greater Than Range2 Lower Or Equal To Range3	VS.ULNoise.GtRg2LeRg3PRB58
Greater Than Range3 Lower Or Equal To Range4	VS.ULNoise.GtRg3LeRg4PRB58
Greater Than Range4	VS.ULNoise.GtRg4PRB58
Lower Or Equal To Range1	VS.ULNoise.LeRg1PRB58

Table A-171 Uplink Noise For PRB59 counters

5620 SAM GUI name	eNodeB 3GPP name
Greater Than Range1 Lower Or Equal To Range2	VS.ULNoise.GtRg1LeRg2PRB59
Greater Than Range2 Lower Or Equal To Range3	VS.ULNoise.GtRg2LeRg3PRB59
Greater Than Range3 Lower Or Equal To Range4	VS.ULNoise.GtRg3LeRg4PRB59
Greater Than Range4	VS.ULNoise.GtRg4PRB59
Lower Or Equal To Range1	VS.ULNoise.LeRg1PRB59

Table A-172 Uplink Noise For PRB5 counters

5620 SAM GUI name	eNodeB 3GPP name
Greater Than Range1 Lower Or Equal To Range2	VS.ULNoise.GtRg1LeRg2PRB5
Greater Than Range2 Lower Or Equal To Range3	VS.ULNoise.GtRg2LeRg3PRB5
Greater Than Range3 Lower Or Equal To Range4	VS.ULNoise.GtRg3LeRg4PRB5
Greater Than Range4	VS.ULNoise.GtRg4PRB5
Lower Or Equal To Range1	VS.ULNoise.LeRg1PRB5

Table A-173 Uplink Noise For PRB5 counters

5620 SAM GUI name	eNodeB 3GPP name
UL Noise Per PRB Group Gt Rg 1 Le Rg 2PR Bg 5	VS.ULNoisePerPRBGroup.GtRg1LeRg2PRBg5
UL Noise Per PRB Group Gt Rg 2 Le Rg 3PR Bg 5	VS.ULNoisePerPRBGroup.GtRg2LeRg3PRBg5
UL Noise Per PRB Group Gt Rg 3 Le Rg 4PR Bg 5	VS.ULNoisePerPRBGroup.GtRg3LeRg4PRBg5
UL Noise Per PRB Group Gt Rg 4PR Bg 5	VS.ULNoisePerPRBGroup.GtRg4PRBg5
UL Noise Per PRB Group Le Rg 1PR Bg 5	VS.ULNoisePerPRBGroup.LeRg1PRBg5

Table A-174 Uplink Noise For PRB60 counters

5620 SAM GUI name	eNodeB 3GPP name
Greater Than Range1 Lower Or Equal To Range2	VS.ULNoise.GtRg1LeRg2PRB60
Greater Than Range2 Lower Or Equal To Range3	VS.ULNoise.GtRg2LeRg3PRB60
Greater Than Range3 Lower Or Equal To Range4	VS.ULNoise.GtRg3LeRg4PRB60
Greater Than Range4	VS.ULNoise.GtRg4PRB60
Lower Or Equal To Range1	VS.ULNoise.LeRg1PRB60

Table A-175 Uplink Noise For PRB61 counters

5620 SAM GUI name	eNodeB 3GPP name
Greater Than Range1 Lower Or Equal To Range2	VS.ULNoise.GtRg1LeRg2PRB61
Greater Than Range2 Lower Or Equal To Range3	VS.ULNoise.GtRg2LeRg3PRB61
Greater Than Range3 Lower Or Equal To Range4	VS.ULNoise.GtRg3LeRg4PRB61
Greater Than Range4	VS.ULNoise.GtRg4PRB61
Lower Or Equal To Range1	VS.ULNoise.LeRg1PRB61

Table A-176 Uplink Noise For PRB62 counters

5620 SAM GUI name	eNodeB 3GPP name
Greater Than Range1 Lower Or Equal To Range2	VS.ULNoise.GtRg1LeRg2PRB62
Greater Than Range2 Lower Or Equal To Range3	VS.ULNoise.GtRg2LeRg3PRB62
Greater Than Range3 Lower Or Equal To Range4	VS.ULNoise.GtRg3LeRg4PRB62
Greater Than Range4	VS.ULNoise.GtRg4PRB62
Lower Or Equal To Range1	VS.ULNoise.LeRg1PRB62

Table A-177 Uplink Noise For PRB63 counters

5620 SAM GUI name	eNodeB 3GPP name
Greater Than Range1 Lower Or Equal To Range2	VS.ULNoise.GtRg1LeRg2PRB63
Greater Than Range2 Lower Or Equal To Range3	VS.ULNoise.GtRg2LeRg3PRB63
Greater Than Range3 Lower Or Equal To Range4	VS.ULNoise.GtRg3LeRg4PRB63
Greater Than Range4	VS.ULNoise.GtRg4PRB63
Lower Or Equal To Range1	VS.ULNoise.LeRg1PRB63

Table A-178 Uplink Noise For PRB64 counters

5620 SAM GUI name	eNodeB 3GPP name
Greater Than Range1 Lower Or Equal To Range2	VS.ULNoise.GtRg1LeRg2PRB64
Greater Than Range2 Lower Or Equal To Range3	VS.ULNoise.GtRg2LeRg3PRB64
Greater Than Range3 Lower Or Equal To Range4	VS.ULNoise.GtRg3LeRg4PRB64
Greater Than Range4	VS.ULNoise.GtRg4PRB64
Lower Or Equal To Range1	VS.ULNoise.LeRg1PRB64

Table A-179 Uplink Noise For PRB65 counters

5620 SAM GUI name	eNodeB 3GPP name
Greater Than Range1 Lower Or Equal To Range2	VS.ULNoise.GtRg1LeRg2PRB65
Greater Than Range2 Lower Or Equal To Range3	VS.ULNoise.GtRg2LeRg3PRB65
Greater Than Range3 Lower Or Equal To Range4	VS.ULNoise.GtRg3LeRg4PRB65
Greater Than Range4	VS.ULNoise.GtRg4PRB65
Lower Or Equal To Range1	VS.ULNoise.LeRg1PRB65

Table A-180 Uplink Noise For PRB66 counters

5620 SAM GUI name	eNodeB 3GPP name
Greater Than Range1 Lower Or Equal To Range2	VS.ULNoise.GtRg1LeRg2PRB66
Greater Than Range2 Lower Or Equal To Range3	VS.ULNoise.GtRg2LeRg3PRB66
Greater Than Range3 Lower Or Equal To Range4	VS.ULNoise.GtRg3LeRg4PRB66
Greater Than Range4	VS.ULNoise.GtRg4PRB66
Lower Or Equal To Range1	VS.ULNoise.LeRg1PRB66

Table A-181 Uplink Noise For PRB67 counters

5620 SAM GUI name	eNodeB 3GPP name
Greater Than Range1 Lower Or Equal To Range2	VS.ULNoise.GtRg1LeRg2PRB67
Greater Than Range2 Lower Or Equal To Range3	VS.ULNoise.GtRg2LeRg3PRB67
Greater Than Range3 Lower Or Equal To Range4	VS.ULNoise.GtRg3LeRg4PRB67
Greater Than Range4	VS.ULNoise.GtRg4PRB67
Lower Or Equal To Range1	VS.ULNoise.LeRg1PRB67

Table A-182 Uplink Noise For PRB68 counters

5620 SAM GUI name	eNodeB 3GPP name
Greater Than Range1 Lower Or Equal To Range2	VS.ULNoise.GtRg1LeRg2PRB68
Greater Than Range2 Lower Or Equal To Range3	VS.ULNoise.GtRg2LeRg3PRB68
Greater Than Range3 Lower Or Equal To Range4	VS.ULNoise.GtRg3LeRg4PRB68
Greater Than Range4	VS.ULNoise.GtRg4PRB68
Lower Or Equal To Range1	VS.ULNoise.LeRg1PRB68

Table A-183 Uplink Noise For PRB69 counters

5620 SAM GUI name	eNodeB 3GPP name
Greater Than Range1 Lower Or Equal To Range2	VS.ULNoise.GtRg1LeRg2PRB69
Greater Than Range2 Lower Or Equal To Range3	VS.ULNoise.GtRg2LeRg3PRB69
Greater Than Range3 Lower Or Equal To Range4	VS.ULNoise.GtRg3LeRg4PRB69
Greater Than Range4	VS.ULNoise.GtRg4PRB69
Lower Or Equal To Range1	VS.ULNoise.LeRg1PRB69

Table A-184 Uplink Noise For PRB6 counters

5620 SAM GUI name	eNodeB 3GPP name
Greater Than Range1 Lower Or Equal To Range2	VS.ULNoise.GtRg1LeRg2PRB6
Greater Than Range2 Lower Or Equal To Range3	VS.ULNoise.GtRg2LeRg3PRB6
Greater Than Range3 Lower Or Equal To Range4	VS.ULNoise.GtRg3LeRg4PRB6
Greater Than Range4	VS.ULNoise.GtRg4PRB6
Lower Or Equal To Range1	VS.ULNoise.LeRg1PRB6

Table A-185 Uplink Noise For PRB6 counters

5620 SAM GUI name	eNodeB 3GPP name
UL Noise Per PRB Group Gt Rg 1 Le Rg 2PR Bg 6	VS.ULNoisePerPRBGroup.GtRg1LeRg2PRBg6
UL Noise Per PRB Group Gt Rg 2 Le Rg 3PR Bg 6	VS.ULNoisePerPRBGroup.GtRg2LeRg3PRBg6
UL Noise Per PRB Group Gt Rg 3 Le Rg 4PR Bg 6	VS.ULNoisePerPRBGroup.GtRg3LeRg4PRBg6
UL Noise Per PRB Group Gt Rg 4PR Bg 6	VS.ULNoisePerPRBGroup.GtRg4PRBg6
UL Noise Per PRB Group Le Rg 1PR Bg 6	VS.ULNoisePerPRBGroup.LeRg1PRBg6

Table A-186 Uplink Noise For PRB70 counters

5620 SAM GUI name	eNodeB 3GPP name
Greater Than Range1 Lower Or Equal To Range2	VS.ULNoise.GtRg1LeRg2PRB70
Greater Than Range2 Lower Or Equal To Range3	VS.ULNoise.GtRg2LeRg3PRB70
Greater Than Range3 Lower Or Equal To Range4	VS.ULNoise.GtRg3LeRg4PRB70
Greater Than Range4	VS.ULNoise.GtRg4PRB70
Lower Or Equal To Range1	VS.ULNoise.LeRg1PRB70

Table A-187 Uplink Noise For PRB71 counters

5620 SAM GUI name	eNodeB 3GPP name
Greater Than Range1 Lower Or Equal To Range2	VS.ULNoise.GtRg1LeRg2PRB71
Greater Than Range2 Lower Or Equal To Range3	VS.ULNoise.GtRg2LeRg3PRB71
Greater Than Range3 Lower Or Equal To Range4	VS.ULNoise.GtRg3LeRg4PRB71
Greater Than Range4	VS.ULNoise.GtRg4PRB71
Lower Or Equal To Range1	VS.ULNoise.LeRg1PRB71

Table A-188 Uplink Noise For PRB72 counters

5620 SAM GUI name	eNodeB 3GPP name
Greater Than Range1 Lower Or Equal To Range2	VS.ULNoise.GtRg1LeRg2PRB72
Greater Than Range2 Lower Or Equal To Range3	VS.ULNoise.GtRg2LeRg3PRB72
Greater Than Range3 Lower Or Equal To Range4	VS.ULNoise.GtRg3LeRg4PRB72
Greater Than Range4	VS.ULNoise.GtRg4PRB72
Lower Or Equal To Range1	VS.ULNoise.LeRg1PRB72

Table A-189 Uplink Noise For PRB73 counters

5620 SAM GUI name	eNodeB 3GPP name
Greater Than Range1 Lower Or Equal To Range2	VS.ULNoise.GtRg1LeRg2PRB73
Greater Than Range2 Lower Or Equal To Range3	VS.ULNoise.GtRg2LeRg3PRB73
Greater Than Range3 Lower Or Equal To Range4	VS.ULNoise.GtRg3LeRg4PRB73
Greater Than Range4	VS.ULNoise.GtRg4PRB73
Lower Or Equal To Range1	VS.ULNoise.LeRg1PRB73

Table A-190 Uplink Noise For PRB74 counters

5620 SAM GUI name	eNodeB 3GPP name
Greater Than Range1 Lower Or Equal To Range2	VS.ULNoise.GtRg1LeRg2PRB74
Greater Than Range2 Lower Or Equal To Range3	VS.ULNoise.GtRg2LeRg3PRB74
Greater Than Range3 Lower Or Equal To Range4	VS.ULNoise.GtRg3LeRg4PRB74
Greater Than Range4	VS.ULNoise.GtRg4PRB74
Lower Or Equal To Range1	VS.ULNoise.LeRg1PRB74

Table A-191 Uplink Noise For PRB75 counters

5620 SAM GUI name	eNodeB 3GPP name
Greater Than Range1 Lower Or Equal To Range2	VS.ULNoise.GtRg1LeRg2PRB75
Greater Than Range2 Lower Or Equal To Range3	VS.ULNoise.GtRg2LeRg3PRB75
Greater Than Range3 Lower Or Equal To Range4	VS.ULNoise.GtRg3LeRg4PRB75
Greater Than Range4	VS.ULNoise.GtRg4PRB75
Lower Or Equal To Range1	VS.ULNoise.LeRg1PRB75

Table A-192 Uplink Noise For PRB76 counters

5620 SAM GUI name	eNodeB 3GPP name
Greater Than Range1 Lower Or Equal To Range2	VS.ULNoise.GtRg1LeRg2PRB76
Greater Than Range2 Lower Or Equal To Range3	VS.ULNoise.GtRg2LeRg3PRB76
Greater Than Range3 Lower Or Equal To Range4	VS.ULNoise.GtRg3LeRg4PRB76
Greater Than Range4	VS.ULNoise.GtRg4PRB76
Lower Or Equal To Range1	VS.ULNoise.LeRg1PRB76

Table A-193 Uplink Noise For PRB77 counters

5620 SAM GUI name	eNodeB 3GPP name
Greater Than Range1 Lower Or Equal To Range2	VS.ULNoise.GtRg1LeRg2PRB77
Greater Than Range2 Lower Or Equal To Range3	VS.ULNoise.GtRg2LeRg3PRB77
Greater Than Range3 Lower Or Equal To Range4	VS.ULNoise.GtRg3LeRg4PRB77
Greater Than Range4	VS.ULNoise.GtRg4PRB77
Lower Or Equal To Range1	VS.ULNoise.LeRg1PRB77

Table A-194 Uplink Noise For PRB78 counters

5620 SAM GUI name	eNodeB 3GPP name
Greater Than Range1 Lower Or Equal To Range2	VS.ULNoise.GtRg1LeRg2PRB78
Greater Than Range2 Lower Or Equal To Range3	VS.ULNoise.GtRg2LeRg3PRB78
Greater Than Range3 Lower Or Equal To Range4	VS.ULNoise.GtRg3LeRg4PRB78
Greater Than Range4	VS.ULNoise.GtRg4PRB78
Lower Or Equal To Range1	VS.ULNoise.LeRg1PRB78

Table A-195 Uplink Noise For PRB79 counters

5620 SAM GUI name	eNodeB 3GPP name
Greater Than Range1 Lower Or Equal To Range2	VS.ULNoise.GtRg1LeRg2PRB79
Greater Than Range2 Lower Or Equal To Range3	VS.ULNoise.GtRg2LeRg3PRB79
Greater Than Range3 Lower Or Equal To Range4	VS.ULNoise.GtRg3LeRg4PRB79
Greater Than Range4	VS.ULNoise.GtRg4PRB79
Lower Or Equal To Range1	VS.ULNoise.LeRg1PRB79

Table A-196 Uplink Noise For PRB7 counters

5620 SAM GUI name	eNodeB 3GPP name
Greater Than Range1 Lower Or Equal To Range2	VS.ULNoise.GtRg1LeRg2PRB7
Greater Than Range2 Lower Or Equal To Range3	VS.ULNoise.GtRg2LeRg3PRB7
Greater Than Range3 Lower Or Equal To Range4	VS.ULNoise.GtRg3LeRg4PRB7
Greater Than Range4	VS.ULNoise.GtRg4PRB7
Lower Or Equal To Range1	VS.ULNoise.LeRg1PRB7

Table A-197 Uplink Noise For PRB7 counters

5620 SAM GUI name	eNodeB 3GPP name
UL Noise Per PRB Group Gt Rg 1 Le Rg 2PR Bg 7	VS.ULNoisePerPRBGroup.GtRg1LeRg2PRBg7
UL Noise Per PRB Group Gt Rg 2 Le Rg 3PR Bg 7	VS.ULNoisePerPRBGroup.GtRg2LeRg3PRBg7
UL Noise Per PRB Group Gt Rg 3 Le Rg 4PR Bg 7	VS.ULNoisePerPRBGroup.GtRg3LeRg4PRBg7
UL Noise Per PRB Group Gt Rg 4PR Bg 7	VS.ULNoisePerPRBGroup.GtRg4PRBg7
UL Noise Per PRB Group Le Rg 1PR Bg 7	VS.ULNoisePerPRBGroup.LeRg1PRBg7

Table A-198 Uplink Noise For PRB80 counters

5620 SAM GUI name	eNodeB 3GPP name
Greater Than Range1 Lower Or Equal To Range2	VS.ULNoise.GtRg1LeRg2PRB80
Greater Than Range2 Lower Or Equal To Range3	VS.ULNoise.GtRg2LeRg3PRB80
Greater Than Range3 Lower Or Equal To Range4	VS.ULNoise.GtRg3LeRg4PRB80
Greater Than Range4	VS.ULNoise.GtRg4PRB80
Lower Or Equal To Range1	VS.ULNoise.LeRg1PRB80

Table A-199 Uplink Noise For PRB81 counters

5620 SAM GUI name	eNodeB 3GPP name
Greater Than Range1 Lower Or Equal To Range2	VS.ULNoise.GtRg1LeRg2PRB81
Greater Than Range2 Lower Or Equal To Range3	VS.ULNoise.GtRg2LeRg3PRB81
Greater Than Range3 Lower Or Equal To Range4	VS.ULNoise.GtRg3LeRg4PRB81
Greater Than Range4	VS.ULNoise.GtRg4PRB81
Lower Or Equal To Range1	VS.ULNoise.LeRg1PRB81

Table A-200 Uplink Noise For PRB82 counters

5620 SAM GUI name	eNodeB 3GPP name
Greater Than Range1 Lower Or Equal To Range2	VS.ULNoise.GtRg1LeRg2PRB82
Greater Than Range2 Lower Or Equal To Range3	VS.ULNoise.GtRg2LeRg3PRB82
Greater Than Range3 Lower Or Equal To Range4	VS.ULNoise.GtRg3LeRg4PRB82
Greater Than Range4	VS.ULNoise.GtRg4PRB82
Lower Or Equal To Range1	VS.ULNoise.LeRg1PRB82

Table A-201 Uplink Noise For PRB83 counters

5620 SAM GUI name	eNodeB 3GPP name
Greater Than Range1 Lower Or Equal To Range2	VS.ULNoise.GtRg1LeRg2PRB83
Greater Than Range2 Lower Or Equal To Range3	VS.ULNoise.GtRg2LeRg3PRB83
Greater Than Range3 Lower Or Equal To Range4	VS.ULNoise.GtRg3LeRg4PRB83
Greater Than Range4	VS.ULNoise.GtRg4PRB83
Lower Or Equal To Range1	VS.ULNoise.LeRg1PRB83

Table A-202 Uplink Noise For PRB84 counters

5620 SAM GUI name	eNodeB 3GPP name
Greater Than Range1 Lower Or Equal To Range2	VS.ULNoise.GtRg1LeRg2PRB84
Greater Than Range2 Lower Or Equal To Range3	VS.ULNoise.GtRg2LeRg3PRB84
Greater Than Range3 Lower Or Equal To Range4	VS.ULNoise.GtRg3LeRg4PRB84
Greater Than Range4	VS.ULNoise.GtRg4PRB84
Lower Or Equal To Range1	VS.ULNoise.LeRg1PRB84

Table A-203 Uplink Noise For PRB85 counters

5620 SAM GUI name	eNodeB 3GPP name
Greater Than Range1 Lower Or Equal To Range2	VS.ULNoise.GtRg1LeRg2PRB85
Greater Than Range2 Lower Or Equal To Range3	VS.ULNoise.GtRg2LeRg3PRB85
Greater Than Range3 Lower Or Equal To Range4	VS.ULNoise.GtRg3LeRg4PRB85
Greater Than Range4	VS.ULNoise.GtRg4PRB85
Lower Or Equal To Range1	VS.ULNoise.LeRg1PRB85

Table A-204 Uplink Noise For PRB86 counters

5620 SAM GUI name	eNodeB 3GPP name
Greater Than Range1 Lower Or Equal To Range2	VS.ULNoise.GtRg1LeRg2PRB86
Greater Than Range2 Lower Or Equal To Range3	VS.ULNoise.GtRg2LeRg3PRB86
Greater Than Range3 Lower Or Equal To Range4	VS.ULNoise.GtRg3LeRg4PRB86
Greater Than Range4	VS.ULNoise.GtRg4PRB86
Lower Or Equal To Range1	VS.ULNoise.LeRg1PRB86

Table A-205 Uplink Noise For PRB87 counters

5620 SAM GUI name	eNodeB 3GPP name
Greater Than Range1 Lower Or Equal To Range2	VS.ULNoise.GtRg1LeRg2PRB87
Greater Than Range2 Lower Or Equal To Range3	VS.ULNoise.GtRg2LeRg3PRB87
Greater Than Range3 Lower Or Equal To Range4	VS.ULNoise.GtRg3LeRg4PRB87
Greater Than Range4	VS.ULNoise.GtRg4PRB87
Lower Or Equal To Range1	VS.ULNoise.LeRg1PRB87

Table A-206 Uplink Noise For PRB88 counters

5620 SAM GUI name	eNodeB 3GPP name
Greater Than Range1 Lower Or Equal To Range2	VS.ULNoise.GtRg1LeRg2PRB88
Greater Than Range2 Lower Or Equal To Range3	VS.ULNoise.GtRg2LeRg3PRB88
Greater Than Range3 Lower Or Equal To Range4	VS.ULNoise.GtRg3LeRg4PRB88
Greater Than Range4	VS.ULNoise.GtRg4PRB88
Lower Or Equal To Range1	VS.ULNoise.LeRg1PRB88

Table A-207 Uplink Noise For PRB89 counters

5620 SAM GUI name	eNodeB 3GPP name
Greater Than Range1 Lower Or Equal To Range2	VS.ULNoise.GtRg1LeRg2PRB89
Greater Than Range2 Lower Or Equal To Range3	VS.ULNoise.GtRg2LeRg3PRB89
Greater Than Range3 Lower Or Equal To Range4	VS.ULNoise.GtRg3LeRg4PRB89
Greater Than Range4	VS.ULNoise.GtRg4PRB89
Lower Or Equal To Range1	VS.ULNoise.LeRg1PRB89

Table A-208 Uplink Noise For PRB8 counters

5620 SAM GUI name	eNodeB 3GPP name
Greater Than Range1 Lower Or Equal To Range2	VS.ULNoise.GtRg1LeRg2PRB8
Greater Than Range2 Lower Or Equal To Range3	VS.ULNoise.GtRg2LeRg3PRB8
Greater Than Range3 Lower Or Equal To Range4	VS.ULNoise.GtRg3LeRg4PRB8
Greater Than Range4	VS.ULNoise.GtRg4PRB8
Lower Or Equal To Range1	VS.ULNoise.LeRg1PRB8

Table A-209 Uplink Noise For PRB8 counters

5620 SAM GUI name	eNodeB 3GPP name
UL Noise Per PRB Group Gt Rg 1 Le Rg 2PR Bg 8	VS.ULNoisePerPRBGroup.GtRg1LeRg2PRBg8
UL Noise Per PRB Group Gt Rg 2 Le Rg 3PR Bg 8	VS.ULNoisePerPRBGroup.GtRg2LeRg3PRBg8
UL Noise Per PRB Group Gt Rg 3 Le Rg 4PR Bg 8	VS.ULNoisePerPRBGroup.GtRg3LeRg4PRBg8
UL Noise Per PRB Group Gt Rg 4PR Bg 8	VS.ULNoisePerPRBGroup.GtRg4PRBg8
UL Noise Per PRB Group Le Rg 1PR Bg 8	VS.ULNoisePerPRBGroup.LeRg1PRBg8

Table A-210 Uplink Noise For PRB90 counters

5620 SAM GUI name	eNodeB 3GPP name
Greater Than Range1 Lower Or Equal To Range2	VS.ULNoise.GtRg1LeRg2PRB90
Greater Than Range2 Lower Or Equal To Range3	VS.ULNoise.GtRg2LeRg3PRB90
Greater Than Range3 Lower Or Equal To Range4	VS.ULNoise.GtRg3LeRg4PRB90
Greater Than Range4	VS.ULNoise.GtRg4PRB90
Lower Or Equal To Range1	VS.ULNoise.LeRg1PRB90

Table A-211 Uplink Noise For PRB91 counters

5620 SAM GUI name	eNodeB 3GPP name
Greater Than Range1 Lower Or Equal To Range2	VS.ULNoise.GtRg1LeRg2PRB91
Greater Than Range2 Lower Or Equal To Range3	VS.ULNoise.GtRg2LeRg3PRB91
Greater Than Range3 Lower Or Equal To Range4	VS.ULNoise.GtRg3LeRg4PRB91
Greater Than Range4	VS.ULNoise.GtRg4PRB91
Lower Or Equal To Range1	VS.ULNoise.LeRg1PRB91

Table A-212 Uplink Noise For PRB92 counters

5620 SAM GUI name	eNodeB 3GPP name
Greater Than Range1 Lower Or Equal To Range2	VS.ULNoise.GtRg1LeRg2PRB92
Greater Than Range2 Lower Or Equal To Range3	VS.ULNoise.GtRg2LeRg3PRB92
Greater Than Range3 Lower Or Equal To Range4	VS.ULNoise.GtRg3LeRg4PRB92
Greater Than Range4	VS.ULNoise.GtRg4PRB92
Lower Or Equal To Range1	VS.ULNoise.LeRg1PRB92

Table A-213 Uplink Noise For PRB93 counters

5620 SAM GUI name	eNodeB 3GPP name
Greater Than Range1 Lower Or Equal To Range2	VS.ULNoise.GtRg1LeRg2PRB93
Greater Than Range2 Lower Or Equal To Range3	VS.ULNoise.GtRg2LeRg3PRB93
Greater Than Range3 Lower Or Equal To Range4	VS.ULNoise.GtRg3LeRg4PRB93
Greater Than Range4	VS.ULNoise.GtRg4PRB93
Lower Or Equal To Range1	VS.ULNoise.LeRg1PRB93

Table A-214 Uplink Noise For PRB94 counters

5620 SAM GUI name	eNodeB 3GPP name
Greater Than Range1 Lower Or Equal To Range2	VS.ULNoise.GtRg1LeRg2PRB94
Greater Than Range2 Lower Or Equal To Range3	VS.ULNoise.GtRg2LeRg3PRB94
Greater Than Range3 Lower Or Equal To Range4	VS.ULNoise.GtRg3LeRg4PRB94
Greater Than Range4	VS.ULNoise.GtRg4PRB94
Lower Or Equal To Range1	VS.ULNoise.LeRg1PRB94

Table A-215 Uplink Noise For PRB95 counters

5620 SAM GUI name	eNodeB 3GPP name
Greater Than Range1 Lower Or Equal To Range2	VS.ULNoise.GtRg1LeRg2PRB95
Greater Than Range2 Lower Or Equal To Range3	VS.ULNoise.GtRg2LeRg3PRB95
Greater Than Range3 Lower Or Equal To Range4	VS.ULNoise.GtRg3LeRg4PRB95
Greater Than Range4	VS.ULNoise.GtRg4PRB95
Lower Or Equal To Range1	VS.ULNoise.LeRg1PRB95

Table A-216 Uplink Noise For PRB96 counters

5620 SAM GUI name	eNodeB 3GPP name
Greater Than Range1 Lower Or Equal To Range2	VS.ULNoise.GtRg1LeRg2PRB96
Greater Than Range2 Lower Or Equal To Range3	VS.ULNoise.GtRg2LeRg3PRB96
Greater Than Range3 Lower Or Equal To Range4	VS.ULNoise.GtRg3LeRg4PRB96
Greater Than Range4	VS.ULNoise.GtRg4PRB96
Lower Or Equal To Range1	VS.ULNoise.LeRg1PRB96

Table A-217 Uplink Noise For PRB97 counters

5620 SAM GUI name	eNodeB 3GPP name
Greater Than Range1 Lower Or Equal To Range2	VS.ULNoise.GtRg1LeRg2PRB97
Greater Than Range2 Lower Or Equal To Range3	VS.ULNoise.GtRg2LeRg3PRB97
Greater Than Range3 Lower Or Equal To Range4	VS.ULNoise.GtRg3LeRg4PRB97
Greater Than Range4	VS.ULNoise.GtRg4PRB97
Lower Or Equal To Range1	VS.ULNoise.LeRg1PRB97

Table A-218 Uplink Noise For PRB98 counters

5620 SAM GUI name	eNodeB 3GPP name
Greater Than Range1 Lower Or Equal To Range2	VS.ULNoise.GtRg1LeRg2PRB98
Greater Than Range2 Lower Or Equal To Range3	VS.ULNoise.GtRg2LeRg3PRB98
Greater Than Range3 Lower Or Equal To Range4	VS.ULNoise.GtRg3LeRg4PRB98
Greater Than Range4	VS.ULNoise.GtRg4PRB98
Lower Or Equal To Range1	VS.ULNoise.LeRg1PRB98

Table A-219 Uplink Noise For PRB99 counters

5620 SAM GUI name	eNodeB 3GPP name
Greater Than Range1 Lower Or Equal To Range2	VS.ULNoise.GtRg1LeRg2PRB99
Greater Than Range2 Lower Or Equal To Range3	VS.ULNoise.GtRg2LeRg3PRB99
Greater Than Range3 Lower Or Equal To Range4	VS.ULNoise.GtRg3LeRg4PRB99
Greater Than Range4	VS.ULNoise.GtRg4PRB99
Lower Or Equal To Range1	VS.ULNoise.LeRg1PRB99

Table A-220 Uplink Noise For PRB9 counters

5620 SAM GUI name	eNodeB 3GPP name
Greater Than Range1 Lower Or Equal To Range2	VS.ULNoise.GtRg1LeRg2PRB9
Greater Than Range2 Lower Or Equal To Range3	VS.ULNoise.GtRg2LeRg3PRB9
Greater Than Range3 Lower Or Equal To Range4	VS.ULNoise.GtRg3LeRg4PRB9
Greater Than Range4	VS.ULNoise.GtRg4PRB9
Lower Or Equal To Range1	VS.ULNoise.LeRg1PRB9

Table A-221 Uplink Noise For PRB9 counters

5620 SAM GUI name	eNodeB 3GPP name
UL Noise Per PRB Group Gt Rg 1 Le Rg 2PR Bg 9	VS.ULNoisePerPRBGroup.GtRg1LeRg2PRBg9
UL Noise Per PRB Group Gt Rg 2 Le Rg 3PR Bg 9	VS.ULNoisePerPRBGroup.GtRg2LeRg3PRBg9
UL Noise Per PRB Group Gt Rg 3 Le Rg 4PR Bg 9	VS.ULNoisePerPRBGroup.GtRg3LeRg4PRBg9
UL Noise Per PRB Group Gt Rg 4PR Bg 9	VS.ULNoisePerPRBGroup.GtRg4PRBg9
UL Noise Per PRB Group Le Rg 1PR Bg 9	VS.ULNoisePerPRBGroup.LeRg1PRBg9

Table A-222 Uplink Paired Grants per TTI Stats counters

5620 SAM GUI name	eNodeB 3GPP name
UL Paired Grant 0 Grant	VS.ULPairedGrant.0Grant
UL Paired Grant 1 Grants	VS.ULPairedGrant.1Grants
UL Paired Grant 2 Grants	VS.ULPairedGrant.2Grants

Table A-223 VoIP downlink FER Stats counters

5620 SAM GUI name	eNodeB 3GPP name
Vo IPDLFERGT Range 1 Le Range 2	VS.VoIPDLFER.GTRange1LeRange2
Vo IPDLFERGT Range 2 Le Range 3	VS.VoIPDLFER.GTRange2LeRange3
Vo IPDLFERGT Range 3 Le Range 4	VS.VoIPDLFER.GTRange3LeRange4
Vo IPDLFERGT Range 4	VS.VoIPDLFER.GTRange4
Vo IPDLFER Le Range 1	VS.VoIPDLFER.LeRange1

Table A-224 VoIP downlink FER Stats counters

5620 SAM GUI name	eNodeB 3GPP name
Vo IPDLFERGT Range 1 Le Range 2	VS.VoIPDLFER.GTRange1LeRange2
Vo IPDLFERGT Range 2 Le Range 3	VS.VoIPDLFER.GTRange2LeRange3
Vo IPDLFERGT Range 3 Le Range 4	VS.VoIPDLFER.GTRange3LeRange4
Vo IPDLFERGT Range 4	VS.VoIPDLFER.GTRange4
Vo IPDLFER Le Range 1	VS.VoIPDLFER.LeRange1

Table A-225 Wideband CQI Reported in Tx Diversity Stats counters

5620 SAM GUI name	eNodeB 3GPP name
Layer 0 Tx Div WB Cqi Reported Cqi 0	VS.Layer0TxDivWBCqiReported.Cqi0
Layer 0 Tx Div WB Cqi Reported Cqi 1	VS.Layer0TxDivWBCqiReported.Cqi1
Layer 0 Tx Div WB Cqi Reported Cqi 10	VS.Layer0TxDivWBCqiReported.Cqi10
Layer 0 Tx Div WB Cqi Reported Cqi 11	VS.Layer0TxDivWBCqiReported.Cqi11
Layer 0 Tx Div WB Cqi Reported Cqi 12	VS.Layer0TxDivWBCqiReported.Cqi12
Layer 0 Tx Div WB Cqi Reported Cqi 13	VS.Layer0TxDivWBCqiReported.Cqi13
Layer 0 Tx Div WB Cqi Reported Cqi 14	VS.Layer0TxDivWBCqiReported.Cqi14
Layer 0 Tx Div WB Cqi Reported Cqi 15	VS.Layer0TxDivWBCqiReported.Cqi15
Layer 0 Tx Div WB Cqi Reported Cqi 2	VS.Layer0TxDivWBCqiReported.Cqi2
Layer 0 Tx Div WB Cqi Reported Cqi 3	VS.Layer0TxDivWBCqiReported.Cqi3
Layer 0 Tx Div WB Cqi Reported Cqi 4	VS.Layer0TxDivWBCqiReported.Cqi4
Layer 0 Tx Div WB Cqi Reported Cqi 5	VS.Layer0TxDivWBCqiReported.Cqi5
Layer 0 Tx Div WB Cqi Reported Cqi 6	VS.Layer0TxDivWBCqiReported.Cqi6
Layer 0 Tx Div WB Cqi Reported Cqi 7	VS.Layer0TxDivWBCqiReported.Cqi7
Layer 0 Tx Div WB Cqi Reported Cqi 8	VS.Layer0TxDivWBCqiReported.Cqi8
Layer 0 Tx Div WB Cqi Reported Cqi 9	VS.Layer0TxDivWBCqiReported.Cqi9

Table A-226 X2 SCTP Traffic Stats counters

5620 SAM GUI name	eNodeB 3GPP name
X 2 Sctp In Octets	VS.X2SctpInOctets
X 2 Sctp In Packets	VS.X2SctpInPackets
X 2 Sctp Out Octets	VS.X2SctpOutOctets
X 2 Sctp Out Packets	VS.X2SctpOutPackets

A.2 eNodeB interface statistics

This section describes the interface statistics counters for all supported versions of the eNodeB. Table A-227 lists the statistics classes.

Table A-227 Statistics packages and counter tables

Package name	See
equipment	Table A-228

Table A-228 equipment statistics

5620 SAM counter name	Type	MIB counter name	Description
InterfaceStats MIB table name: IF-MIB.ifTable Monitored classes: equipment.PhysicalPort; equipment.ManagementPort; lag.Interface; bundle.Interface; sonetequipment.Sts1Channel; sonetequipment.Sts3Channel; sonetequipment.Sts12Channel; sonetequipment.Sts48Channel; sonetequipment.Sts192Channel; tdmequipment.DS3E3Channel; tdmequipment.DS1E1Channel; tdmequipment.DS0ChannelGroup; ccag.CcagPathCcNetSap; ccag.CcagPathCcSapNet; ccag.CcagPathCcSapSap; sonetequipment.Tu3Channel; sonetequipment.TributaryChannel			
outboundBadPackets	long	ifOutErrors	For packet-oriented interfaces, the number of outbound packets that could not be transmitted because of errors. For character-oriented or fixed-length interfaces, the number of outbound transmission units that could not be transmitted because of errors. Discontinuities in the value of this counter can occur at re-initialization of the management system, and at other times as indicated by the value of ifCounterDiscontinuityTime.

(1 of 3)

5620 SAM counter name	Type	MIB counter name	Description
outboundPacketsDiscarded	long	ifOutDiscards	The number of outbound packets which were chosen to be discarded even though no errors had been detected to prevent their being transmitted. One possible reason for discarding such a packet could be to free up buffer space. Discontinuities in the value of this counter can occur at re-initialization of the management system, and at other times as indicated by the value of ifCounterDiscontinuityTime.
receivedBadPackets	long	ifInErrors	For packet-oriented interfaces, the number of inbound packets that contained errors preventing them from being deliverable to a higher-layer protocol. For character- oriented or fixed-length interfaces, the number of inbound transmission units that contained errors preventing them from being deliverable to a higher-layer protocol. Discontinuities in the value of this counter can occur at re-initialization of the management system, and at other times as indicated by the value of ifCounterDiscontinuityTime.
receivedOctets	long	ifInOctets	The total number of octets received on the interface, including framing characters. Discontinuities in the value of this counter can occur at re-initialization of the management system, and at other times as indicated by the value of ifCounterDiscontinuityTime.
receivedPacketsDiscarded	long	ifInDiscards	The number of inbound packets which were chosen to be discarded even though no errors had been detected to prevent their being deliverable to a higher-layer protocol. One possible reason for discarding such a packet could be to free up buffer space. Discontinuities in the value of this counter can occur at re-initialization of the management system, and at other times as indicated by the value of ifCounterDiscontinuityTime.
receivedUnicastPackets	long	ifInUcastPkts	The number of packets, delivered by this sub-layer to a higher (sub-)layer, which were not addressed to a multicast or broadcast address at this sub-layer. Discontinuities in the value of this counter can occur at re-initialization of the management system, and at other times as indicated by the value of ifCounterDiscontinuityTime.

(2 of 3)

5620 SAM counter name	Type	MIB counter name	Description
receivedUnknownProtocolPackets	long	ifInUnknownProtos	For packet-oriented interfaces, the number of packets received via the interface which were discarded because of an unknown or unsupported protocol. For character-oriented or fixed-length interfaces that support protocol multiplexing the number of transmission units received via the interface which were discarded because of an unknown or unsupported protocol. For any interface that does not support protocol multiplexing, this counter will always be 0. Discontinuities in the value of this counter can occur at re-initialization of the management system, and at other times as indicated by the value of ifCounterDiscontinuityTime.
transmittedOctets	long	ifOutOctets	The total number of octets transmitted out of the interface, including framing characters. Discontinuities in the value of this counter can occur at re-initialization of the management system, and at other times as indicated by the value of ifCounterDiscontinuityTime.
transmittedUnicastPackets	long	ifOutUcastPkts	The total number of packets that higher-level protocols requested be transmitted, and which were not addressed to a multicast or broadcast address at this sub-layer, including those that were discarded or not sent. Discontinuities in the value of this counter can occur at re-initialization of the management system, and at other times as indicated by the value of ifCounterDiscontinuityTime.

(3 of 3)

Customer documentation and product support

Customer documentation

http://www.alcatel-lucent.com/myaccess

Product manuals and documentation updates are available at alcatel-lucent.com. If you are a new user and require access to this service, please contact your Alcatel-Lucent sales representative.

Technical Support

http://support.alcatel-lucent.com

Documentation feedback

documentation.feedback@alcatel-lucent.com

© 2011 Alcatel-Lucent. All rights reserved.

3HE 06506 AAAB TQZZA Edition 01