Alcatel-Lucent 5620

SERVICE AWARE MANAGER | RELEASE 9.0 R2

SYSTEM ARCHITECTURE GUIDE

3HE 06500 AAAB TQZZA Edition 01

Alcatel-Lucent Proprietary
This document contains proprietary information of Alcatel-Lucent and is not to be disclosed or used except in accordance with applicable agreements.
Copyright 2011 © Alcatel-Lucent. All rights reserved.

Alcatel-Lucent assumes no responsibility for the accuracy of the information presented, which is subject to change without notice.

Alcatel, Lucent, Alcatel-Lucent, the Alcatel-Lucent logo, and TiMetra are registered trademarks of Alcatel-Lucent. All other trademarks are the property of their respective owners.

Copyright 2011 Alcatel-Lucent.
All rights reserved.

Disclaimers

Alcatel-Lucent products are intended for commercial uses. Without the appropriate network design engineering, they must not be sold, licensed or otherwise distributed for use in any hazardous environments requiring fail-safe performance, such as in the operation of nuclear facilities, aircraft navigation or communication systems, air traffic control, direct life-support machines, or weapons systems, in which the failure of products could lead directly to death, personal injury, or severe physical or environmental damage. The customer hereby agrees that the use, sale, license or other distribution of the products for any such application without the prior written consent of Alcatel-Lucent, shall be at the customer's sole risk. The customer hereby agrees to defend and hold Alcatel-Lucent harmless from any claims for loss, cost, damage, expense or liability that may arise out of or in connection with the use, sale, license or other distribution of the products in such applications.

This document may contain information regarding the use and installation of non-Alcatel-Lucent products. Please note that this information is provided as a courtesy to assist you. While Alcatel-Lucent tries to ensure that this information accurately reflects information provided by the supplier, please refer to the materials provided with any non-Alcatel-Lucent product and contact the supplier for confirmation. Alcatel-Lucent assumes no responsibility or liability for incorrect or incomplete information provided about non-Alcatel-Lucent products.

However, this does not constitute a representation or warranty. The warranties provided for Alcatel-Lucent products, if any, are set forth in contractual documentation entered into by Alcatel-Lucent and its customers.

This document was originally written in English. If there is any conflict or inconsistency between the English version and any other version of a document, the English version shall prevail.

When printed by Alcatel-Lucent, this document is printed on recycled paper.

Alcatel-Lucent License Agreement

SAMPLE END USER LICENSE AGREEMENT

1. LICENSE

1.1 Subject to the terms and conditions of this Agreement, Alcatel-Lucent grants to Customer and Customer accepts a nonexclusive, nontransferable license to use any software and related documentation provided by Alcatel-Lucent pursuant to this Agreement ("Licensed Program") for Customer's own internal use, solely in conjunction with hardware supplied or approved by Alcatel-Lucent. In case of equipment failure, Customer may use the Licensed Program on a backup system, but only for such limited time as is required to rectify the failure.

1.2 Customer acknowledges that Alcatel-Lucent may have encoded within the Licensed Program optional functionality and capacity (including, but not limited to, the number of equivalent nodes, delegate workstations, paths and partitions), which may be increased upon the purchase of the applicable license extensions.

1.3 Use of the Licensed Program may be subject to the issuance of an application key, which shall be conveyed to the Customer in the form of a Supplement to this End User License Agreement. The purchase of a license extension may require the issuance of a new application key.

2. PROTECTION AND SECURITY OF LICENSED PROGRAMS

2.1 Customer acknowledges and agrees that the Licensed Program contains proprietary and confidential information of Alcatel-Lucent and its third party suppliers, and agrees to keep such information confidential. Customer shall not disclose the Licensed Program except to its employees having a need to know, and only after they have been advised of its confidential and proprietary nature and have agreed to protect same.

2.2 All rights, title and interest in and to the Licensed Program, other than those expressly granted to Customer herein, shall remain vested in Alcatel-Lucent or its third party suppliers. Customer shall not, and shall prevent others from copying, translating, modifying, creating derivative works, reverse engineering, decompiling, encumbering or otherwise using the Licensed Program except as specifically authorized under this Agreement. Notwithstanding the foregoing, Customer is authorized to make one copy for its archival purposes only. All appropriate copyright and other proprietary notices and legends shall be placed on all Licensed Programs supplied by Alcatel-Lucent, and Customer shall maintain and reproduce such notices on any full or partial copies made by it.

3. TERM

3.1 This Agreement shall become effective for each Licensed Program upon delivery of the Licensed Program to Customer.

3.2 Alcatel-Lucent may terminate this Agreement: (a) upon notice to Customer if any amount payable to Alcatel-Lucent is not paid within thirty (30) days of the date on which payment is due; (b) if Customer becomes bankrupt, makes an assignment for the benefit of its creditors, or if its assets vest or become subject to the rights of any trustee, receiver or other administrator; (c) if bankruptcy, reorganization or insolvency proceedings are instituted against Customer and not dismissed within 15 days; or (d) if Customer breaches a material provision of this Agreement and such breach is not rectified within 15 days of receipt of notice of the breach from Alcatel-Lucent.

3.3 Upon termination of this Agreement, Customer shall return or destroy all copies of the Licensed Program. All obligations of Customer arising prior to termination, and those obligations relating to confidentiality and nonuse, shall survive termination.

4. CHARGES

4.1 Upon shipment of the Licensed Program, Alcatel-Lucent will invoice Customer for all fees, and any taxes, duties and other charges. Customer will be invoiced for any license extensions upon delivery of the new software application key or, if a new application key is not required, upon delivery of the extension. All amounts shall be due and payable within thirty (30) days of receipt of invoice, and interest will be charged on any overdue amounts at the rate of 1 1/2% per month (19.6% per annum).

5. SUPPORT AND UPGRADES

5.1 Customer shall receive software support and upgrades for the Licensed Program only to the extent provided for in the applicable Alcatel-Lucent software support policy in effect from time to time, and upon payment of any applicable fees. Unless expressly excluded, this Agreement shall be deemed to apply to all updates, upgrades, revisions, enhancements and other software which may be supplied by Alcatel-Lucent to Customer from time to time.

6. WARRANTIES AND INDEMNIFICATION

6.1 Alcatel-Lucent warrants that the Licensed Program as originally delivered to Customer will function substantially in accordance with the functional description set out in the associated user documentation for a period of 90 days from the date of shipment, when used in accordance with the user documentation. Alcatel-Lucent's sole liability and Customer's sole remedy for a breach of this warranty shall be Alcatel-Lucent's good faith efforts to rectify the nonconformity or, if after repeated efforts Alcatel-Lucent is unable to rectify the nonconformity, Alcatel-Lucent shall accept return of the Licensed Program and shall refund to Customer all amounts paid in respect thereof. This warranty is available only once in respect of each Licensed Program, and is not renewed by the payment of an extension charge or upgrade fee.

6.2 ALCATEL-LUCENT EXPRESSLY DISCLAIMS ALL OTHER WARRANTIES, REPRESENTATIONS, COVENANTS OR CONDITIONS OF ANY KIND, WHETHER EXPRESS OR IMPLIED, INCLUDING WITHOUT LIMITATION, WARRANTIES OR REPRESENTATIONS OF WORKMANSHIP, MERCHANTABILITY, FITNESS FOR A PARTICULAR PURPOSE, DURABILITY, OR THAT THE OPERATION OF THE LICENSED PROGRAM WILL BE ERROR FREE OR THAT THE LICENSED PROGRAMS WILL NOT INFRINGE UPON ANY THIRD PARTY RIGHTS.

6.3 Alcatel-Lucent shall defend and indemnify Customer in any action to the extent that it is based on a claim that the Licensed Program furnished by Alcatel-Lucent infringes any patent, copyright, trade secret or other intellectual property right, provided that Customer notifies Alcatel-Lucent within ten (10) days of the existence of the claim, gives Alcatel-Lucent sole control of the litigation or settlement of the claim, and provides all such assistance as Alcatel-Lucent may reasonably require. Notwithstanding the foregoing, Alcatel-Lucent shall have no liability if the claim results from any modification or unauthorized use of the Licensed Program by Customer, and Customer shall defend and indemnify Alcatel-Lucent against any such claim.

6.4 Alcatel-Lucent Products are intended for standard commercial uses. Without the appropriate network design engineering, they must not be sold, licensed or otherwise distributed for use in any hazardous environments requiring fail safe performance, such as in the operation of nuclear facilities, aircraft navigation or communication systems, air traffic control, direct life-support machines, or weapons systems, in which the failure of products could lead directly to death, personal injury, or severe physical or environmental damage. The Customer hereby agrees that the use, sale, license or other distribution of the Products for any such application without the prior written consent of Alcatel-Lucent, shall be at the Customer's sole risk. The Customer also agrees to defend and hold Alcatel-Lucent harmless from any claims for loss, cost, damage, expense or liability that may arise out of or in connection with the use, sale, license or other distribution of the Products in such applications.

7. LIMITATION OF LIABILITY

7.1 IN NO EVENT SHALL THE TOTAL COLLECTIVE LIABILITY OF ALCATEL-LUCENT, ITS EMPLOYEES, DIRECTORS, OFFICERS OR AGENTS FOR ANY CLAIM, REGARDLESS OF VALUE OR NATURE, EXCEED THE AMOUNT PAID UNDER THIS AGREEMENT FOR THE LICENSED PROGRAM THAT IS THE SUBJECT MATTER OF THE CLAIM. IN NO EVENT SHALL THE TOTAL COLLECTIVE LIABILITY OF ALCATEL-LUCENT, ITS EMPLOYEES, DIRECTORS, OFFICERS OR AGENTS FOR ALL CLAIMS EXCEED THE TOTAL AMOUNT PAID BY CUSTOMER TO ALCATEL-LUCENT HEREUNDER. NO PARTY SHALL BE LIABLE FOR ANY INDIRECT, SPECIAL OR CONSEQUENTIAL DAMAGES, WHETHER OR NOT SUCH DAMAGES ARE FORESEEABLE, AND/OR THE PARTY HAD BEEN ADVISED OF THE POSSIBILITY OF SUCH DAMAGES.

7.2 The foregoing provision limiting the liability of Alcatel-Lucent's employees, agents, officers and directors shall be deemed to be a trust provision, and shall be enforceable by such employees, agents, officers and directors as trust beneficiaries.

8. GENERAL

8.1 Under no circumstances shall either party be liable to the other for any failure to perform its obligations (other than the payment of any monies owing) where such failure results from causes beyond that party's reasonable control.

8.2 This Agreement constitutes the entire agreement between Alcatel-Lucent and Customer and supersedes all prior oral and written communications. All amendments shall be in writing and signed by authorized representatives of both parties.

8.3 If any provision of this Agreement is held to be invalid, illegal or unenforceable, it shall be severed and the remaining provisions shall continue in full force and effect.

8.4 The Licensed Program may contain freeware or shareware obtained by Alcatel-Lucent from a third party source. No license fee has been paid by Alcatel-Lucent for the inclusion of any such freeware or shareware, and no license fee is charged to Customer for its use. The Customer agrees to be bound by any license agreement for such freeware or shareware. CUSTOMER ACKNOWLEDGES AND AGREES THAT THE THIRD PARTY SOURCE PROVIDES NO WARRANTIES AND SHALL HAVE NO LIABILITY WHATSOEVER IN RESPECT OF CUSTOMER'S POSSESSION AND/OR USE OF THE FREEWARE OR SHAREWARE.

8.5 Alcatel-Lucent shall have the right, at its own expense and upon reasonable written notice to Customer, to periodically inspect Customer's premises and such documents as it may reasonably require, for the exclusive purpose of verifying Customer's compliance with its obligations under this Agreement.

8.6 All notices shall be sent to the parties at the addresses listed above, or to any such address as may be specified from time to time. Notices shall be deemed to have been received five days after deposit with a post office when sent by registered or certified mail, postage prepaid and receipt requested.

8.7 If the Licensed Program is being acquired by or on behalf of any unit or agency of the United States Government, the following provision shall apply: If the Licensed Program is supplied to the Department of Defense, it shall be classified as "Commercial Computer Software" and the United States Government is acquiring only "restricted rights" in the Licensed Program as defined in DFARS 227-7202-1(a) and 227.7202-3(a), or equivalent. If the Licensed Program is supplied to any other unit or agency of the United States Government, rights will be defined in Clause 52.227-19 or 52.227-14 of the FAR, or if acquired by NASA, Clause 18-52.227-86(d) of the NASA Supplement to the FAR, or equivalent. If the software was acquired under a contract subject to the October 1988 Rights in Technical Data and Computer Software regulations, use, duplication and disclosure by the Government is subject to the restrictions set forth in DFARS 252-227.7013(c)(1)(ii) 1988, or equivalent.

8.8 Customer shall comply with all export regulations pertaining to the Licensed Program in effect from time to time. Without limiting the generality of the foregoing, Customer expressly warrants that it will not directly or indirectly export, reexport, or transship the Licensed Program in violation of any export laws, rules or regulations of Canada, the United States or the United Kingdom.

8.9 No term or provision of this Agreement shall be deemed waived and no breach excused unless such waiver or consent is in writing and signed by the party claimed to have waived or consented. The waiver by either party of any right hereunder, or of the failure to perform or of a breach by the other party, shall not be deemed to be a waiver of any other right hereunder or of any other breach or failure by such other party, whether of a similar nature or otherwise.

8.10 This Agreement shall be governed by and construed in accordance with the laws of the Province of Ontario. The application of the United Nations Convention on Contracts for the International Sale of Goods is hereby expressly excluded.

Preface

The Preface provides general information about the 5620 Service Aware Manager documentation suite.

Note — You can use the Search function of Acrobat Reader (File→Search) to find a term in a PDF of this document. To refine your search, use appropriate search options (for example, search for whole words only or enable case-sensitive searching). You can also search for a term in multiple PDFs at once. For more information, see the Help for Acrobat Reader.

5620 SAM documentation suite

The 5620 SAM documentation suite describes the 5620 SAM and the associated network management of its supported devices. Contact your Alcatel-Lucent support representative for information about specific network or facility considerations.

Table 1 lists the documents in the 5620 SAM documentation suite.

Table 1 5620 SAM customer documentation suite

Guide	Description
5620 SAM core documentation	
5620 SAM Planning Guide	The *5620 SAM Planning Guide* provides information about 5620 SAM scalability and recommended hardware configurations.

(1 of 4)

Guide	Description
5620 SAM | 5650 CPAM Installation and Upgrade Guide	The *5620 SAM | 5650 CPAM Installation and Upgrade Guide* provides OS considerations, configuration information, and procedures for the following: • installing, upgrading, and uninstalling 5620 SAM and 5650 CPAM software in standalone and redundant deployments • 5620 SAM system migration to a different system • conversion from a standalone to a redundant 5620 SAM system
5620 SAM User Guide	The *5620 SAM User Guide* provides information about using the 5620 SAM to manage the service-aware IP/MPLS network, including GUI basics, commissioning, service configuration, and policy management. The *5620 SAM User Guide* uses a task-based format. Each chapter contains: • a workflow that describes the steps for configuring and using the functionality • detailed procedures that list the configurable parameters on the associated forms 5620 SAM management information specific to LTE network elements is covered in the *5620 SAM LTE ePC User Guide* and *5620 SAM LTE RAN User Guide*. 5620 SAM management information specific to 1830 PSS network elements is covered in the *5620 SAM Optical User Guide*.
5620 SAM Parameter Guide	The *5620 SAM Parameter Guide* provides: • parameter descriptions that include value ranges and default values • parameter options and option descriptions • parameter and option dependencies • parameter mappings to the 5620 SAM-O XML equivalent property names There are dynamic links between the procedures in the *5620 SAM User Guide* and the parameter descriptions in the *5620 SAM Parameter Guide*. See Procedure 2 for more information. Parameters specific to LTE network elements are covered in the *5620 SAM LTE Parameter Reference*. Parameters specific to 1830 PSS network elements are covered in the *5620 SAM Optical Parameter Reference*.
5620 SAM Statistics Management Guide	The *5620 SAM Statistics Management Guide* provides information about how to configure performance and accounting statistics collection and how to view counters using the 5620 SAM. Network examples are included.
5620 SAM Scripts and Templates Developer Guide	The *5620 SAM Scripts and Templates Developer Guide* provides information that allows you to develop, manage, and execute CLI-based or XML-based scripts or templates. The guide is intended for developers, skilled administrators, and operators who are expected to be familiar with the following: • CLI scripting, XML, and the Velocity engine • basic scripting or programming • 5620 SAM functions

5620 SAM Troubleshooting Guide	The *5620 SAM Troubleshooting Guide* provides task-based procedures and user documentation to:
	• help resolve issues in the managed and management networks
	• identify the root cause and plan corrective action for:
	  • alarm conditions on a network object or customer service
	  • problems on customer services with no associated alarms
	• list problem scenarios, possible solutions, and tools to help check:
	  • network management LANs
	  • network management platforms and operating systems
	  • 5620 SAM client GUIs and client OSS applications
	  • 5620 SAM servers
	  • 5620 SAM databases

(2 of 4)

Guide	Description
5620 SAM Maintenance Guide	The *5620 SAM Maintenance Guide* provides procedures for: • generating baseline information for 5620 SAM applications • performing daily, weekly, monthly, and as-required maintenance activities for 5620 SAM-managed networks
5620 SAM Integration Guide	The *5620 SAM Integration Guide* provides procedures to allow the 5620 SAM to integrate with additional components.
5620 SAM System Architecture Guide	The *5620 SAM System Architecture Guide* is intended for technology officers and network planners to increase their knowledge of the 5620 SAM software structure and components. It describes the system structure, software components, and interfaces of the 5620 SAM. In addition, 5620 SAM fault tolerance, security, and network management capabilities are discussed from an architectural perspective.
5620 SAM Supervision Module User Guide	The *5620 SAM Supervision Module User Guide* provides information about how to configure and use the web-based 5620 SAM Supervision Module for fault management and at-a-glance network element monitoring.
5620 SAM Network Element Compatibility Guide	The *5620 SAM Network Element Compatibility Guide* provides release-specific information about the compatibility of managed device features in 5620 SAM releases.
5620 SAM Release Description	The *5620 SAM Release Description* provides information about the new features associated with a 5620 SAM software release.
5620 SAM Glossary	The *5620 SAM Glossary* defines terms and acronyms used in all of the 5620 SAM documentation, including 5620 SAM LTE documentation.
5620 SAM XML OSS Interface Developer Guide	The *5620 SAM XML OSS Interface Developer Guide* provides information that allows you to: • use the 5620 SAM XML OSS interface to access network management information • learn about the information model associated with the managed network • develop OSS applications using the packaged methods, classes, data types, and objects necessary to manage 5620 SAM functions
5620 SAM LTE documentation	
5620 SAM LTE ePC User Guide	The *5620 SAM LTE ePC User Guide* describes how to discover, configure, and manage LTE ePC devices using the 5620 SAM. The guide is intended for LTE ePC network planners, administrators, and operators. Alcatel-Lucent recommends that you review the entire *5620 SAM LTE ePC User Guide* before you attempt to use the 5620 SAM in your LTE network.
5620 SAM LTE RAN User Guide	The *5620 SAM LTE RAN User Guide* describes how to discover, configure, and manage the eNodeB using the 5620 SAM. The guide is intended for LTE RAN network planners, administrators, and operators. Alcatel-Lucent recommends that you review the entire *5620 SAM LTE RAN User Guide* before you attempt to use the 5620 SAM in your LTE network.
5620 SAM LTE Parameter Reference	The *5620 SAM LTE Parameter Reference* provides a list of all LTE ePC and LTE RAN parameters supported in the 5620 SAM.
5620 SAM LTE Alarm Reference	The *5620 SAM LTE Alarm Reference* provides a list of LTE ePC and LTE RAN alarms that can be reported in the 5620 SAM GUI.
5620 SAM 3GPP OSS Interface Developer Guide	The *5620 SAM 3GPP OSS Interface Developer Guide* describes the components and architecture of the 3GPP OSS interface to the 5620 SAM. It includes procedures and samples to assist OSS application developers to use the 3GPP interface to manage LTE devices.
5620 SAM 3GPP OSS Interface Compliance Statements	The *5620 SAM 3GPP OSS Interface Compliance Statements* document describes the compliance of the 5620 SAM 3GPP OSS interface with the 3GPP standard.
5620 SAM LTE RAN Release Description	The *5620 SAM LTE RAN Release Description* provides information about the LTE RAN features associated with the release.

(3 of 4)

Guide	Description
5620 SAM optical documentation	
5620 SAM Optical User Guide	The *5620 SAM Optical User Guide* describes how to discover, configure, and manage optical devices using the 5620 SAM. The guide is intended for optical network planners, administrators, and operators. Alcatel-Lucent recommends that you review the entire *5620 SAM Optical User Guide* before you attempt to use the 5620 SAM in your network.
5620 SAM Optical Parameter Reference	The *5620 SAM Optical Parameter Reference* provides a list of all optical device parameters supported in the 5620 SAM.
5620 SAM Optical Alarm Reference	The *5620 SAM Optical Alarm Reference* provides a list of optical device alarms that can be reported in the 5620 SAM GUI.

(4 of 4)

Procedure 1 To find the 5620 SAM user documentation

The user documentation is available from the following sources:

- the User_Documentation directory on the product DVD-ROM
- Help→5620 SAM User Documentation in the 5620 SAM client GUI main menu

Note — Users of Mozilla browsers may receive an error message when using the User Documentation Index page (index.html) to open the PDF files in the 5620 SAM documentation suite. The offline storage and default cache values used by the browsers are the cause of the error message.

Alcatel-Lucent recommends changing the offline storage (Mozilla Firefox) or cache (Mozilla 1.7) values to 100 Mbytes to eliminate the error message.

Procedure 2 To view parameter descriptions from the *5620 SAM User Guide*

You can click on a parameter name in a *5620 SAM User Guide* procedure to open the matching parameter description in the *5620 SAM Parameter Guide*. Ensure the following conditions are true beforehand:

- the *5620 SAM Parameter Guide* and *5620 SAM User Guide* are located in the same directory
- Adobe Reader Release 5.0 or later is installed

1. To view a parameter description when both the *5620 SAM User Guide* and the *5620 SAM Parameter Guide* are open in Adobe Acrobat, click on the parameter name in the *5620 SAM User Guide*.

   The parameter description is displayed in the *5620 SAM Parameter Guide*.

2. To view a parameter description when only the *5620 SAM User Guide* is open in Adobe Acrobat:

   i. Click on a parameter name in a procedure in the *5620 SAM User Guide*. The *5620 SAM User Guide* closes and the *5620 SAM Parameter Guide* opens to display the parameter description.

   ii. Double-click on the Previous View button in Adobe Acrobat (or press Alt + ←) to re-open the *5620 SAM User Guide*. The *5620 SAM User Guide* opens and displays the parameter from step i.

Prerequisites

Readers of the 5620 SAM documentation suite are assumed to be familiar with the following:

- 5620 SAM software structure and components
- 5620 SAM GUI operations and tools
- typical 5620 SAM management tasks and procedures
- device and network management concepts

Conventions

Table 2 lists the conventions that are used throughout the documentation.

Table 2 Documentation conventions

Convention	Description	Example
Key name	Press a keyboard key	Delete
Italics	Identifies a variable	*hostname*

(1 of 2)

Convention	Description	Example
Key+Key	Type the appropriate consecutive keystroke sequence	CTRL+G
Key–Key	Type the appropriate simultaneous keystroke sequence	CTRL–G
*	An asterisk is a wildcard character, which means “any character” in a search argument.	log_file*.txt
↵	Press the Return key	↵
—	An em dash indicates there is no information.	—
→	Indicates that a cascading submenu results from selecting a menu item	Policies→Alarm Policies

(2 of 2)

Procedures with options or substeps

When there are options in a procedure, they are identified by letters. When there are substeps in a procedure, they are identified by Roman numerals.

Example of options in a procedure

At step 1, you can choose option a or b. At step 2, you must do what the step indicates.

1 This step offers two options. You must choose one of the following.

- **a** This is one option.
- **b** This is another option.

2 You must perform this step.

Example of substeps in a procedure

At step 1, you must perform a series of substeps within a step. At step 2, you must do what the step indicates.

1 This step has a series of substeps that you must perform to complete the step. You must perform the following substeps.

- **i** This is the first substep.
- **ii** This is the second substep.
- **iii** This is the third substep.

2 You must perform this step.

Measurement conventions

Measurements in this document are expressed in metric units and follow the Système international d’unités (SI) standard for abbreviation of metric units. If imperial measurements are included, they appear in brackets following the metric unit.

Table 3 lists the measurement symbols used in this document.

Table 3 Bits and bytes conventions

Measurement	Symbol
bit	b
byte	byte
kilobits per second	kb/s

Important information

The following conventions are used to indicate important information:

Warning — Warning indicates that the described activity or situation may, or will, cause equipment damage or serious performance problems.

Caution — Caution indicates that the described activity or situation may, or will, cause service interruption.

Note — Notes provide information that is, or may be, of special interest.

Contents

Preface **ix**

5620 SAM documentation suite ix
Procedure 1 To find the 5620 SAM user documentation xii
Procedure 2 To view parameter descriptions from the 5620 SAM User Guide xiii
Prerequisites xiii
Conventions xiii
Procedures with options or substeps xiv
Measurement conventions xiv
Important information xv

1 — 5620 SAM architecture **1-1**

1.1 5620 SAM architecture overview 1-2
Main features 1-2
1.2 5620 SAM components 1-2
Subcomponents 1-3
Multi-tier model 1-3
Server data model 1-4
Distributed server architecture 1-5
1.3 Network management capabilities 1-5
5620 SAM network-management functional areas 1-5
Service management 1-6
Billing 1-6
Equipment management 1-6
Performance management 1-6
Fault management 1-7
1.4 Component interfaces 1-7
Servers and managed devices 1-8
Main server and clients 1-8
Main server and database 1-9

Main server and auxiliary servers 1-9
5620 SAM integration with external systems 1-9
1.5 Security 1-10
Session management 1-11
Network transport security 1-12
1.6 Fault tolerance 1-13
Main server and database redundancy 1-13
1.7 Standards compliance 1-15

1 — 5620 SAM architecture

1.1 5620 SAM architecture overview *1-2*

1.2 5620 SAM components *1-2*

1.3 Network management capabilities *1-5*

1.4 Component interfaces *1-7*

1.5 Security *1-10*

1.6 Fault tolerance *1-13*

1.7 Standards compliance *1-15*

1.1 5620 SAM architecture overview

The 5620 SAM is a network-management application that is designed using industry standards that include the Java and J2EE framework, multi-tier layering, and web service, XML/SOAP and 3GPP interfaces. The use of industry-standard interfaces allows the 5620 SAM to interoperate with other network systems.

Main features

The main features of the 5620 SAM architecture include the following.

- the use of open standards that promote interoperation with other systems
- distributed server processing using auxiliary servers to spread the processing workload across multiple platform components to provide greater efficiency in the execution of network-management tasks
- a multi-tier model that groups functions in separate, well-defined elements that can be coded quickly, easily maintained, and combined with different vendor product components to provide flexibility for system growth
- web services that are created when applications export their XML interfaces over the web; this allows remote components such as web portals to access the services, and allows third-party vendors to create customized windows into 5620 SAM services
- component redundancy that provides a high degree of system fault tolerance

1.2 5620 SAM components

The following are the main components of a 5620 SAM system.

- The server is a Java-based network-management processing engine that runs on a Unix platform. A 5620 SAM server includes third-party components such as an application server, JMS server, web server, protocol stack set, and database adapter. Server functions can be concentrated on one physical platform, called a main server. Some server functions can be distributed across multiple dedicated stations called auxiliary servers.
- The database is a customized Oracle relational database that provides persistent storage for the network data. The database can run on the same station as a 5620 SAM main server, or on a different station.
- The Java-based 5620 SAM GUI clients provide a graphical interface for network operators. Client operation is supported on Unix and Microsoft Windows platforms.
- Platform-independent OSS clients can run on any platform, because they exchange platform-neutral messages with a 5620 SAM main server. The 5620 SAM supports the following kinds of OSS clients:
  - XML/SOAP clients that use the XML OSS interface to perform general 5620 SAM management functions
  - 3GPP OSS clients that use the CORBA-based 3GPP OSS interface to perform LTE management functions

Subcomponents

All licensed 5620 SAM subcomponents are listed in the following directory on a main server:

path/nms/distribution/licenses

where path is the 5620 SAM server installation location, typically /opt/5620sam/server

The following is a partial list of licensed subcomponents. See the README file that accompanies a subcomponent license for more information.

- Apache Software Foundation log4j
- Oracle JDK, Java, and JRE
- Oracle for Solaris and Oracle Enterprise
- Zero G Software InstallAnywhere
- yWorks yFile 2.6.1
- Jboss Application Server
- AXL Radius and TACACS+
- SL Corp SL-GMS
- Sourceforge ganymed-ssh2

Multi-tier model

The main 5620 SAM components are layered in a multi-tier framework. These components are built using Alcatel-Lucent and non-Alcatel-Lucent software. Figure 1-1 shows the 5620 SAM multi-tier model and the components in each layer.

Figure 1-1 5620 SAM multi-tier model

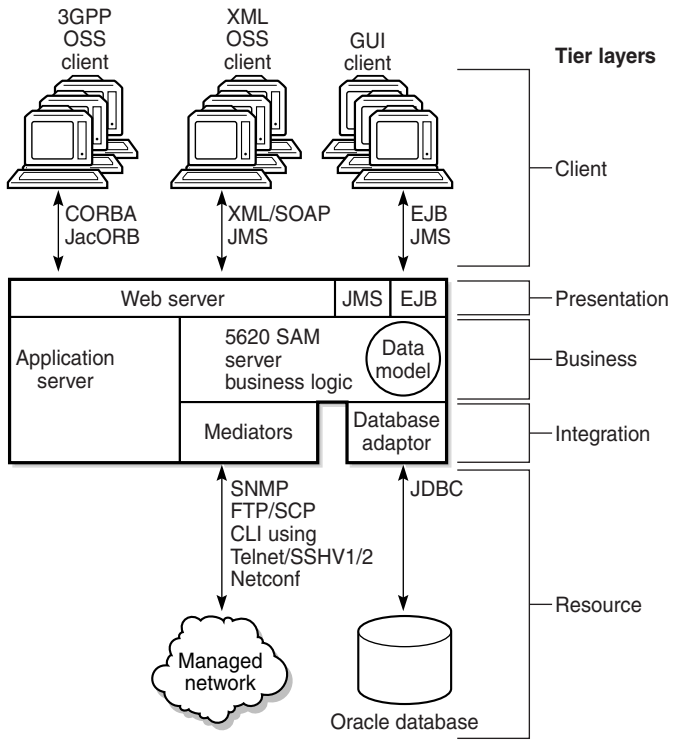

The layers perform the following functions:

- The resource layer describes external or legacy systems, which include the network of managed devices and the Oracle database. Managed devices are the resources that can be configured, controlled, and monitored by the 5620 SAM. The Oracle database contains the persistent storage for the data model, with data such as device configurations and statistics, as well as information about customer connections and services.
- The integration layer buffers resource-layer entities from the business layer. This layer contains the mediators, which communicate with equipment in the managed network, and the database adapter. The mediator components translate messages from the business layer into the SNMP, FTP, secure FTP, and CLI messages that are sent to the managed network. Messages that are received from the network are processed by the mediator components and passed to the business layer. The integration layer also contains the database adapter that decouples the Oracle database from the business logic. The database adapter code translates business logic requests into JDBC commands, and translates JDBC responses into the Java business model.
- The business layer contains the Java application logic and data model that drive 5620 SAM functions. The business logic processes input from client requests, managed network traps, and internal server events, and performs the appropriate actions on the managed network, clients, and internal data model. The server data model maintains information about network objects and their relationships. To support the business layer, an application server provides J2EE services.
- The presentation layer buffers the application logic from the client layer. This layer contains several components. The web server receives SOAP/XML messages from OSS clients and passes them to the business layer. The third-party application server handles EJB method invocations received from the 5620 SAM GUI clients on the network and returns the responses generated by the business-layer logic. The application server also forwards JMS asynchronous messages from the business layer to 5620 SAM clients for event notification.
- The client layer comprises the OSS, web-based, and 5620 SAM GUI clients. The 5620 SAM GUI client installation package contains a Java virtual machine and Java GUI components that send EJB remote method invocations to the 5620 SAM server. The OSS clients send XML/SOAP or CORBA messages to the 5620 SAM server. The web-based clients use JNLP for portal interfaces.

Server data model

The server data model is the framework for service-level functions. It represents the physical and logical elements of the network, such as equipment, customers, services, accounting data, and network performance statistics. The model also describes the relationships between these entities, thereby allowing users to perform network operations at the service level or customer level. This ability to associate entities in the network provides enhanced service capabilities and is crucial for managing complex multiservice networks.

The data model representation of the current state of the managed network is stored in the Oracle database. Changes to the model that are triggered from the network include event and data notifications such as network device fault traps or state changes. These updates are applied to the model, stored in the database, and reported to the client interfaces. Changes to the model that are triggered from clients include configuration or provisioning changes. These changes are applied to the model, stored in the database, and deployed to the network when appropriate.

Distributed server architecture

The 5620 SAM server functions can be distributed across multiple physical platforms in a standalone or redundant 5620 SAM configuration. A main server and one or more auxiliary servers in the same 5620 SAM domain define a 5620 SAM server cluster. A redundant 5620 SAM system has two clusters—one for each main server. The auxiliary servers are members of only the cluster that contains the current primary main server. When the main servers change roles, for example, after a server activity switch, the auxiliary servers leave the current cluster and join the one that contains the new primary main server.

The main server in a cluster is the network-management engine that processes GUI and OSS client requests and monitors the network elements. It also directs the operation of the auxiliary servers and distributes the processing load to them as required. This distributed framework is invisible to 5620 SAM GUI and OSS clients, because they interact only with the main server.

The main server sends new or updated operating information, for example, the 5620 SAM license capacity, redundancy status, and database credentials, to each auxiliary server as the information becomes available. It also sends the current topic name and associated JNDI and HAJNDI information, as required.

1.3 Network management capabilities

The 5620 SAM provides flexible network access that allows operators to interact with the network on a per-service or per-customer basis, or at the level of individual devices. The ability of the 5620 SAM to link customers, services, equipment, and faults provides the ability to efficiently manage a complex network by simplifying routine operations and allowing bulk provisioning.

The 5620 SAM creates a data model of the network that includes the relationships between customers, services, and equipment. The main and auxiliary servers collect data from managed devices and collate the data for billing, performance monitoring, troubleshooting, and inventory and alarm reporting at the service or customer level. The main server deploys user commands to the network and performs autonomous functions such as device discovery and backups.

5620 SAM network-management functional areas

The 5620 SAM features the following capabilities:

- alarm correlation up to the service level
- service and routing provisioning using policies and profiles to reduce the repetition of effort

- inventory reporting at the equipment, service, and customer levels using filtered views that can be saved as report files
- network performance and accounting data collection on a per-service or per-port basis using a flat-rate, destination, or usage schema
- troubleshooting at the service level, which includes viewing the associations between services and entities such as customers, equipment, and transport tunnels
- OSS interfaces that provide access to 5620 SAM functions from other systems

Service management

The service management capabilities of the 5620 SAM allow network operators to provision VLL, VPLS, IES, VPRN, and VLAN services for customers. These service networks can then be tracked for performance monitoring, billing, inventory, reporting, and alarms. You can track the managed network data from SNMP traps, billing and traffic analysis data, and SNMP MIB performance data. The data is rolled up and correlated using the server data model and server business logic.

The 5620 SAM allows the provisioning of service mirrors to monitor service traffic for troubleshooting or official surveillance purposes.

Billing

The 5620 SAM collects accounting statistics stored on managed devices for the creation of billing records and for traffic-analysis purposes. The statistics are transferred to the 5620 SAM servers using FTP or SCP.

Equipment management

A 5620 SAM main server maintains an equipment data model and deploys configuration updates to the managed devices. For example, when an 5620 SAM client operator adds a card to an NE, the server data model is updated to include the card, and the card provisioning and configuration commands are sent to the NE. New NEs can be discovered at operator request, or automatically. When a new NE is discovered, it is added to the data model and is in the Managed state.

Performance management

The 5620 SAM provides the ability to monitor services and resources using performance statistics, diagnostic tools and data validation; it raises a related alarm as appropriate. To protect against data loss, the 5620 SAM can perform scheduled backups of the 5620 SAM database and the managed-device configurations.

- The 5620 SAM collects performance statistics through polls of the managed devices. Managed devices use SNMP to upload network performance statistics data in the local MIBs to the 5620 SAM.
- The 5620 SAM diagnostic tools include MAC ping, VCCV ping for VLL services, DNS ping for name resolution, LSP ping and traceroute, and VPRN ping. Performing service and service-transport connectivity tests during service creation can ensure correct function at service activation time. Ping tests against management IP addresses indicate managed-device availability.

- The 5620 SAM compares the configuration information on managed devices with the information in the database to ensure information synchronization.
- The 5620 SAM can perform a scheduled backup of the 5620 SAM database and the managed device configuration files to a secure location.

Fault management

Fault management occurs in response to the SNMP traps sent by managed devices to the 5620 SAM. The 5620 SAM main server converts a trap to a status update and raises an alarm against the entity when appropriate. 5620 SAM GUI clients use visual and auditory signals to alert the operator to the arrival of an alarm.

Managed devices send SNMP traps to indicate a number of conditions that include configuration or operational-state changes, security breach attempts, and equipment faults. The traps are passed to clients immediately if they have registered for a JMS event channel, or later when the client polls the server.

1.4 Component interfaces

The 5620 SAM component interfaces use industry-standard protocols for communication between servers and the database, managed network devices, and clients, as shown in Figure 1-2.

Figure 1-2 5620 SAM interfaces

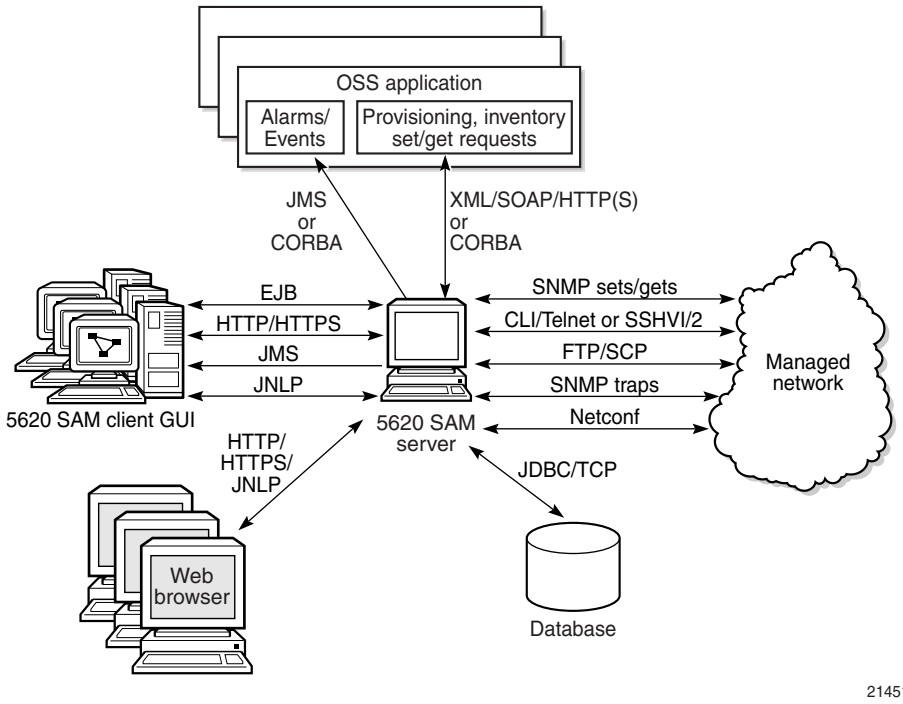

Servers and managed devices

5620 SAM main and auxiliary servers send messages to the managed network in the form of SNMP sets and gets, JDBC JMS messages, and FTP or SCP commands. A 5620 SAM main server also sends CLI commands using Telnet or SSH.

- 5620 SAM servers use SNMP to monitor and manage network performance, and to identify network problems. Main servers deploy configuration changes to the managed devices using SNMP. Auxiliary servers poll MIB performance statistics on the managed devices, and collect call-trace data for RAN. The managed devices use asynchronous SNMP messages called traps to notify the 5620 SAM main server of events.
- The CLI of a managed device is accessible through a 5620 SAM client using Telnet, SSHv1, or SSHv2. A 5620 SAM operator can use CLI commands to modify device configurations and to perform troubleshooting functions. An operator with the appropriate user-account privileges can gain access to a device CLI by sending messages to the 5620 SAM server, which serves as an intermediary between the network devices and clients.
- FTP and SCP are transport-layer protocols for transferring files between systems. The 5620 SAM uses these protocols for backing up managed device configuration data, collecting accounting statistics from the devices, and downloading software from the main server to devices.
- JMS is a subscription service that allows clients to receive event and alarm messages about the state of the managed network. It runs in a dedicated JVM on a main server.

Main server and clients

Client interfaces provide access to the 5620 SAM main server and to the managed network. Clients send requests to the 5620 SAM main server to view and change data objects in the data model and to perform network operations. An XML OSS client uses XML/SOAP messages, and a 3GPP OSS client uses CORBA IRPs. Each type of client can communicate over HTTP or HTTPS. A GUI client uses Java session bean invocations.

A 5620 SAM main server communicates with clients in the following ways:

- XML OSS client software developers create requests for processing by the 5620 SAM main server. Schema files provide the XML interface definitions for data objects. The schema files package related domain objects together, and describe the attributes and methods of each object. The JMS interface is also available for XML messaging. See the *5620 SAM-O OSS Interface Developer Guide* for more information about the contents of the schema files and the messaging between XML OSS clients and a 5620 SAM main server.
- 3GPP OSS client software developers create CORBA requests for processing by the 5620 SAM main server. IRPs provide the interface definitions for data objects. See the *5620 SAM 3GPP OSS Interface Developer Guide* for more information about the messaging between 3GPP OSS clients and a 5620 SAM main server.
- The 5620 SAM GUI clients send requests to the server EJB session beans using Java RMI.

- The 5620 SAM GUI auto-client update function uses HTTP or HTTPS for client software updates and file downloads.
- The 5620 SAM Supervision web portal uses HTTP or HTTPS for communication.
- The JMS and the XML publisher service run on the same physical station as a main server, but in separate JVMs. This reduces the stack size for a processing thread, and supports multiple simultaneous client connections.
- The 5620 SAM GUI and OSS clients use JMS channels to receive real-time network event information from the server. Clients must register a subscription or durable subscription using object messaging to set up a JMS channel. The received event types include:
  - managed network alarm notifications
  - managed network configuration changes
  - server activity-switch notifications
  - 5620 SAM database connectivity errors
- A web-based 5620 SAM GUI communicates through a web browser using JNLP.

Main server and database

A 5620 SAM main server communicates with a 5620 SAM database using a JDBC session over TCP. JDBC is a Java API for interworking with SQL relational databases.

Main server and auxiliary servers

Each 5620 SAM main server includes a mechanism for sending requests to auxiliary servers. A main-server functional area that uses this mechanism, for example, a statistics-collection scheduler, performs load balancing to equally distribute the requests among the available auxiliary servers. An auxiliary server notifies the main server after it finishes processing a request. If the main server fails to send a request or all available auxiliary servers are unresponsive to a request, the main server raises an alarm, for example, MissedStatsCollection.

5620 SAM integration with external systems

The 5620 SAM can be integrated with an external network- management system such as the 5620 NM. During 5620 SAM client installation, you can configure navigation from an external system for additional network-monitoring capability. See the *5620 SAM Integration Guide* for more information.

1.5 Security

A distributed system such as the 5620 SAM requires security at the session and other communication layers. A GUI or OSS client must provide user credentials for access to the 5620 SAM. You can protect the session credentials and messages using mechanisms and protocols that include the following:

- HTTPS as the application layer transport mechanism for OSS clients
- Telnet, SSH, SCP and SNMPv3 with USM or VACM at the application layer for communication with the managed network
- SSL at the presentation layer, between a main server and GUI or OSS clients, or between the primary and standby main servers in a redundant configuration
- NAT and IP validation at the network layer, between main servers and auxiliary servers, databases, or GUI or OSS clients

Figure 1-3 shows the 5620 SAM components and the available security mechanisms.

Figure 1-3 5620 SAM security

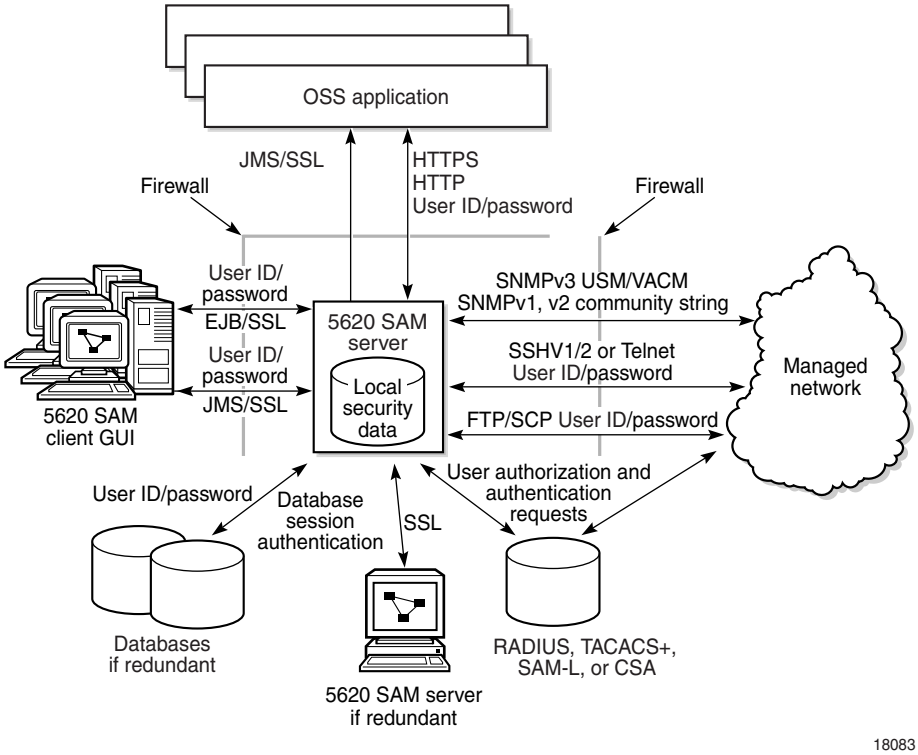

Session management

Effective session management requires authentication, authorization, and accounting (AAA) functions. Authentication is the verification of a user identification and password. Authorization is the assignment of different levels of access permissions to users. Accounting is the recording of user actions. A 5620 SAM operator can configure AAA functions using the local security capability of the 5620 SAM server, a third-party authentication server, or a combination of local and third-party mechanisms.

- Local authentication on the 5620 SAM server is provided with a local database of users and a local security scheme to verify logon attempts and assign permission levels for command execution.
- Supported third-party authentication servers are RADIUS, TACACS+, SAM-L, and CSA. These products run on their own platforms, with their own user lists and administration processes.

5620 SAM user accounts consist of a user name, password, and an associated user group and scope of command. User groups are used to assign and control user authorization levels, and to control the extent of access to such entities as customers, services, or faults. The system administrator can also limit the type of user access per managed device; for example, by allowing FTP access but denying console, Telnet, or SNMP access.

Client sessions

All client sessions have username and password protection.

- The 5620 SAM client GUI EJB sessions are protected by the username and password for the session.
- Each OSS client message is individually authenticated using cached information from an authorization server.
- JMS messages are protected by the user name and password for the JMS connection.

Database sessions

The database is accessible through a main server connection that is protected by a user ID and password. After each database update in response to a client request, the client activity log records the request details, which include the name of the associated 5620 SAM user.

Secure communication between a 5620 SAM server and an Oracle database is available through network security mechanisms such as NAT and IP-address validation. You can configure network security for the 5620 SAM during the installation of a 5620 SAM system.

Managed device sessions

The 5620 SAM server runs CLI, FTP, or secure FTP (SCP) commands on managed devices. Clients can also run these commands by issuing requests to the server. A managed device uses the local security database or a third-party service such as RADIUS or TACACS+ to perform AAA security functions.

SNMPv3 message authentication and authorization is handled by the USM and VACM mechanisms to define users and user authorization permissions. Older SNMP versions are authenticated with community string identifiers. Every SNMP message is individually authenticated.

Network transport security

Transport-layer security is available to the network protocols that carry messages between programs running on different platforms.

Main server and clients

Network communication between the 5620 SAM server and clients is carried out using XML/SOAP, EJB, or JMS messages.

- The OSS clients have two options for message security. When HTTPS is used to transport XML/SOAP messages, messages are protected using SSL. The less-secure HTTP can also be used.
- The Java GUI clients use the EJB interface, which is protected by an SSL connection.
- Both OSS and GUI clients use JMS, which is protected by SSL.
- In a redundant configuration, the secondary 5620 SAM server acts as a client of the primary server, which is protected by SSL.

Servers and managed devices

Messages are sent by a managed device to a 5620 SAM main or auxiliary server using SNMP, FTP, or SCP. When SNMPv3 is used, then SHA or MD5 authentication values are placed in messages and checked against an encryption key shared by the server and the managed device.

SSH provides the security for a CLI session between a 5620 SAM GUI client and a managed device.

RSA encryption is available for communication between auxiliary servers and managed devices. Contact Alcatel-Lucent support for more information about RSA encryption for auxiliary servers.

Firewall support

The 5620 SAM supports firewalls on all the server interfaces, that is, between the main server and auxiliary servers or clients, and between a main or auxiliary server and the managed network. See the *5620 SAM Planning Guide* for firewall and reserved port information.

1.6 Fault tolerance

Fault tolerance provides the reliability that customers expect by maintaining system availability in the event of a system component failure. 5620 SAM fault tolerance includes high availability through component redundancy. Deploying the 5620 SAM hardware and software components in a redundant configuration ensures that there is no single point of failure within the 5620 SAM system.

Redundant physical network interfaces and points of network entry ensure that there is no single point of failure between the 5620 SAM system and the managed network. Redundant network paths, for example, in-band and out-of-band management, can help to prevent the isolation of a 5620 SAM server from the network in the event of a device failure in the managed network.

Main server and database redundancy

A redundant 5620 SAM system consists of a primary server and an associated primary database that actively manage the network, and a second server and database pair in standby mode. A 5620 SAM server and database pair can be collocated on one station or run on separate stations. Figure 1-4 shows a fully distributed, redundant 5620 SAM configuration.

Figure 1-4 5620 SAM redundancy

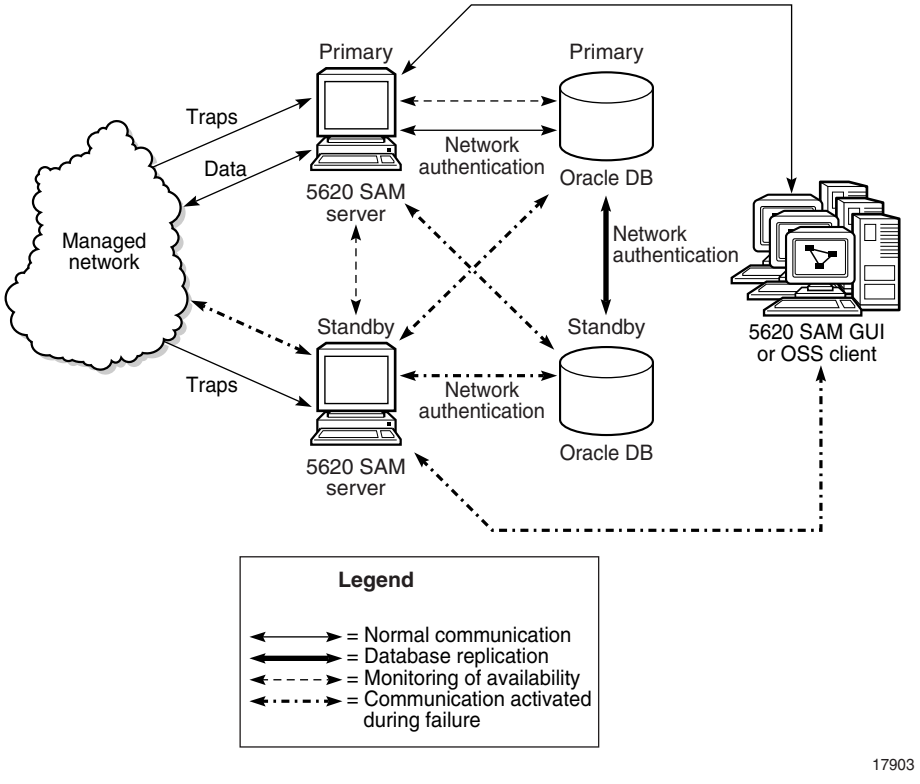

Secure communication between a 5620 SAM server and an Oracle database is available through network security mechanisms such as NAT and IP-address validation. You can configure network security for the 5620 SAM during 5620 SAM system installation.

See the *5620 SAM User Guide* for more information about 5620 SAM redundancy.

Main server redundancy

5620 SAM main server redundancy is achieved through clustering technology provided by a JBOSS Java application server on each main server. The primary and standby main servers regularly poll each other to monitor availability. The 5620 SAM server software state is held only on the primary server. Traps from the managed network are always sent to both primary and standby servers to avoid delays if an activity switch occurs.

If the primary server loses visibility of the standby server, it notifies the GUI clients. If the standby server loses visibility of the primary server, the standby server attempts to become the primary server by connecting to the primary database. The newly active server obtains its current state from the database.

Database redundancy

5620 SAM database redundancy uses Oracle Data Guard Replication in real-time apply mode to keep the standby database synchronized with data changes in the primary database. The supported fault-recovery operations are database switchovers and database failovers. A switchover is performed between two functioning databases to switch roles between primary and standby databases. A failover forces the standby database to become the primary database in the event of primary database failure or unavailability.

The primary 5620 SAM main server polls both databases to check for their availability. If the primary or standby database is unavailable, the server notifies the 5620 SAM GUI clients. If both 5620 SAM servers lose contact with the primary database, a failover occurs and the standby database becomes the new primary database.

Network session authentication is provided using the SYS user password that is configured during 5620 SAM system installation.

Auxiliary servers and 5620 SAM redundancy

Auxiliary servers are passively redundant. They do not cause or initiate main server or database redundancy activities, but if a Preferred auxiliary server ceases to respond to requests from the primary main server and a Reserved auxiliary server is available, the main server directs the current and subsequent requests to the Reserved auxiliary server until the Preferred auxiliary server is again available.

An auxiliary server communicates only with the server and database that are currently designated primary. After a 5620 SAM redundancy activity, for example, a database failover, the primary main server directs the auxiliary servers to stop communicating with the former primary component and instead communicate with the new primary component.

See the *5620 SAM User Guide* for more information about auxiliary servers and redundancy.

1.7 Standards compliance

Table 1-1 describes the 5620 SAM standards compliance.

Table 1-1 5620 SAM standards compliance

Standard	Description
3GPP	3GPP Technical Specification and Reports
draft-grant-tacacs-02.txt	TACACS+ client
draft-ylonen-ssh-protocol-00.txt	SSH
EJB 2.3	J2EE Enterprise Java Session Bean
ISO 8601	Calendar date
ITU-T X.721	SMI
ITU-T X.734	Event report management function
J2EE	JMS
M.3100/3120	Equipment and connection models
MTOSI	Compliance of generic network objects, inventory retrieval, and JMS over XML
RFC 0959	FTP
RFC 1213	SNMPv1
RFC 1738	Uniform Resource Locators (URL)
RFC 2138	RADIUS client 2618
RFC 3411-3415	SNMPv3
RFC 3416	SNMPv2c
SAML	SAM-L 1.1
SOAP	W3C SOAP 1.2
TMF 509/613	Network connectivity model
XML	W3C XML 1.0
XML	W3C Namespaces in XML
XML	W3C XML schemas

Alcatel-Lucent considers the following standards in the 5620 SAM GUI design:

- Sun Microsystems, *Java Look and Feel Design Guidelines*, Addison-Wesley Publishing Company, Reading, Massachusetts 1999.
- ANSI T1.232-1996, *Operations, Administration, and Provisioning (OAM&P)- G Interface Specifications for Use with the Telecommunications Management Network (TMN).*
- Telcordia (Bell Core) GR-2914-CORE Sept. 98, *Human Factors Requirements for Equipment to Improve Network Integrity.*

- Telcordia (Bell Core) GR-826-CORE, June 1994, Issue 1, Section 10.2 of OTGR, *User Interface Generic Requirements for Supporting Network Element Operations.*
- ITU-T Recommendation Z.361 (02/99), *Design guidelines for Human- Computer Interfaces (HCI) for the management of telecommunications networks.*
- ETSI EG 201 204 v1.1.1 (1997-05), *Human Factors (HF); User Interface design principles for the Telecommunications Management Network (TMN) applicable to the "G" Interface.*
- 3GPP 32-series R7 specification, published September, 2008
- 3GPP 32-series R8 specification, published December, 2009

Customer documentation and product support

Customer documentation

http://www.alcatel-lucent.com/myaccess

Product manuals and documentation updates are available at alcatel-lucent.com. If you are a new user and require access to this service, please contact your Alcatel-Lucent sales representative.

Technical Support

http://support.alcatel-lucent.com

Documentation feedback

documentation.feedback@alcatel-lucent.com

© 2011 Alcatel-Lucent. All rights reserved.

3HE 06500 AAAB TQZZA Edition 01