# Alcatel-Lucent 5620

## SERVICE AWARE MANAGER | RELEASE 9.0 R2

LTE ePC USER GUIDE

3HE 06503 AAAB TQZZA Edition 01

Alcatel-Lucent Proprietary
This document contains proprietary information of Alcatel-Lucent and is not to be disclosed or used except in accordance with applicable agreements.
Copyright 2011 © Alcatel-Lucent. All rights reserved.

Alcatel-Lucent assumes no responsibility for the accuracy of the information presented, which is subject to change without notice.

Alcatel, Lucent, Alcatel-Lucent, the Alcatel-Lucent logo, and TiMetra are registered trademarks of Alcatel-Lucent. All other trademarks are the property of their respective owners.

Copyright 2011 Alcatel-Lucent.
All rights reserved.

#### Disclaimers

Alcatel-Lucent products are intended for commercial uses. Without the appropriate network design engineering, they must not be sold, licensed or otherwise distributed for use in any hazardous environments requiring fail-safe performance, such as in the operation of nuclear facilities, aircraft navigation or communication systems, air traffic control, direct life-support machines, or weapons systems, in which the failure of products could lead directly to death, personal injury, or severe physical or environmental damage. The customer hereby agrees that the use, sale, license or other distribution of the products for any such application without the prior written consent of Alcatel-Lucent, shall be at the customer's sole risk. The customer hereby agrees to defend and hold Alcatel-Lucent harmless from any claims for loss, cost, damage, expense or liability that may arise out of or in connection with the use, sale, license or other distribution of the products in such applications.

This document may contain information regarding the use and installation of non-Alcatel-Lucent products. Please note that this information is provided as a courtesy to assist you. While Alcatel-Lucent tries to ensure that this information accurately reflects information provided by the supplier, please refer to the materials provided with any non-Alcatel-Lucent product and contact the supplier for confirmation. Alcatel-Lucent assumes no responsibility or liability for incorrect or incomplete information provided about non-Alcatel-Lucent products.

However, this does not constitute a representation or warranty. The warranties provided for Alcatel-Lucent products, if any, are set forth in contractual documentation entered into by Alcatel-Lucent and its customers.

This document was originally written in English. If there is any conflict or inconsistency between the English version and any other version of a document, the English version shall prevail.

When printed by Alcatel-Lucent, this document is printed on recycled paper.

# Alcatel-Lucent License Agreement

SAMPLE END USER LICENSE AGREEMENT

## 1. LICENSE

1.1 Subject to the terms and conditions of this Agreement, Alcatel-Lucent grants to Customer and Customer accepts a nonexclusive, nontransferable license to use any software and related documentation provided by Alcatel-Lucent pursuant to this Agreement ("Licensed Program") for Customer's own internal use, solely in conjunction with hardware supplied or approved by Alcatel-Lucent. In case of equipment failure, Customer may use the Licensed Program on a backup system, but only for such limited time as is required to rectify the failure.

1.2 Customer acknowledges that Alcatel-Lucent may have encoded within the Licensed Program optional functionality and capacity (including, but not limited to, the number of equivalent nodes, delegate workstations, paths and partitions), which may be increased upon the purchase of the applicable license extensions.

1.3 Use of the Licensed Program may be subject to the issuance of an application key, which shall be conveyed to the Customer in the form of a Supplement to this End User License Agreement. The purchase of a license extension may require the issuance of a new application key.

## 2. PROTECTION AND SECURITY OF LICENSED PROGRAMS

2.1 Customer acknowledges and agrees that the Licensed Program contains proprietary and confidential information of Alcatel-Lucent and its third party suppliers, and agrees to keep such information confidential. Customer shall not disclose the Licensed Program except to its employees having a need to know, and only after they have been advised of its confidential and proprietary nature and have agreed to protect same.

2.2 All rights, title and interest in and to the Licensed Program, other than those expressly granted to Customer herein, shall remain vested in Alcatel-Lucent or its third party suppliers. Customer shall not, and shall prevent others from copying, translating, modifying, creating derivative works, reverse engineering, decompiling, encumbering or otherwise using the Licensed Program except as specifically authorized under this Agreement. Notwithstanding the foregoing, Customer is authorized to make one copy for its archival purposes only. All appropriate copyright and other proprietary notices and legends shall be placed on all Licensed Programs supplied by Alcatel-Lucent, and Customer shall maintain and reproduce such notices on any full or partial copies made by it.

## 3. TERM

3.1 This Agreement shall become effective for each Licensed Program upon delivery of the Licensed Program to Customer.

3.2 Alcatel-Lucent may terminate this Agreement: (a) upon notice to Customer if any amount payable to Alcatel-Lucent is not paid within thirty (30) days of the date on which payment is due; (b) if Customer becomes bankrupt, makes an assignment for the benefit of its creditors, or if its assets vest or become subject to the rights of any trustee, receiver or other administrator; (c) if bankruptcy, reorganization or insolvency proceedings are instituted against Customer and not dismissed within 15 days; or (d) if Customer breaches a material provision of this Agreement and such breach is not rectified within 15 days of receipt of notice of the breach from Alcatel-Lucent.

3.3 Upon termination of this Agreement, Customer shall return or destroy all copies of the Licensed Program. All obligations of Customer arising prior to termination, and those obligations relating to confidentiality and nonuse, shall survive termination.

## 4. CHARGES

4.1 Upon shipment of the Licensed Program, Alcatel-Lucent will invoice Customer for all fees, and any taxes, duties and other charges. Customer will be invoiced for any license extensions upon delivery of the new software application key or, if a new application key is not required, upon delivery of the extension. All amounts shall be due and payable within thirty (30) days of receipt of invoice, and interest will be charged on any overdue amounts at the rate of 1 1/2% per month (19.6% per annum).

## 5. SUPPORT AND UPGRADES

5.1 Customer shall receive software support and upgrades for the Licensed Program only to the extent provided for in the applicable Alcatel-Lucent software support policy in effect from time to time, and upon payment of any applicable fees. Unless expressly excluded, this Agreement shall be deemed to apply to all updates, upgrades, revisions, enhancements and other software which may be supplied by Alcatel-Lucent to Customer from time to time.

## 6. WARRANTIES AND INDEMNIFICATION

6.1 Alcatel-Lucent warrants that the Licensed Program as originally delivered to Customer will function substantially in accordance with the functional description set out in the associated user documentation for a period of 90 days from the date of shipment, when used in accordance with the user documentation. Alcatel-Lucent's sole liability and Customer's sole remedy for a breach of this warranty shall be Alcatel-Lucent's good faith efforts to rectify the nonconformity or, if after repeated efforts Alcatel-Lucent is unable to rectify the nonconformity, Alcatel-Lucent shall accept return of the Licensed Program and shall refund to Customer all amounts paid in respect thereof. This warranty is available only once in respect of each Licensed Program, and is not renewed by the payment of an extension charge or upgrade fee.

6.2 ALCATEL-LUCENT EXPRESSLY DISCLAIMS ALL OTHER WARRANTIES, REPRESENTATIONS, COVENANTS OR CONDITIONS OF ANY KIND, WHETHER EXPRESS OR IMPLIED, INCLUDING WITHOUT LIMITATION, WARRANTIES OR REPRESENTATIONS OF WORKMANSHIP, MERCHANTABILITY, FITNESS FOR A PARTICULAR PURPOSE, DURABILITY, OR THAT THE OPERATION OF THE LICENSED PROGRAM WILL BE ERROR FREE OR THAT THE LICENSED PROGRAMS WILL NOT INFRINGE UPON ANY THIRD PARTY RIGHTS.

6.3 Alcatel-Lucent shall defend and indemnify Customer in any action to the extent that it is based on a claim that the Licensed Program furnished by Alcatel-Lucent infringes any patent, copyright, trade secret or other intellectual property right, provided that Customer notifies Alcatel-Lucent within ten (10) days of the existence of the claim, gives Alcatel-Lucent sole control of the litigation or settlement of the claim, and provides all such assistance as Alcatel-Lucent may reasonably require. Notwithstanding the foregoing, Alcatel-Lucent shall have no liability if the claim results from any modification or unauthorized use of the Licensed Program by Customer, and Customer shall defend and indemnify Alcatel-Lucent against any such claim.

6.4 Alcatel-Lucent Products are intended for standard commercial uses. Without the appropriate network design engineering, they must not be sold, licensed or otherwise distributed for use in any hazardous environments requiring fail safe performance, such as in the operation of nuclear facilities, aircraft navigation or communication systems, air traffic control, direct life-support machines, or weapons systems, in which the failure of products could lead directly to death, personal injury, or severe physical or environmental damage. The Customer hereby agrees that the use, sale, license or other distribution of the Products for any such application without the prior written consent of Alcatel-Lucent, shall be at the Customer's sole risk. The Customer also agrees to defend and hold Alcatel-Lucent harmless from any claims for loss, cost, damage, expense or liability that may arise out of or in connection with the use, sale, license or other distribution of the Products in such applications.

## 7. LIMITATION OF LIABILITY

7.1 IN NO EVENT SHALL THE TOTAL COLLECTIVE LIABILITY OF ALCATEL-LUCENT, ITS EMPLOYEES, DIRECTORS, OFFICERS OR AGENTS FOR ANY CLAIM, REGARDLESS OF VALUE OR NATURE, EXCEED THE AMOUNT PAID UNDER THIS AGREEMENT FOR THE LICENSED PROGRAM THAT IS THE SUBJECT MATTER OF THE CLAIM. IN NO EVENT SHALL THE TOTAL COLLECTIVE LIABILITY OF ALCATEL-LUCENT, ITS EMPLOYEES, DIRECTORS, OFFICERS OR AGENTS FOR ALL CLAIMS EXCEED THE TOTAL AMOUNT PAID BY CUSTOMER TO ALCATEL-LUCENT HEREUNDER. NO PARTY SHALL BE LIABLE FOR ANY INDIRECT, SPECIAL OR CONSEQUENTIAL DAMAGES, WHETHER OR NOT SUCH DAMAGES ARE FORESEEABLE, AND/OR THE PARTY HAD BEEN ADVISED OF THE POSSIBILITY OF SUCH DAMAGES.

7.2 The foregoing provision limiting the liability of Alcatel-Lucent's employees, agents, officers and directors shall be deemed to be a trust provision, and shall be enforceable by such employees, agents, officers and directors as trust beneficiaries.

## 8. GENERAL

8.1 Under no circumstances shall either party be liable to the other for any failure to perform its obligations (other than the payment of any monies owing) where such failure results from causes beyond that party's reasonable control.

8.2 This Agreement constitutes the entire agreement between Alcatel-Lucent and Customer and supersedes all prior oral and written communications. All amendments shall be in writing and signed by authorized representatives of both parties.

8.3 If any provision of this Agreement is held to be invalid, illegal or unenforceable, it shall be severed and the remaining provisions shall continue in full force and effect.

8.4 The Licensed Program may contain freeware or shareware obtained by Alcatel-Lucent from a third party source. No license fee has been paid by Alcatel-Lucent for the inclusion of any such freeware or shareware, and no license fee is charged to Customer for its use. The Customer agrees to be bound by any license agreement for such freeware or shareware. CUSTOMER ACKNOWLEDGES AND AGREES THAT THE THIRD PARTY SOURCE PROVIDES NO WARRANTIES AND SHALL HAVE NO LIABILITY WHATSOEVER IN RESPECT OF CUSTOMER'S POSSESSION AND/OR USE OF THE FREEWARE OR SHAREWARE.

8.5 Alcatel-Lucent shall have the right, at its own expense and upon reasonable written notice to Customer, to periodically inspect Customer's premises and such documents as it may reasonably require, for the exclusive purpose of verifying Customer's compliance with its obligations under this Agreement.

8.6 All notices shall be sent to the parties at the addresses listed above, or to any such address as may be specified from time to time. Notices shall be deemed to have been received five days after deposit with a post office when sent by registered or certified mail, postage prepaid and receipt requested.

8.7 If the Licensed Program is being acquired by or on behalf of any unit or agency of the United States Government, the following provision shall apply: If the Licensed Program is supplied to the Department of Defense, it shall be classified as "Commercial Computer Software" and the United States Government is acquiring only "restricted rights" in the Licensed Program as defined in DFARS 227-7202-1(a) and 227.7202-3(a), or equivalent. If the Licensed Program is supplied to any other unit or agency of the United States Government, rights will be defined in Clause 52.227-19 or 52.227-14 of the FAR, or if acquired by NASA, Clause 18-52.227-86(d) of the NASA Supplement to the FAR, or equivalent. If the software was acquired under a contract subject to the October 1988 Rights in Technical Data and Computer Software regulations, use, duplication and disclosure by the Government is subject to the restrictions set forth in DFARS 252-227.7013(c)(1)(ii) 1988, or equivalent.

8.8 Customer shall comply with all export regulations pertaining to the Licensed Program in effect from time to time. Without limiting the generality of the foregoing, Customer expressly warrants that it will not directly or indirectly export, reexport, or transship the Licensed Program in violation of any export laws, rules or regulations of Canada, the United States or the United Kingdom.

8.9 No term or provision of this Agreement shall be deemed waived and no breach excused unless such waiver or consent is in writing and signed by the party claimed to have waived or consented. The waiver by either party of any right hereunder, or of the failure to perform or of a breach by the other party, shall not be deemed to be a waiver of any other right hereunder or of any other breach or failure by such other party, whether of a similar nature or otherwise.

8.10 This Agreement shall be governed by and construed in accordance with the laws of the Province of Ontario. The application of the United Nations Convention on Contracts for the International Sale of Goods is hereby expressly excluded.

# Preface

The Preface provides general information about the 5620 Service Aware Manager documentation suite.

**Note —** You can use the Search function of Acrobat Reader (File→Search) to find a term in a PDF of this document. To refine your search, use appropriate search options (for example, search for whole words only or enable case-sensitive searching). You can also search for a term in multiple PDFs at once. For more information, see the Help for Acrobat Reader.

## 5620 SAM documentation suite

The 5620 SAM documentation suite describes the 5620 SAM and the associated network management of its supported devices. Contact your Alcatel-Lucent support representative for information about specific network or facility considerations.

Table 1 lists the documents in the 5620 SAM documentation suite.

**Table 1 5620 SAM customer documentation suite**

| Guide | Description |
|---|---|
| **5620 SAM core documentation** | |
| *5620 SAM Planning Guide* | The *5620 SAM Planning Guide* provides information about 5620 SAM scalability and recommended hardware configurations. |

**(1 of 4)**

| Guide | Description |
|---|---|
| *5620 SAM \| 5650 CPAM Installation and Upgrade Guide* | The *5620 SAM \| 5650 CPAM Installation and Upgrade Guide* provides OS considerations, configuration information, and procedures for the following:<br>• installing, upgrading, and uninstalling 5620 SAM and 5650 CPAM software in standalone and redundant deployments<br>• 5620 SAM system migration to a different system<br>• conversion from a standalone to a redundant 5620 SAM system |
| *5620 SAM User Guide* | The *5620 SAM User Guide* provides information about using the 5620 SAM to manage the service-aware IP/MPLS network, including GUI basics, commissioning, service configuration, and policy management.<br>The *5620 SAM User Guide* uses a task-based format. Each chapter contains:<br>• a workflow that describes the steps for configuring and using the functionality<br>• detailed procedures that list the configurable parameters on the associated forms<br>5620 SAM management information specific to LTE network elements is covered in the *5620 SAM LTE ePC User Guide* and *5620 SAM LTE RAN User Guide*.<br>5620 SAM management information specific to 1830 PSS network elements is covered in the *5620 SAM Optical User Guide*. |
| *5620 SAM Parameter Guide* | The *5620 SAM Parameter Guide* provides:<br>• parameter descriptions that include value ranges and default values<br>• parameter options and option descriptions<br>• parameter and option dependencies<br>• parameter mappings to the 5620 SAM-O XML equivalent property names<br>There are dynamic links between the procedures in the *5620 SAM User Guide* and the parameter descriptions in the *5620 SAM Parameter Guide*. See Procedure 2 for more information.<br>Parameters specific to LTE network elements are covered in the *5620 SAM LTE Parameter Reference*.<br>Parameters specific to 1830 PSS network elements are covered in the *5620 SAM Optical Parameter Reference*. |
| *5620 SAM Statistics Management Guide* | The *5620 SAM Statistics Management Guide* provides information about how to configure performance and accounting statistics collection and how to view counters using the 5620 SAM. Network examples are included. |
| *5620 SAM Scripts and Templates Developer Guide* | The *5620 SAM Scripts and Templates Developer Guide* provides information that allows you to develop, manage, and execute CLI-based or XML-based scripts or templates.<br>The guide is intended for developers, skilled administrators, and operators who are expected to be familiar with the following:<br>• CLI scripting, XML, and the Velocity engine<br>• basic scripting or programming<br>• 5620 SAM functions |
| *5620 SAM Troubleshooting Guide* | The *5620 SAM Troubleshooting Guide* provides task-based procedures and user documentation to:<br>• help resolve issues in the managed and management networks<br>• identify the root cause and plan corrective action for:<br>  • alarm conditions on a network object or customer service<br>  • problems on customer services with no associated alarms<br>• list problem scenarios, possible solutions, and tools to help check:<br>  • network management LANs<br>  • network management platforms and operating systems<br>  • 5620 SAM client GUIs and client OSS applications<br>  • 5620 SAM servers<br>  • 5620 SAM databases |

**(2 of 4)**

| Guide | Description |
|---|---|
| *5620 SAM Maintenance Guide* | The *5620 SAM Maintenance Guide* provides procedures for:<br>• generating baseline information for 5620 SAM applications<br>• performing daily, weekly, monthly, and as-required maintenance activities for 5620 SAM-managed networks |
| *5620 SAM Integration Guide* | The *5620 SAM Integration Guide* provides procedures to allow the 5620 SAM to integrate with additional components. |
| *5620 SAM System Architecture Guide* | The *5620 SAM System Architecture Guide* is intended for technology officers and network planners to increase their knowledge of the 5620 SAM software structure and components. It describes the system structure, software components, and interfaces of the 5620 SAM. In addition, 5620 SAM fault tolerance, security, and network management capabilities are discussed from an architectural perspective. |
| *5620 SAM Supervision Module User Guide* | The *5620 SAM Supervision Module User Guide* provides information about how to configure and use the web-based 5620 SAM Supervision Module for fault management and at-a-glance network element monitoring. |
| *5620 SAM Network Element Compatibility Guide* | The *5620 SAM Network Element Compatibility Guide* provides release-specific information about the compatibility of managed device features in 5620 SAM releases. |
| *5620 SAM Release Description* | The *5620 SAM Release Description* provides information about the new features associated with a 5620 SAM software release. |
| *5620 SAM Glossary* | The *5620 SAM Glossary* defines terms and acronyms used in all of the 5620 SAM documentation, including 5620 SAM LTE documentation. |
| *5620 SAM XML OSS Interface Developer Guide* | The *5620 SAM XML OSS Interface Developer Guide* provides information that allows you to:<br>• use the 5620 SAM XML OSS interface to access network management information<br>• learn about the information model associated with the managed network<br>• develop OSS applications using the packaged methods, classes, data types, and objects necessary to manage 5620 SAM functions |
| **5620 SAM LTE documentation** | |
| *5620 SAM LTE ePC User Guide* | The *5620 SAM LTE ePC User Guide* describes how to discover, configure, and manage LTE ePC devices using the 5620 SAM. The guide is intended for LTE ePC network planners, administrators, and operators.<br>Alcatel-Lucent recommends that you review the entire *5620 SAM LTE ePC User Guide* before you attempt to use the 5620 SAM in your LTE network. |
| *5620 SAM LTE RAN User Guide* | The *5620 SAM LTE RAN User Guide* describes how to discover, configure, and manage the eNodeB using the 5620 SAM. The guide is intended for LTE RAN network planners, administrators, and operators.<br>Alcatel-Lucent recommends that you review the entire *5620 SAM LTE RAN User Guide* before you attempt to use the 5620 SAM in your LTE network. |
| *5620 SAM LTE Parameter Reference* | The *5620 SAM LTE Parameter Reference* provides a list of all LTE ePC and LTE RAN parameters supported in the 5620 SAM. |
| *5620 SAM LTE Alarm Reference* | The *5620 SAM LTE Alarm Reference* provides a list of LTE ePC and LTE RAN alarms that can be reported in the 5620 SAM GUI. |
| *5620 SAM 3GPP OSS Interface Developer Guide* | The *5620 SAM 3GPP OSS Interface Developer Guide* describes the components and architecture of the 3GPP OSS interface to the 5620 SAM. It includes procedures and samples to assist OSS application developers to use the 3GPP interface to manage LTE devices. |
| *5620 SAM 3GPP OSS Interface Compliance Statements* | The *5620 SAM 3GPP OSS Interface Compliance Statements* document describes the compliance of the 5620 SAM 3GPP OSS interface with the 3GPP standard. |
| *5620 SAM LTE RAN Release Description* | The *5620 SAM LTE RAN Release Description* provides information about the LTE RAN features associated with the release. |

**(3 of 4)**

| Guide | Description |
|---|---|
| **5620 SAM optical documentation** | |
| *5620 SAM Optical User Guide* | The *5620 SAM Optical User Guide* describes how to discover, configure, and manage optical devices using the 5620 SAM. The guide is intended for optical network planners, administrators, and operators.<br>Alcatel-Lucent recommends that you review the entire *5620 SAM Optical User Guide* before you attempt to use the 5620 SAM in your network. |
| *5620 SAM Optical Parameter Reference* | The *5620 SAM Optical Parameter Reference* provides a list of all optical device parameters supported in the 5620 SAM. |
| *5620 SAM Optical Alarm Reference* | The *5620 SAM Optical Alarm Reference* provides a list of optical device alarms that can be reported in the 5620 SAM GUI. |

**(4 of 4)**

## Procedure 1 To find the 5620 SAM user documentation

The user documentation is available from the following sources:

- the User_Documentation directory on the product DVD-ROM
- Help→5620 SAM User Documentation in the 5620 SAM client GUI main menu

**Note —** Users of Mozilla browsers may receive an error message when using the User Documentation Index page (index.html) to open the PDF files in the 5620 SAM documentation suite. The offline storage and default cache values used by the browsers are the cause of the error message.

Alcatel-Lucent recommends changing the offline storage (Mozilla Firefox) or cache (Mozilla 1.7) values to 100 Mbytes to eliminate the error message.

### Procedure 2 To view parameter descriptions from the *5620 SAM User Guide*

You can click on a parameter name in a *5620 SAM User Guide* procedure to open the matching parameter description in the *5620 SAM Parameter Guide*. Ensure the following conditions are true beforehand:

- the *5620 SAM Parameter Guide* and *5620 SAM User Guide* are located in the same directory
- Adobe Reader Release 5.0 or later is installed

**1** To view a parameter description when both the *5620 SAM User Guide* and the *5620 SAM Parameter Guide* are open in Adobe Acrobat, click on the parameter name in the *5620 SAM User Guide*.

The parameter description is displayed in the *5620 SAM Parameter Guide*.

**2** To view a parameter description when only the *5620 SAM User Guide* is open in Adobe Acrobat:

**i** Click on a parameter name in a procedure in the *5620 SAM User Guide*. The *5620 SAM User Guide* closes and the *5620 SAM Parameter Guide* opens to display the parameter description.

**ii** Double-click on the Previous View button in Adobe Acrobat (or press Alt + ←) to re-open the *5620 SAM User Guide*. The *5620 SAM User Guide* opens and displays the parameter from step i.

## Prerequisites

Readers of the 5620 SAM documentation suite are assumed to be familiar with the following:

- 5620 SAM software structure and components
- 5620 SAM GUI operations and tools
- typical 5620 SAM management tasks and procedures
- device and network management concepts

## Conventions

Table 2 lists the conventions that are used throughout the documentation.

**Table 2 Documentation conventions**

| Convention | Description | Example |
|---|---|---|
| Key name | Press a keyboard key | Delete |
| Italics | Identifies a variable | *hostname* |

**(1 of 2)**

| Convention | Description | Example |
|---|---|---|
| Key+Key | Type the appropriate consecutive keystroke sequence | CTRL+G |
| Key–Key | Type the appropriate simultaneous keystroke sequence | CTRL–G |
| * | An asterisk is a wildcard character, which means “any character” in a search argument. | log_file*.txt |
| ↵ | Press the Return key | ↵ |
| — | An em dash indicates there is no information. | — |
| → | Indicates that a cascading submenu results from selecting a menu item | Policies→Alarm Policies |

**(2 of 2)**

## Procedures with options or substeps

When there are options in a procedure, they are identified by letters. When there are substeps in a procedure, they are identified by Roman numerals.

### Example of options in a procedure

At step 1, you can choose option a or b. At step 2, you must do what the step indicates.

**1** This step offers two options. You must choose one of the following.

- **a** This is one option.
- **b** This is another option.

**2** You must perform this step.

### Example of substeps in a procedure

At step 1, you must perform a series of substeps within a step. At step 2, you must do what the step indicates.

**1** This step has a series of substeps that you must perform to complete the step. You must perform the following substeps.

- **i** This is the first substep.
- **ii** This is the second substep.
- **iii** This is the third substep.

**2** You must perform this step.

## Measurement conventions

Measurements in this document are expressed in metric units and follow the Système international d’unités (SI) standard for abbreviation of metric units. If imperial measurements are included, they appear in brackets following the metric unit.

Table 3 lists the measurement symbols used in this document.

**Table 3 Bits and bytes conventions**

| Measurement | Symbol |
|---|---|
| bit | b |
| byte | byte |
| kilobits per second | kb/s |

## Important information

The following conventions are used to indicate important information:

**Warning —** Warning indicates that the described activity or situation may, or will, cause equipment damage or serious performance problems.

**Caution —** Caution indicates that the described activity or situation may, or will, cause service interruption.

**Note —** Notes provide information that is, or may be, of special interest.

# Contents

**Preface** **ix**

5620 SAM documentation suite ..... ix
Procedure 1 To find the 5620 SAM user documentation ..... xii
Procedure 2 To view parameter descriptions from the 5620 SAM User Guide ..... xiii
Prerequisites ..... xiii
Conventions ..... xiii
Procedures with options or substeps ..... xiv
Measurement conventions ..... xiv
Important information ..... xv

## Getting started

**1 — 5620 SAM LTE ePC workflows** **1-1**

1.1 5620 SAM LTE ePC workflow overview ..... 1-2
1.2 Workflow for general management tasks ..... 1-3
1.3 Workflow for LTE ePC-specific management tasks ..... 1-3

**2 — LTE ePC management using the 5620 SAM** **2-1**

2.1 5620 SAM LTE NE management solution overview ..... 2-2
5620 SAM ..... 2-3
5620 SAM LTE ePC ..... 2-3
5620 SAM LTE RAN ..... 2-5
5620 SAM LTE 3GPP reference points ..... 2-5

2.2 Supported 5620 SAM LTE NE management functions ..... 2-5
Supported 5620 SAM LTE ePC management functionality..... 2-6
Supported 5620 SAM LTE RAN management functionality ..... 2-7
2.3 5620 SAM LTE path and mobile service management overview..... 2-7
EPS paths ..... 2-7
EPS paths topology map..... 2-8
Mobile service ..... 2-8
Transport layer correlation..... 2-8

**3 — 5620 SAM LTE ePC features and functionality 3-1**
3.1 LTE ePC features for 5620 SAM Release 9.0..... 3-2
3.2 LTE ePC features for 5620 SAM Release 8.0..... 3-2

# LTE ePC device discovery

**4 — 5620 SAM management configuration 4-1**
4.1 5620 SAM management configuration overview ..... 4-2
Firewalls and file transfers ..... 4-2
4.2 5620 SAM management configuration workflow..... 4-3
4.3 5620 SAM management procedures ..... 4-3
7750 MG management by the 5620 SAM ..... 4-3
Procedure 4-1 To configure a 7750 MG for management by the 5620 SAM..... 4-4
Procedure 4-2 To configure a 7750 MG for management by the 5620 SAM using SNMPv3 ..... 4-7
Procedure 4-3 To configure the 5620 SAM to discover and manage a 7750 MG..... 4-10
Procedure 4-4 To change from SNMPv2c management of a 7750 MG to SNMPv3 management..... 4-12
9471 MME management by the 5620 SAM..... 4-13
Procedure 4-5 To configure the 5620 SAM to discover and manage a 9471 MME ..... 4-13
5780 DSC management by the 5620 SAM ..... 4-15
Procedure 4-6 To configure the 5780 DSC firewall rules for management by the 5620 SAM ..... 4-15
Procedure 4-7 To remove the old firewall rules and load the new firewall rules..... 4-17
Procedure 4-8 To configure the 5620 SAM to discover and manage the 5780 DSC ..... 4-17

# Mobile core configuration and management


## 5 — Configuring and managing LTE ePC equipment 5-1

5.1 LTE ePC equipment configuration and management overview ..... 5-2
7750 MG ..... 5-2
9471 MME ..... 5-2
5780 DSC ..... 5-3
Unmanaged mobile NEs and gateways ..... 5-4
5620 SAM LTE ePC licensing ..... 5-5
Additional information ..... 5-5
5.2 NE properties form ..... 5-6
5.3 Shelf properties ..... 5-7
5780 DSC shelves in the equipment navigation view ..... 5-7
5.4 Card slots and cards ..... 5-7
5780 DSC card slots and cards in the equipment navigation view ..... 5-8
5.5 Daughter cards ..... 5-8
5.6 Ports ..... 5-8
5.7 Physical links ..... 5-9
5.8 ISA-MG groups ..... 5-9
5.9 Workflow to configure LTE ePC equipment ..... 5-9
5.10 Configuring LTE ePC equipment procedures ..... 5-9
Procedure 5-1 To configure the chassis mode for the 7750 MG ..... 5-10
Procedure 5-2 To configure a 7750 MG ISM Mobile card type ..... 5-10
Procedure 5-3 To create an SGW or a PGW instance ..... 5-11
Procedure 5-4 To create and configure an ISA-MG group ..... 5-12
Procedure 5-5 To start the 9471 MME MI GUI and Provisioning GUI from the 5620 SAM ..... 5-12
Procedure 5-6 To start the 5780 DSC GUI from the 5620 SAM ..... 5-14
Procedure 5-7 To view unmanaged mobile NE and gateway properties ..... 5-15

## 6 — Configuring LTE ePC gateways 6-1

6.1 LTE ePC gateway configuration management overview ..... 6-2
Interfaces ..... 6-2
Signaling ..... 6-2
Gateway GPRS Support Node ..... 6-2
Reference points ..... 6-2
Additional information ..... 6-2
6.2 Workflow to configure an LTE ePC gateway ..... 6-3
6.3 Configuring and viewing an SGW ..... 6-3
Configuring SGW signaling ..... 6-4
Procedure 6-1 To configure SGW signaling ..... 6-4
Configuring SGW reference points ..... 6-5
Procedure 6-2 To configure SGW reference points ..... 6-6
Procedure 6-3 To add an APN to an SGW ..... 6-9
Adding charging profiles to an SGW ..... 6-10
Procedure 6-4 To add charging profiles to an SGW ..... 6-10
Viewing and changing SGW properties ..... 6-11
Procedure 6-5 To view and change SGW instance properties ..... 6-11

Procedure 6-6 To view SGW application properties ..... 6-13
Procedure 6-7 To view SGW interface properties ..... 6-13
Procedure 6-8 To view SGW interface member properties ..... 6-14
6.4 Configuring and viewing a PGW ..... 6-14
Configuring PGW signaling ..... 6-14
Procedure 6-9 To configure PGW signaling ..... 6-14
Configuring PGW reference points ..... 6-16
Procedure 6-10 To configure PGW reference points ..... 6-16
Configuring a PGW APN ..... 6-20
Procedure 6-11 To add an APN to a PGW ..... 6-20
IP address pools ..... 6-23
Procedure 6-12 To configure IP address pools ..... 6-23
Adding charging profiles to a PGW ..... 6-24
Procedure 6-13 To add charging profiles to a PGW ..... 6-25
Viewing and changing PGW properties ..... 6-26
Procedure 6-14 To view and change PGW instance properties ..... 6-26
Procedure 6-15 To view PGW application properties ..... 6-27
Procedure 6-16 To view PGW interface properties ..... 6-27
Procedure 6-17 To view PGW interface member properties ..... 6-28
6.5 Configuring a 7750 MG for IP packet reassembly ..... 6-28
Procedure 6-18 To configure an IP reassembly daughter card on an ISM mobile card ..... 6-29
Procedure 6-19 To enable IP reassembly on a VPRN L3 access interface ..... 6-29
Procedure 6-20 To configure IP packet reassembly on a network interface ..... 6-30
6.6 Configuring a LAG on a 7750 MG ..... 6-31
Procedure 6-21 To configure a LAG on a 7750 MG ..... 6-32

**7 — Viewing 9471 MME properties 7-1**

7.1 Viewing 9471 MME properties overview ..... 7-2
7.2 9471 MME viewing procedures ..... 7-2
Procedure 7-1 To view 9471 MME network element properties ..... 7-2
Procedure 7-2 To view 9471 MME shelf, shelf PDU, card, fan tray, card slot, and port properties ..... 7-2
Procedure 7-3 To view 9471 MME instance properties ..... 7-4
Procedure 7-4 To view 9471 MME interface function properties ..... 7-4
Procedure 7-5 To view 9471 MME application function properties ..... 7-5
Procedure 7-6 To view 9471 MME packet handler properties ..... 7-5

**8 — Viewing 5780 DSC properties 8-1**

8.1 Viewing 5780 DSC properties overview ..... 8-2
8.2 5780 DSC viewing procedures ..... 8-2
Viewing 5780 DSC equipment properties ..... 8-2
Procedure 8-1 To view 5780 DSC network element properties ..... 8-2
Procedure 8-2 To view 5780 DSC shelf, card, fan tray, power supply, card slot, and port properties ..... 8-3
Procedure 8-3 To view 5780 DSC instance properties ..... 8-5
Procedure 8-4 To view diameter proxy agent properties ..... 8-6

Procedure 8-5 To view policy charging rules properties ..... 8-7
Procedure 8-6 To view policy charging rules group properties..... 8-8

## 9 — Configuring LTE ePC mobile regions 9-1

9.1 LTE ePC mobile region overview..... 9-2
9.2 Workflow to configure a mobile region..... 9-2
9.3 Mobile region configuration procedures ..... 9-2
Procedure 9-1 To create a mobile region ..... 9-2
Procedure 9-2 To assign a mobile region to an SGW or a PGW..... 9-3
Procedure 9-3 To view the properties of a mobile region ..... 9-4

# LTE ePC path and mobile service management

## 10 — EPS path topology map 10-1

10.1 EPS path topology map overview ..... 10-2
EPS path topology map window..... 10-2
EPS path topology map panel ..... 10-3
Zoom in and out using a mouse ..... 10-3
EPS path topology map toolbar ..... 10-4
10.2 EPS path topology menu ..... 10-5
10.3 EPS path topology map management procedures..... 10-6
Procedure 10-1 To open the EPS path topology map ..... 10-6
Procedure 10-2 To view EPS path topology map elements ..... 10-6
Procedure 10-3 To save a map view to a file ..... 10-8
Procedure 10-4 To zoom in and zoom out of a map ..... 10-8
Procedure 10-5 To view and modify EPS path information ..... 10-9

## 11 — Viewing LTE ePC peers and paths 11-1

11.1 Viewing EPS peers and paths overview ..... 11-2
EPS peers ..... 11-2
EPS paths ..... 11-2
11.2 Viewing the properties of EPS peers and paths ..... 11-3
Procedure 11-1 To view the properties of EPS peers from the EPS Peers and Paths form ..... 11-3
Procedure 11-2 To view the properties of EPS paths from the EPS Peers and Paths form ..... 11-5

## 12 — Transport layer correlation for EPS paths 12-1

12.1 Transport layer correlation with EPS paths overview ..... 12-2
EPS paths ..... 12-2
Transport segments of EPS paths ..... 12-2
EPS path drill-down hints ..... 12-2
EPS path drill-down operations ..... 12-3
12.2 Workflow for transport layer correlation for EPS paths..... 12-4

12.3 EPS path drill-down hints ..... 12-4
S1-U path drill-down hints ..... 12-4
S5 path drill-down hints ..... 12-5
S11 path drill-down hints ..... 12-5
Gx path drill-down hints ..... 12-5
12.4 EPS path drill-down hint creation and validation ..... 12-6
Procedure 12-1 To create an EPS path drill-down hint ..... 12-6
EPS path drill-down hint validation ..... 12-8
Troubleshooting EPS path drill-down hint creation errors ..... 12-8
Procedure 12-2 To troubleshoot EPS path drill-down hint creation errors ..... 12-9
12.5 Drill-down operation prerequisites and restrictions by path type ..... 12-9
General prerequisites and restrictions ..... 12-9
S1-U path drill-down operation prerequisites and restrictions ..... 12-10
S5 path drill-down operation prerequisites and restrictions ..... 12-10
S11 path drill-down operation prerequisites and restrictions ..... 12-11
Gx path drill-down operation prerequisites and restrictions ..... 12-11
12.6 Performing a manual drill-down operation ..... 12-11
Procedure 12-3 To perform a manual drill-down operation ..... 12-11
12.7 Troubleshooting drill-down operations ..... 12-13
Drill-down operation failure logs and alarms ..... 12-13
Procedure 12-4 To troubleshoot a drill-down operation ..... 12-13

## 13 — Mobile service management 13-1

13.1 Mobile service overview ..... 13-2
13.2 Sample mobile service ..... 13-2
13.3 Mobile service characteristics ..... 13-2
13.4 Mobile service creation and update process ..... 13-2
13.5 Mobile service management menu ..... 13-2
13.6 Mobile service management procedures ..... 13-3
Procedure 13-1 To view and modify mobile service properties ..... 13-3

# LTE ePC profiles and policies configuration

## 14 — Configuring LTE ePC profiles and policies 14-1

14.1 LTE ePC profiles and policies overview ..... 14-2
Diameter peer profile ..... 14-2
Diameter profile ..... 14-2
GTP prime server group profile ..... 14-2
GTP profile ..... 14-2
QCI policies ..... 14-3
PGW charging profile ..... 14-3
SGW charging profile ..... 14-3
PLMN list profile ..... 14-3
Lawful Intercept ..... 14-3
14.2 Workflow to configure LTE ePC profiles and policies ..... 14-4

14.3 LTE ePC profiles and policies configuration and viewing procedures ..... 14-6
Procedure 14-1 To configure a GTP profile ..... 14-6
Procedure 14-2 To view a GTP profile ..... 14-7
Procedure 14-3 To configure a GTP prime server group profile ..... 14-7
Procedure 14-4 To view a GTP prime server group profile ..... 14-9
Procedure 14-5 To configure a diameter profile ..... 14-9
Procedure 14-6 To view a diameter profile ..... 14-10
Procedure 14-7 To configure a diameter peer profile ..... 14-11
Procedure 14-8 To view a diameter peer profile ..... 14-13
Procedure 14-9 To configure a QCI policy ..... 14-14
Procedure 14-10 To change a QCI entry ..... 14-15
Procedure 14-11 To view a QCI policy ..... 14-16
Procedure 14-12 To configure a PGW charging profile ..... 14-16
Procedure 14-13 To view a PGW charging profile ..... 14-17
Procedure 14-14 To configure an SGW charging profile ..... 14-17
Procedure 14-15 To view an SGW charging profile ..... 14-19
Procedure 14-16 To configure a PLMN list group ..... 14-19
Procedure 14-17 To view a PLMN list group ..... 14-20
Procedure 14-18 To configure an LTE LI delivery function peer policy ..... 14-20
Procedure 14-19 To configure an LTE LI interception target policy ..... 14-21

# LTE ePC NE maintenance

## 15 — Maintaining LTE ePC NEs 15-1

15.1 LTE ePC NE maintenance overview ..... 15-2
Managing LTE ePC NE deployments ..... 15-2
Managing LTE ePC NE backups and restores ..... 15-2
Managing LTE ePC NE software upgrades ..... 15-3
LTE ePC NE file-system browsing ..... 15-4
Secure file transfers for site backups and upgrades ..... 15-4
15.2 Workflow for LTE ePC NE maintenance ..... 15-5
15.3 NE maintenance procedures ..... 15-6
Backup and restore procedures ..... 15-6
Procedure 15-1 To create a device backup policy ..... 15-6
Procedure 15-2 To perform an immediate device backup, restore, or configuration save ..... 15-8
Procedure 15-3 To import a device backup to the 5620 SAM database ..... 15-9
Procedure 15-4 To export a device backup to a file ..... 15-10
Procedure 15-5 To restore a device configuration backup other than the most recent ..... 15-10
Software upgrade procedures ..... 15-11
Procedure 15-6 To import device software image or description files to the 5620 SAM database ..... 15-11
Procedure 15-7 To assign a 9471 MME software upgrade policy ..... 15-12
Procedure 15-8 To perform a 9471 MME software image download ..... 15-13
Procedure 15-9 To assign a 7750 MG software upgrade policy ..... 15-14

Procedure 15-10 To perform an immediate 7750 MG software upgrade ..... 15-16
Procedure 15-11 To view the deployment, backup/restore, or software upgrade status of an NE ..... 15-19

# LTE ePC alarm management

## 16 — Managing LTE ePC alarms 16-1

16.1 Managing LTE ePC alarms ..... 16-2
16.2 Additional resources ..... 16-2
16.3 Alarm management overview ..... 16-2
16.4 SGW and PGW alarm management ..... 16-3
16.5 9471 MME alarm management ..... 16-3
Viewing information about 9471 MME alarms ..... 16-3
Clearing 9471 MME faults and alarms ..... 16-3
16.6 5780 DSC alarm management ..... 16-3

# LTE ePC statistics management

## 17 — Collecting and managing LTE ePC statistics 17-1

17.1 LTE ePC statistics overview ..... 17-2
17.2 7750 MG statistics ..... 17-2
17.3 9471 MME statistics ..... 17-2
17.4 5780 DSC statistics ..... 17-4
17.5 LTE statistics configuration ..... 17-4
Procedure 17-1 To configure PM statistics synchronization on a redundant installation of the 5620 SAM ..... 17-4
17.6 LTE user bearer and SDF statistics ..... 17-5
Procedure 17-2 To collect LTE user statistics ..... 17-6
Procedure 17-3 To list and view LTE user statistics objects ..... 17-8
Procedure 17-4 To delete LTE user statistics queries ..... 17-9
LTE key performance and capacity indicators ..... 17-9
Procedure 17-5 To create a KPI/KCI monitoring policy ..... 17-10
Procedure 17-6 To define a KPI/KCI log file ..... 17-10
Procedure 17-7 To enable KPI/KCI statistics collection ..... 17-11

# Troubleshooting


## 18 — Troubleshooting LTE mobile services and EPS paths 18-1

18.1 Troubleshooting LTE mobile services and EPS paths ..... 18-2
STM OAM diagnostics for troubleshooting ..... 18-2
Supported STM OAM test types..... 18-2
Test scenarios..... 18-3
18.2 Workflow to troubleshoot a mobile service or EPS path connectivity problem..... 18-3
18.3 Troubleshooting mobile service or EPS path connectivity problems using the STM ..... 18-3
Procedure 18-1 To troubleshoot mobile service or EPS path connectivity problems using the STM ..... 18-4
Procedure 18-2 To configure and run an ICMP ping..... 18-6
Procedure 18-3 To configure and run an ICMP trace..... 18-8
Procedure 18-4 To view test suite results for mobile services or EPS paths ..... 18-10


# Appendices


## A. 7750 MG Release 3.0 statistics counters A-1

A.1 7750 MG Release 3.0 statistics counters..... A-2

## B. 9471 MME statistics counters B-1

B.1 9471 MME PM statistics counters..... B-2

# *Getting started*

**1 — 5620 SAM LTE ePC workflows**

**2 — LTE ePC management using the 5620 SAM**

**3 — 5620 SAM LTE ePC features and functionality**

# 1 — 5620 SAM LTE ePC workflows


**1.1 5620 SAM LTE ePC workflow overview** *1-2*

**1.2 Workflow for general management tasks** *1-3*

**1.3 Workflow for LTE ePC-specific management tasks** *1-3*

## 1.1 5620 SAM LTE ePC workflow overview

The 5620 SAM LTE ePC workflow comprises general and LTE-specific 5620 SAM network, network element, and service management tasks.

The general workflow includes the high-level tasks that can be performed using the 5620 SAM, as described in the *5620 SAM User Guide*. Figure 1-1 shows the high-level workflow. Section 1.2 describes the general tasks that are required to commission, configure, deploy, and manage services.

**Figure 1-1 General network workflow for life-cycle management**

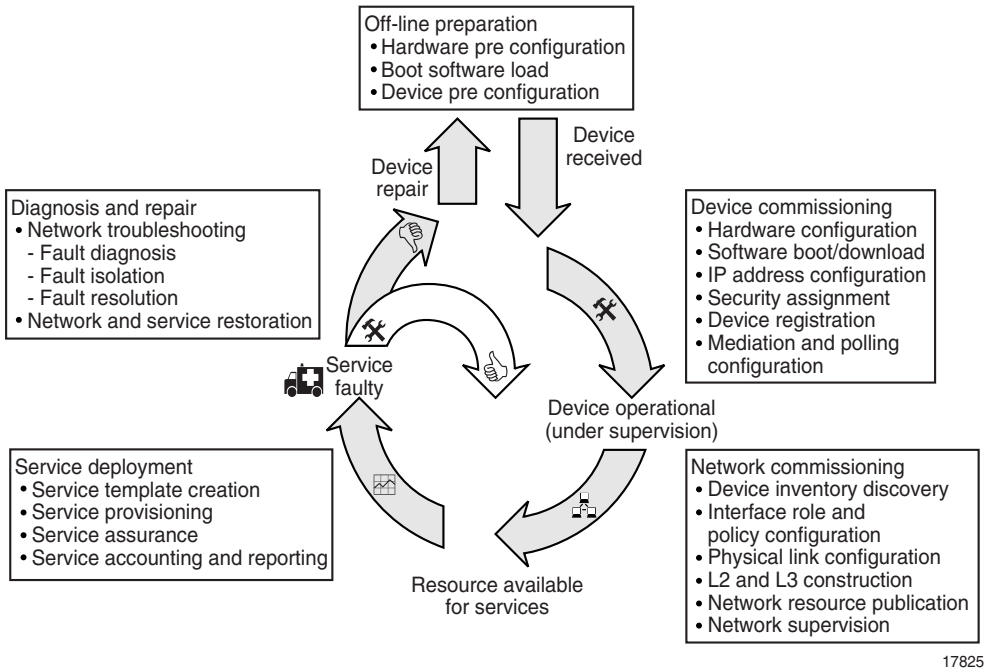


The LTE network life-cycle management follows the general workflow, but includes tasks that pertain specifically to the management of the LTE mobile core. LTE-specific tasks, such as how to configure, manage, and troubleshoot LTE ePC NEs, EPS paths, and LTE mobile services are described in the workflow in section 1.3.

## 1.2 Workflow for general management tasks

1. Install the 5620 SAM software, as described in the *5620 SAM | 5650 CPAM Installation and Upgrade Guide*.
2. See the workflow in the *5620 SAM User Guide* for guidance about general management tasks, such as how to:
   - use basic 5620 SAM applications that are included in the 5620 SAM GUI
   - perform basic administrative tasks for the security, database management, and redundancy of the 5620 SAM system
   - configure and manage non-LTE specific NEs in your network
   - configure and manage the physical topology and routing for your network
   - configure and distribute policies using 5620 SAM policy management engine
   - use the alarm table to manage faults
3. For the LTE-specific tasks that are discussed in this guide, see section 1.3.

## 1.3 Workflow for LTE ePC-specific management tasks

1. Review the 5620 SAM LTE features and functions.
2. Perform commissioning, mediation, and discovery for each of the following NEs:
   - **i** 7750 MG
   - **ii** 9471 MME
   - **iii** 5780 DSC
3. Perform the following 7750 MG equipment configuration tasks:
   - **i** Configure a ISM mobile card.
   - **ii** Create mobile regions.
   - **iii** Configure LTE profiles and policies.
   - **iv** Configure the SGW and PGW instances, including the following:
     - mobile region selection
     - signaling, including interfaces and profiles
     - reference points, including interfaces and profiles
   - **v** Set the Administrative State parameter for the SGW and PGW instances to Up.
   - **vi** Configure the ISA-MG groups.
4. Configure the 9471 MME and 5780 DSC equipment:
   - **i** Configure the 9471 MME. See the 9471 MME documentation suite.
   - **ii** Start the 9471 MME MI GUI and Provisioning GUI from the 5620 SAM.

iii Configure the 5780 DSC. See the 5780 DSC documentation suite.

iv Start the 5780 DSC GUI from the 5620 SAM.

5 Configure physical links from eNodeBs to other NEs.

6 Create a mobile service.

7 Configure correlation between the EPS paths and the underlying transport layer using drill-down hints.

8 Monitor the LTE equipment and services:

a View the NE properties forms such as:

- SGW instance, application, and interface properties forms
- PGW instance, application, and interface properties forms
- 9471 MME instance, application, and interface properties forms and the equipment navigation tree
- 5780 DSC instance, application, and interface properties forms and the equipment navigation tree

b Monitor the EPS peers and paths using the properties forms for each type of supported peer or path.

c Monitor profiles and policies.

d Use the EPS path topology map to monitor the health of EPS paths.

9 Track network performance and equipment usage using performance statistics counters for the following NEs:

- SGW and PGW
- 9471 MME

10 Troubleshoot LTE equipment and services:

a Use the alarms table to identify and troubleshoot EPC NEs, EPS paths, and mobile services.

b Use the faults tab in the EPC NEs, EPS paths, and mobile services properties forms to identify errored components and to navigate to alarm information.

c Use the drill-down operation to access the alarm and state information about the transport layer that underlies an EPS path.

d Troubleshoot connectivity on a mobile service or an EPS path using ICMP ping and ICMP trace.

# 2 — LTE ePC management using the 5620 SAM


**2.1 5620 SAM LTE NE management solution overview** *2-2*

**2.2 Supported 5620 SAM LTE NE management functions** *2-5*

**2.3 5620 SAM LTE path and mobile service management overview** *2-7*

## 2.1 5620 SAM LTE NE management solution overview

The 5620 SAM LTE NE management solution focuses on the equipment, configuration, fault, and state management of the ePC NEs, LTE interfaces, and mobile services that are used for mobile backhaul.

The 5620 SAM LTE NE management solution also supports the correlation of the LTE interfaces and mobile services with the underlying network transport layer to provide enhanced multi-layer monitoring and troubleshooting capabilities.

The 5620 SAM LTE NE management solution is comprised of the following components:

- 5620 SAM
- 5620 SAM LTE ePC
  - 7750 MG SGW
  - 7750 MG PGW
  - 9471 MME
  - 5780 DSC
- 5620 SAM LTE RAN (also known as the eUTRAN)
  - eNodeB

Figure 2-1 shows the 5620 SAM LTE NEs components and EPS interfaces that are managed in a typical LTE network.

**Figure 2-1 5620 SAM LTE NE components and EPS interfaces**

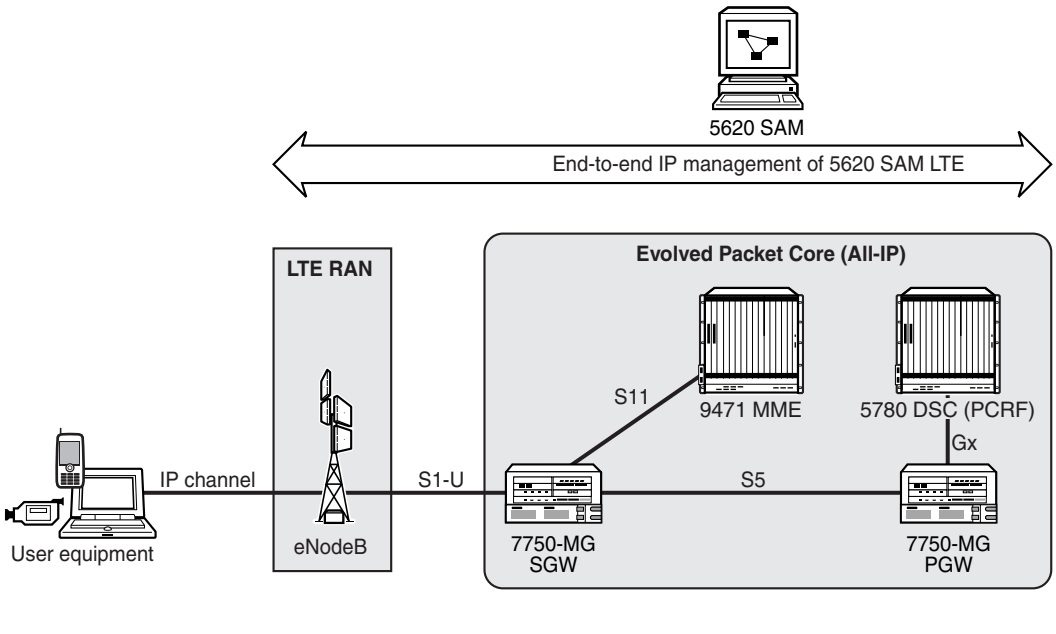

## 5620 SAM

The Alcatel-Lucent 5620 SAM enables integrated element, network and service-aware management of the products not only within the evolved packet core, but it also extends out to the radio access network (eNodeB), providing operators with an end-to-end IP management within the eUTRAN, backhaul and core networks. The 5620 SAM manages both the mobile layer (bearers, QoS of traffic flows, GTP/PMIP tunnels) and the underlying transport layer attributes (bandwidth, pseudowires, LSPs) to provide cross-layer coordination and correlation.

The 5620 SAM also features enhanced advanced monitoring and service assurance capabilities to simplify the management of IP/MPLS-based networks. In particular, its automated troubleshooting functionality integrates physical, network routing and service topologies to simplify the process of fault isolation, minimizing service interruptions and reducing the possibility of human error.

Through a powerful, standards-based OSS interface, the 5620 SAM provides open, standards-based interfaces that easily adapt to their existing OSS environments for faster and more cost-effective integration.

To further enhance their service assurance capabilities, mobile operators can deploy the 5620 SAM along with the Alcatel-Lucent 5650 Control Plane Assurance Manager, which enables operators to proactively assure network and service availability against control plane misconfigurations, malfunctions and undetected routing updates. The 5650 CPAM offers real-time control plane visualization, proactive control plane surveillance, configuration validation and control plane diagnosis. In addition, by seamlessly integrating with the 5620 SAM, the Alcatel-Lucent 5650 CPAM gives carriers unprecedented manageability by unifying service, routing, MPLS and physical infrastructure management.

## 5620 SAM LTE ePC

The 5620 SAM LTE ePC is an all-IP mobile core network for the LTE, and is a converged framework for packet-based real-time and non-real-time services. LTE is end-to-end all-IP: from mobile handsets and other terminal devices with embedded IP capabilities, over IP-based eNodeB, across the ePC and throughout the application domain.

The 5620 SAM LTE ePC is comprised of the following four components, each of which is defined by 3GPP standards.

### 7750 MG SGW

The 7750 MG SGW is a data plane element in the LTE network whose primary function is to manage user-plane mobility, and act as a demarcation point between the 5620 SAM RAN and the core network.

### 7750 MG PGW

The 7750 MG PGW is the termination point of the packet data interface towards the PDN. The 7750 MG PGW, which is the anchor point for sessions towards the external PDN, supports:

- policy enforcement, such as operator-defined rules for resource allocation and usage
- packet filtering, such as deep packet inspection for application type detection
- charging support, such as per-URL charging

### 9471 MME

The 9471 MME performs the signaling and control functions to manage the UE access to network connections, the assignment of network resources, and the management of the mobility states to support tracking, paging, roaming, and handovers. The 9471 MME controls all control-plane functions that are related to subscriber and session management. The 9471 MME supports the following functions:

- security procedures—end-user authentication as well as initiation and negotiation of ciphering and integrity protection algorithms
- terminal-to-network session handling—signaling procedures that are used to set up packet data context and negotiate associated parameters such as QoS
- idle terminal location management—tracking the area update process that is used to allow the network to join terminals for incoming sessions

### 5780 DSC

The Alcatel-Lucent 5780 DSC is a carrier-grade platform that provides the Policy and Charging Rules Function for 3G packet core and 4G evolved packet core networks according to the 3GPP Release 7 and 8 specifications.

The 5780 DSC allows service providers to manage and control network behavior based on their business rules, application requirements, network status, and subscriber entitlement and preferences. After these decisions are implemented, they are instantiated and enforced in the network as a set of network policies.

The 5780 DSC supports the following functions:

- provides the dynamic link between the data and user layer, and the application and subscriber layer
- authorizes the network connections and flow, and determines charging information
- determines and binds the required QoS policy
- determines the flow and charging rules during UE connections, including detection and policy control
- accepts AF requests for media components and charging
- notifies the AF about network events
- provides roaming support of the ePC solution
- allows operator control of subscription support, service assurance, and charging

### 5620 SAM LTE RAN

The 5620 SAM LTE RAN focuses on the discovery, configuration, and management of RAN devices such as the eNodeB. The 5620 SAM provides an end-to-end management solution of the all-IP LTE domain by managing RAN UE access points in addition to the ePC mobile backhaul.

The 5620 SAM LTE RAN eNodeB, which reside outside of the ePC in the RAN, provides the user plane and control plane protocol terminations for user equipment. The eNodeB use the S1-MME interface to connect to the 9471 MME and the S1-U interface to connect to the 7750 MG SGW.

See the *5620 SAM LTE RAN User Guide* for all functionality supported by the 5620 SAM.

### 5620 SAM LTE 3GPP reference points

LTE reference points, as shown in Figure 2-1, are based on the 3GPP standards and are created automatically when LTE peer devices are signaled. The following peers and reference points are supported in the 5620 SAM Release 8.0:

- eNodeB to 7750 MG SGW (S1-U)
- 7750 MG SGW to 7750 MG PGW (S5)
- 7750 MG SGW to 9471 MME (S11)
- 7750 MG PGW to 5780 DSC (Gx)
- 7750 MG PGW or 7750 MG SGW to CCF (Rf)

## 2.2 Supported 5620 SAM LTE NE management functions

The Alcatel-Lucent 5620 SAM, along with the 5650 CPAM, provides comprehensive element and end-to-end IP management for the Alcatel-Lucent ePC NEs, LTE interfaces, and mobile services that are used for mobile backhaul.

Table 2-1 lists the 5620 SAM LTE NE management functions that are supported by the 5620 SAM.

**Table 2-1 LTE management functions supported by the 5620 SAM**

| LTE NE management support | Discovery and mediation | Equipment | Configuration | Performance | State | Fault and alarm |
|---|---|---|---|---|---|---|
| **5620 SAM LTE ePC** | | | | | | |
| 7750 MG SGW | ✓ | ✓ | ✓ | ✓ | ✓ | ✓ |
| 7750 MG PGW | ✓ | ✓ | ✓ | ✓ | ✓ | ✓ |
| 9471 MME | ✓ | ✓ | | ✓ | ✓ | ✓ |
| 5780 DSC | ✓ | ✓ | | | ✓ | ✓ |
| **5620 SAM LTE RAN (see the *5620 SAM LTE RAN User Guide*)** | | | | | | |
| eNodeB | ✓ | ✓ | ✓ | ✓ | ✓ | ✓ |

## Supported 5620 SAM LTE ePC management functionality

This section outlines the capabilities of service-aware network management in the context of the four components that comprise the 5620 SAM LTE ePc. Theseinclude:

### Alcatel-Lucent 7750 MG SGW and 7750 MG PGW

The 5620 SAM supports the discovery and management of the 7- or 12-slot 7750 MG. The 7750 MG can be configured as an SGW or a PGW in the LTE network. You can use the 5620 SAM to configure, view, and manage the following:

- chassis and shelf
- card slots, cards, and MDAs
- ISA-MG groups
- mobility regions
- one SGW or PGW instance per 7750 MG
- control bearer reference points, such as S1-U, S11, S5, and Gx
- gateway interface and application functions
- diameter, diameter peer, and GTP profiles
- QCI policies
- status, statistics, and state management of faults associated with bearer paths and peers
- alarms and fault management
- performance management data

### 9471 MME

The 5620 SAM supports the discovery and management of single-shelf and multi-shelf configurations on the 9471 MME chassis. You must use the MI and Provisioning GUIs that run on the 9471 MME to configure the 9471 MME. You can start the 9471 MME GUIs from the 5620 SAM GUI. You can use the 5620 SAM to view the following:

- chassis and shelf
- card slots and cards, including OAM, MME Interface Function, MME Application Function, shelf management, and hub cards
- MME Interface Function and MME Application Function hosts and services
- card redundancy
- alarms and fault management
- performance management data and statistics

### 5780 DSC

The 5620 SAM supports the discovery and management of the 5780 DSC. Configuration management for the 5780 DSC is performed from the 5780 DSC GUI that runs on the 5780 DSC platforms. You can start the 5780 DSC GUI from the 5620 SAM.

You can use the 5620 SAM to view the following:

- chassis and shelf
- card slots and cards
- card redundancy
- alarms and fault management
- geo-redundant nodes

### Supported 5620 SAM LTE RAN management functionality

The 5620 SAM LTE RAN focuses on the discovery, configuration, and management of RAN devices such as the eNodeB. eNodeB management by the 5620 SAM is significantly different in terms of functionality and the management paradigm. Traditionally, the 5620 SAM takes what can be considered a passive role in device management. That is, the device takes a dominant role and the 5620 SAM serves to monitor and assist the functionality of the network.

In relation to the eNodeB, the 5620 SAM management paradigm is reversed. The device takes a passive role to the 5620 SAM, which is fully capable of configuring and overriding device settings and configuration.

See the *5620 SAM LTE RAN User Guide* for all functionality supported by the 5620 SAM.

## 2.3 5620 SAM LTE path and mobile service management overview

The 5620 SAM LTE solution introduces the following concepts and tools for the management of LTE ePC NEs, interfaces, and services.

### EPS paths

The nodes in the ePC and the eNodeB are connected by interfaces that correspond topologically to the LTE reference points. The 5620 SAM-managed point-to-point connections between EPS peers are known as EPS paths.

The 5620 SAM allows you to view the peers, perform the drill-down operation, and view the faults that are associated with each instance of an EPS path. You can use the Manage→Mobile Core command from the 5620 SAM main menu or the EPS path topology map to view the properties of EPS paths.

## EPS paths topology map

The EPS path topology map is a management tool that displays an aggregated representation of the mobile network objects and EPS paths that the 5620 SAM supports. The topology map provides the following:

- real-time alarm status for all of the EPS paths that the 5620 SAM monitors
- quick access to the properties forms for EPS paths and the 9471 MME, 7750 MG, and the 5780 DSC. The properties forms, in turn, provide access to the configuration, state, performance data, and fault information associated with each managed logical or physical component.

## Mobile service

A mobile service represents the connectivity between LTE network components and is comprised of the eNodeB, 7750 MG SGW, 7750 MG PGW, and other supporting NEs. The NEs are joined by S1-U and S5 EPS paths.

The 5620 SAM uses a mobile service to provide a view of the individual service paths that are available from an eNodeB to the 7750 MG SGW and 7750 MG PGW. You can view information about each service path from the eNodeB to the 7750 MG PGW and get information about the configuration, state, performance, and faults associated with each path.

The EPS paths and peer sites associated with a mobile service have been integrated into the 5620 SAM Service Test Manager to provide ping and trace tools to monitor the paths from an eNodeB to a 7750 MG PGW. These tools can also be used for on-demand testing of an EPS path when you need to debug an eNodeB connectivity problem.

## Transport layer correlation

The 5620 SAM can automatically correlate the underlying transport path between NEs with the overlying EPS path. The correlation mechanism is based on information that you configure about the network transport topology. The correlation mechanism is referred to as the drill-down operation; the transport layer information that you configure for an EPS path is referred to as a drill-down hint.

This drill-down operation provides you with the alarm and state information about the transport path and simplifies the root cause analysis for problems that may occur on an EPS path.

### 5620 SAM LTE end-to-end IP management

The 5620 SAM LTE, Release 8.0 management solution provides end-to-end IP management of the mobile and transport layers of the LTE network. Figure 2-2 shows the LTE and transport components that can be managed by the 5620 SAM.

**Figure 2-2 LTE mobile core and transport components managed by the 5620 SAM**

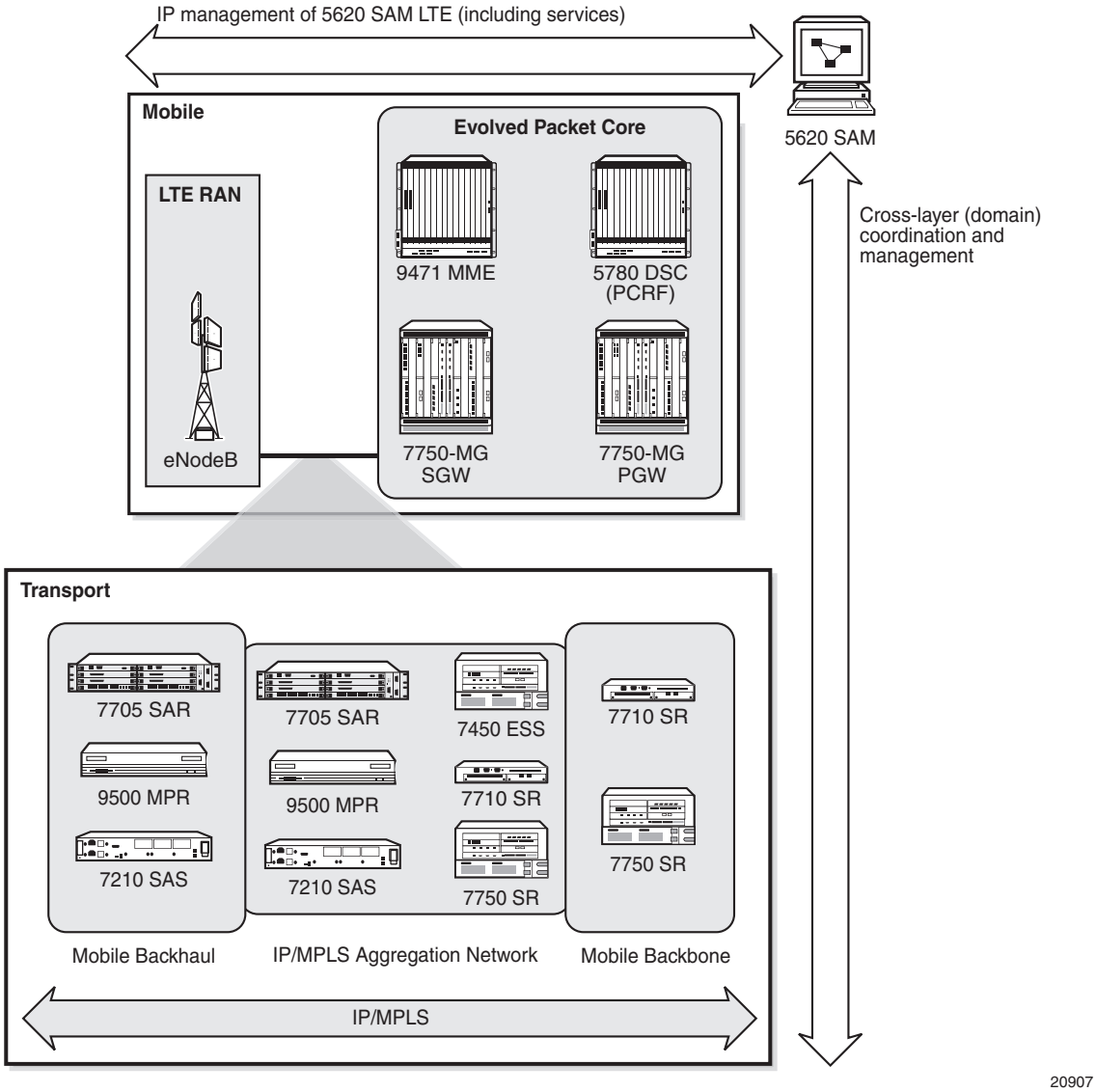

# 3 — 5620 SAM LTE ePC features and functionality


**3.1 LTE ePC features for 5620 SAM Release 9.0** *3-2*

**3.2 LTE ePC features for 5620 SAM Release 8.0** *3-2*

## 3.1 LTE ePC features for 5620 SAM Release 9.0

Table 3-2 lists the 5620 SAM LTE ePC features or functionality added in the 5620 SAM Release 9.0.

**Table 3-1 5620 SAM Release 9.0 LTE ePC functionality**

| Feature of function | Description | Reference for more information |
|---|---|---|
| **Release 9.0 R1 LTE ePC features** | | |
| 7750 MG support | **Equipment management**<br>The 5620 SAM supports the 7750 MG, Release 3.0 or later.<br>The 5620 SAM supports IPv6 addresses on IP packet reassembly interfaces.<br>**Security**<br>The 5620 SAM supports a new scope of command role, the EPC Operator. The new role has read and write permission on all EPC classes.<br>**Statistics**<br>The 5620 SAM supports aggregated MG card peer statistics. The aggregated statistics are identified in the statistics table listing with a card slot value of 0. The non-aggregated peer statistics for each card are identified by a card slot value between 1 and 12. Realtime statistics collection is not supported for the aggregated statistics records. Aggregated statistics provide a global view of session counts, throughput, and other performance data across the MG SGW and PGW peers.<br>The 5620 SAM supports the application of user-created filters to define the scope of user statistics queries.<br>**Lawful intercept**<br>The 5620 SAM supports LI on an LTE ePC gateway. | —<br><br><br><br>See the 5620 SAM User Security chapter in the *5620 SAM User Guide*.<br><br>—<br><br><br><br><br><br><br>See Procedure 17-2 for information about collecting user statistic.<br><br>See Lawful Intercept in section 14.1, and Procedures 14-18 and 14-19 for information about configuring LI policies. |
| 5780 DSC support | **Equipment management**<br>The 5620 SAM supports the 5780 DSC, Release 3.0 or later. | — |

## 3.2 LTE ePC features for 5620 SAM Release 8.0

Table 3-2 lists the 5620 SAM LTE ePC features or functionality added in the 5620 SAM Release 8.0.

**Table 3-2 5620 SAM Release 8.0 LTE ePC functionality**

| Feature or function | Description | Reference for more information |
|---|---|---|
| **Release 8.0 R7 LTE ePC features** | | |

**(1 of 6)**

| Feature or function | Description | Reference for more information |
|---|---|---|
| 9471 MME configuration requirements | In previous versions of the 5620 SAM, it was necessary to configure the V3TrapForwardingTable.xml file in order to manage 9471 MME's before discovery by the 5620 SAM. This is no longer a requirement. The procedure related to configuring the V3TrapForwardingTable.xml file has been removed from this guide. | — |
| 9471 MME Gr and IuPS interface support | The 5620 SAM now supports the viewing of 9471 MME Gr and IuPS interfaces as per the existing EPC reference points. | See Procedures to 7-3 for information about viewing 9471 MME reference point interfaces. |
| 9471 MME MPH service support | The 5620 SAM now supports the viewing of MPH services in this release. The MPH service terminates the external signalling SCTP, UDP, and TCP stacks to offload the MIF service from this function. | See Procedures 7-6 for information about viewing 9471 MME packet handler properties. |
| 9471 MME alarms | Additional 9471 MME alarms have been added for EMS support. | *5620 SAM LTE Alarm Reference* |
| 9471 MME multi-shelf configuration support | The 5620 SAM now supports multi-shelf 9471 MME configurations. Multi-shelf 9471 MME configurations provide task load balancing and redundancy. | — |
| **Release 8.0 R5 LTE ePC features** | | |
| 7750 MG support | **Configuration management**<br>The 5620 SAM now supports the inheritance of home profiles, roaming profiles, and visiting profiles from the gateway.<br>You can also configure the PLMN list profile and assign it to the PGW.<br>The 7750 MG supports ISM Mobile cards that provide the SGW and PGW functionality. The cards fits into the IOM slots on the 7750 MG. You can also configure a second ISM card per ISM Group to provide redundancy inside the group.<br>The GTP profile can be used to configure the GTP control plane between the following entities:<br>• SGW and PGW signaling<br>• SGW and PGW over the S5 interface<br>• SGW and MME over the S11 interface<br>The GTP profile can also be used to configure the GTP user plane between the following entities:<br>• eNodeB and SGW over the S1-U interface<br>• SGW and PGW over the S5 interface<br>**Performance management**<br>You can use a 5620 SAM GUI or OSS client to collect KPI and KCI statistics from both the S and PDN gateways. You can configure PM job names, start and end times, the actual data (MIB table) to be collected, as well as the frequency of collection. The collected stats are written to an XML file on the NE. | See chapter 6 for information about configuring LTE gateways.<br>See chapter 14 for more information about PLMN list profiles.<br>See chapter 5 for more information about ISM Mobile cards.<br>See chapter 17 for more information about KPI and KCI statistics. |
| 7750 MG IP packet reassembly support | In some networks, IP packet fragmentation may occur due to bandwidth limitations or the design of the network. To facilitate IP packet reassembly on the 5620 SAM, you can configure a new ISA IP Reassembly MDA on the second daughter card slot of a ISM mobile card. IP Packet reassembly can only performed on 7750 MG devices. | See chapter 6 for information about configuring the IP packet reassembly feature. |

**(2 of 6)**

| Feature or function | Description | Reference for more information |
|---|---|---|
| 7750 MG LAG support | The 5620 SAM LTE now supports the configuration of network LAGs and access LAGs on Release 8.0 R5 and later of the 7750 MG. | See chapter 6 for information about configuring LAGs on a 7750 MG. |
| LTE ePC parameter descriptions | A new guide has been developed that consolidates all LTE ePC and LTE RAN parameters supported by the 5620 SAM. | *5620 SAM LTE Parameter Reference* |
| LTE ePC alarm description tables | A new guide has been developed that consolidates all LTE ePC and LTE RAN alarms that can be reported in the 5620 SAM GUI. | *5620 SAM LTE Alarm Reference* |
| **Release 8.0 R3 LTE ePC features** | | |
| 7750 MG support | **Fault, alarm, and state management**<br>The 5620 SAM fault and alarm management supports the propagation of alarms related to the underlying components of an EPS path, such as physical links and SAPs, as aggregated alarms of the EPS path.<br>**Configuration management**<br>The 5620 SAM supports the configuration of APNs on a PGW.<br>The 5620 SAM supports the following profile types:<br>• SGW charging profile<br>• PGW charging profile<br>Charging profiles are applied to PGWs and SGWs.<br>**Performance management**<br>The 5620 SAM supports the ability to plot SGW and PGW statistics as a graph using the 5620 SAM statistics plotter. The plotter can display multiple performance, accounting, and server performance statistics simultaneously using dual axes. The plotter also provides a numerical value for each point on the graph. | See chapter 16 for information about managing 7750 MG alarms.<br>See chapter 6 for information about configuring SGWs and PGWs.<br>See Procedures 14-12 to 14-15 for information about configuring profiles and policies.<br>See the *5620 SAM Statistics Management Guide* for information about using the statistics plotter. |
| 9471 MME support | **Equipment management**<br>The 5620 SAM equipment tree includes the shelf PDU.<br>**Fault, alarm, and state management**<br>The fault and alarm management capabilities of 5620 SAM include new alarms generated by the 9471 MME interfaces and application instances.<br>**Configuration management**<br>The 5620 SAM supports the download of 9471 MME software from the 5620 SAM server to the 9471 MME, using an 9471 MME-specific software upgrade policy.<br>An operator requires the GUI Cross Launch scope of command permission to view the 9471 MME MI GUI | See section 2.1 for an overview of the 9471 MME functions in the LTE network.<br>See chapter 4 for information about mediation and discovery of the 9471 MME.<br>See chapter 5 for information about starting the 9471 MME MI GUI.<br>See chapter 7 for information about viewing 9471 MME properties.<br>See the *5620 SAM User Guide* for information about scope of command roles.<br>See chapter 15 for information about downloading 9471 MME software.<br>See chapter 16 for information about managing 9471 MME alarms.<br>See chapter 17 for information about 9471 MME statistics. |

**(3 of 6)**

| Feature or function | Description | Reference for more information |
|---|---|---|
| 5780 DSC support | **Equipment management**<br>The 5620 SAM equipment tree includes 5780 DSC PCRF service groups and members.<br>The 5620 SAM supports the 5780 DSC 2.0 R1 on an ATCA chassis.<br>**Fault, alarm, and state management**<br>The 5620 SAM provides the availability status of a 5780 DSC instance, DPA, PCRF, and PCRF group object.<br>**Configuration management**<br>An operator requires the GUI Cross Launch scope of command permission to view the 5780 DSC GUI. | See section 2.1 for a overview of the 5780 DSC functions in the LTE network.<br>See chapter 4 for information about mediation and discovery of the 5780 DSC.<br>See the *5620 SAM User Guide* for information about scope of command roles.<br>See chapter 5 for information about starting the 5780 DSC GUI.<br>See chapter 8 for information about viewing 5780 DSC properties. |
| LTE user statistics management | The 5620 SAM supports on-demand collection and viewing of performance statistics on a per-user and user connection basis. A query can be filtered using the IMSI, APN name, bearer ID, and SDF criteria. | See chapter 17 for information about using the LTE User Query Manager and viewing LTE user statistics. |
| Transport and mobile service layer integration | The 5620 SAM EPS drill-down feature, which automatically discovers the underlying transport path between network elements, supports partial success of a drill-down operation. If any segment within a hint fails to discover components, an alarm is generated and the degree of success of the drill-down is indicated in the Hint Matching Level field. | See chapter 12 for information about using EPS path hints and drill-down operation to manage the health of an EPS path. |
| Mobile service | The 5620 SAM uses a mobile service to provide an operator with a view of the individual service paths that are available from an eNodeB to the attached SGW and PGW. The 5620 SAM supports the automatic creation and dynamic updating of mobile services. Previously, mobile services were manually created and updated by the user.<br>In order to allow the creation of mobile services the 5620 SAM supports unmanaged mobile NEs. The first unmanaged mobile NE was the eNodeB. The 5620 SAM adds support a PGW as an unmanaged NE, for situations where a PGW is part of a mobile service but is not managed by the 5620 SAM. | See chapter 13 for information about a mobile service.<br>See chapter 18 for information about troubleshooting a mobile service. |

**(4 of 6)**

| Feature or function | Description | Reference for more information |
|---|---|---|
| **Release 8.0 R1 LTE ePC features** | | |
| 7750 MG support | **Equipment management**<br>The 5620 SAM equipment tree and physical topology map are extended to include the 7750 MG network elements.<br>**Fault, alarm, and state management**<br>The fault and alarm management capabilities of the 5620 SAM are extended to include new alarms for the SGW and PGW application instances. The 5620 SAM alarm correlation capability helps an operator determine the root cause of a fault within the 7750 MG.<br>The 5620 SAM state management capability is extended to include the new hardware associated with the SGW and PGW application instances.<br>**Configuration management**<br>The 5620 SAM supports the configuration of the ISA-MG cards which the SGW and PGW application instances run on. The 5620 SAM also supports profile-based configuration of the SGW and PGW. Each 7750 MG supports one SGW or PGW instance. The 5620 SAM supports the following policy and profile types:<br>• system limit profile<br>• QCI policies<br>• GTP profiles<br>• diameter profile<br>• diameter peer profile<br>**Performance management**<br>The 5620 SAM collects, stores, and manages performance statistics generated by the 7750 MG platform and associated SGW and PGW application instances. The statistics are also available to northbound OSS clients via 5620 SAM-O. | See section 2.1 for an overview of the 7750 MG functions in the LTE network.<br>See chapter 4 for information about mediation and discovery of the 7750 MG.<br>See chapter 5 for information about configuring and managing LTE equipment.<br>See chapter 6 for information about configuring SGWs and PGWs.<br>See chapter 14 for information about configuring profiles and policies.<br>See chapter 16 for information about managing 7750 MG alarms.<br>See chapter 17 for information about 7750 MG statistics. |
| 9471 MME support | **Equipment management**<br>The 5620 SAM equipment tree and physical topology map are extended to include the 9471 MME network element.<br>**Fault, alarm, and state management**<br>The fault and alarm management capabilities of 5620 SAM are extended to include new alarms generated by the 9471 MME interfaces and application instances. The 5620 SAM alarm correlation capability helps an operator determine the root cause of a fault within the 9471 MME.<br>The 5620 SAM state management capability is extended to include the new hardware associated with the 9471 MME application instance.<br>**Configuration management**<br>The 5620 SAM provides access to the configuration and MI GUIs which are hosted on the 9471 MME platform. An operator can start the MME GUIs from the 5620 SAM GUI.<br>**Performance management**<br>The 5620 SAM collects, stores, and manages performance statistics generated by the 9471 MME platform, and associated MME interface and application instances. The statistics are also available to northbound OSS clients via the 5620 SAM-O. Statistical data can be retrieved in 3GPP compliant format. | See section 2.1 for a overview of the 9471 MME functions in the LTE network.<br>See chapter 4 for information about mediation and discovery of the 9471 MME.<br>See chapter 7 for information about viewing 9471 MME properties.<br>See chapter 16 for information about managing 9471 MME alarms.<br>See chapter 17 for information about 9471 MME statistics. |

**(5 of 6)**

| Feature or function | Description | Reference for more information |
|---|---|---|
| 5780 DSC support | **Equipment management**<br>The 5620 SAM equipment tree and physical topology map are extended to include the 5780 DSC network elements.<br>**Fault, alarm, and state management**<br>The fault and alarm management capabilities of 5620 SAM are extended to include new alarms generated by the 5780 DSC. The 5620 SAM alarm correlation capability helps an operator determine the root cause of a fault within the 5780 DSC.<br>The 5620 SAM state management capability is extended to include the new hardware associated with the 5780 DSC application instance.<br>**Configuration management**<br>The 5620 SAM provides access to the 5780 DSC configuration GUI which is hosted on the 5780 DSC platform. The operator can start the 5780 DSC GUI from the 5620 SAM GUI. | See section 2.1 for a overview of the 5780 DSC functions in the LTE network.<br>See chapter 4 for information about mediation and discovery of the 5780 DSC.<br>See chapter 8 for information about viewing 5780 DSC properties.<br>See chapter 16 for information about managing 5780 DSC alarms. |
| EPS path topology map | The 5620 SAM provides a summarized topology view of the mobile network. The topology view provides real-time alarm status feedback to an operator for the EPS paths (for example S1-U and S5) that the 5620 SAM monitors. The map also provides an operator with access to the underlying properties form for the individual EPS path and the logical instances supported by the 9471 MME, 7750 MG, and the 5780 DSC. The properties forms provide access to the configuration, state, performance data, and fault information associated with each managed logical or physical component. | See chapter 10 for information about the EPS path topology map.<br>See chapter 18 for information about troubleshooting an EPS path. |
| Transport and mobile service layer integration | The 5620 SAM automatically discovers, based on user-supplied hints, the underlying transport path between network elements and associates this transport path with the overlying EPS path. This mechanism provides an operator with alarm and state feedback on the health of the transport path, simplifying the root cause analysis for an EPS Path. | See chapter 12 for information about using EPS path hints and drill-down operation to manage the health of an EPS paths. |
| Mobile service | The 5620 SAM uses a mobile service to provide an operator with a view of the individual service paths that are available from an eNodeB to the attached SGW and PGW. An operator can view the relative health of each service path from the eNodeB to the PGW and can access the configuration, state, performance data, and faults information associated with each path.<br>In addition, the mobile service is integrated with the 5620 SAM STM capability, providing an operator with a powerful tool to monitor the paths from an eNodeB to a PGW. The tools can also be used for on-demand testing of an EPS path when an operator attempts to debug an eNodeB connectivity problem. | See section 2.1 for a overview of the eNodeB functions in the LTE network.<br>See chapter 5 for an overview of eNodeB functionality.<br>See chapter 13 for information about a mobile service.<br>See chapter 18 for information about troubleshooting a mobile service. |

**(6 of 6)**

# *LTE ePC device discovery*

**4 — 5620 SAM management configuration**

# 4 — 5620 SAM management configuration


**4.1 5620 SAM management configuration overview** *4-2*

**4.2 5620 SAM management configuration workflow** *4-3*

**4.3 5620 SAM management procedures** *4-3*

## 4.1 5620 SAM management configuration overview

The 5620 SAM can manage LTE NEs after the NEs have been configured and the 5620 SAM mediation and discovery rules have been applied. Table 4-1 lists where to find more information about how to configure NEs for discovery and management by the 5620 SAM.

**Table 4-1 5620 SAM NE configuration and discovery information**

| For more information about | See |
|---|---|
| Installation and upgrade | *5620 SAM \| 5650 CPAM Installation and Upgrade Guide* |
| System architecture | *5620 SAM System Architecture Guide* |
| Using the CLI from the 5620 SAM | *5620 SAM User Guide* |
| System and NE commissioning | |
| Discovery management | |
| In-band and out-of-band management | |

### Firewalls and file transfers

The 5620 SAM can use FTP or SCP to transfer data to and from managed NEs. Ports between 5620 SAM components and managed NEs, such as between a 5620 SAM main server and a managed 7750 MG, must be open through firewalls in order to allow communication between the managed NEs and the 5620 SAM.

The 7750 MG supports secure file transfers using SSH2. When SSH2 is correctly configured and the secure file transfer type is configured in the SSH2 mediation policy for the NE, SFTP, not FTP, is used to perform file transfers to and from the managed NEs. Table 4-2 lists where to find more information.

**Table 4-2 Firewall and file transfer information**

| For more information about | See |
|---|---|
| Firewalls and open ports | *5620 SAM Planning Guide* |
| FTP, SCP, and SSH2 | *5620 SAM User Guide* |

## 4.2 5620 SAM management configuration workflow

The following workflow lists the high-level steps required to prepare an NE for discovery and to configure the 5620 SAM to discover the NE.

1. Using the CLI, configure each NE that you need to discover and manage. The parameters that you must configure on each NE include:
   - system IP address
   - interfaces
   - Telnet and FTP servers
   - security
   - SNMP packet MTU size
2. Configure mediation policies on the 5620 SAM.
3. Discover the NEs.
   - **i** Create discovery rules.
   - **ii** Scan the network according to the discovery rules.
   - **iii** Check the discovery, management, and synchronization status of the NEs.
4. Create event notification policies, if required.
5. Assign event notification policies to NEs, if required.
6. Manage the NE discovery.
   - Modify discovery rules.
   - Add or modify rule elements.
   - Enable or disable discovery rules.
   - Remove discovery rules.
   - Rescan the network according to a discovery rule.
   - Manage or unmanage NEs.
   - Synchronize NEs with the 5620 SAM database.

## 4.3 5620 SAM management procedures

The following procedures describe how to configure LTE NEs and the 5620 SAM to enable the 5620 SAM to discover and manage the NEs.

### 7750 MG management by the 5620 SAM

Perform the following procedures to discover and manage a 7750 MG with the 5620 SAM.

## Procedure 4-1 To configure a 7750 MG for management by the 5620 SAM

See the appropriate NE documentation for more information about using the CLI.

1 Open a console window on the NE.

2 Type the following command at the prompt to configure the system address of the NE:

**configure router interface system address *xxx.xxx.xxx.xxx/mask*** ↵

where
*xxx.xxx.xxx.xxx* is the system IP address
*mask* is the bitmask

3 Choose the method of file transfer. Perform the following steps, as required:

a Type the following command at the prompt to enable Telnet:

**configure system security telnet-server** ↵

b Type the following command at the prompt to enable FTP:

**configure system security ftp-server** ↵

c Type the following command at the prompt to enable SSH2:

**configure system security ssh version 2** ↵

4 If required, type the following command at the prompt to enable console, FTP, and SNMP access for the appropriate user account on the NE:

**configure system security user *user_account* access console ftp snmp** ↵

where *user_account* is the appropriate user account for Telnet, FTP, and SNMP access; for example, admin

5 If required, type the following command at the prompt to enable hash encryption for passwords and authentication keys during NE configuration save or list operations:

**configure system security hash-control read-version *read-version* write-version *write-version*** ↵

where
*read-version* is the version of encryption accepted during read operations; for example, 1, 2, or all to indicate that both versions are accepted
*write-version* is the version of encryption used during write operations; for example, 1 or 2

Version 1 encryption uses a simple key algorithm that generates the same character string each time a specific password or authentication key is hashed.

Version 2 encryption uses a more complex key algorithm that generates a different character string each time it hashes a specific password or authentication key.

6 Type the following commands in sequence at the prompt to set the time zone and time:

**configure system time zone *time_zone -offset_from_UCT*** ↵

**admin set-time *YYYY/MM/DD hh:mm:ss*** ↵

where
*time_zone* is the appropriate time zone; for example, EST
*offset_from_UCT* is the offset, in hours, from the UCT
*YYYY/MM/DD hh:mm:ss* is the current local time

7 If required, perform one of the following to enable a time protocol.

a Type the following command at the prompt to enable NTP:

**configure system time ntp server-address *server_IP_address*** ↵

where *server_IP_address* is the IP address of the NTP server

b Type the following command at the prompt to enable SNTP:

**configure system time sntp server-address *server_IP_address*** ↵

where *server_IP_address* is the IP address of the SNTP server

8 Perform one of the following:

a To enable the SNMPv2, go to step 9.

b To configure SNMPv3 management on the NE, perform Procedure 4-2, and then go to step 10.

9 Type the following commands at the prompt to enable the SNMPv2 engine and to configure an SNMP community:

**configure system snmp no shutdown** ↵

**configure system snmp packet-size 9216** ↵

**configure system security snmp community *community_name* rwa version both** ↵

where *community_name* is the SNMPv2 community name

**Note 1 —** The command is used for the 5620 SAM write mediation policy. When you use SNMPv2, you must also use this mediation policy for read access, or create another mediation policy that is also configured for rwa.

**Note 2 —** The SNMPv2 community string name rwa attributes must be enabled for the 5620 SAM to correctly manage a node, even when the 5620 SAM is only used to monitor a network.

**10** Type the following commands in sequence at the prompt to ensure that the NE uses persistent SNMP indexes:

**bof persist on** ↵

**bof save** ↵

**11** Type the following commands at the prompt to save the configuration changes and reboot the NE:

**admin save** ↵

**admin synchronize boot-env** ↵

**admin reboot now** ↵

The NE initializes with SNMP communication enabled.

**12** Type the following commands in sequence at the prompt to ensure that the SNMP trap configuration is correct:

**configure log** ↵

**info** ↵

The output should be similar to the following:

```
snmp-trap-group 98
            description "5620sam"
            trap-target "xxx.xxx.xxx.xxx:162" address
xxx.xxx.xxx.xxx snmpv2c notify-community "privatetrap98"
            trap-target "yyy.yyy.yyy.yyy:162" address
yyy.yyy.yyy.yyy snmpv2c notify-community "privatetrap98"
        exit
        log-id 98
            from main security
            to snmp 1024
        exit
```

where

*xxx.xxx.xxx.xxx* is the IP address of the 5620 SAM main server in a standalone 5620 SAM configuration, or one of the two main servers in a redundant configuration

*yyy.yyy.yyy.yyy* is the IP address of the other 5620 SAM main server in a redundant 5620 SAM configuration

**13** Use a 5620 SAM client to discover the NE and to verify that the NE configuration allows the management of the NE. See Procedure 4-3 to configure a mediation and discovery policy for the NE on the 5620 SAM.

## Procedure 4-2 To configure a 7750 MG for management by the 5620 SAM using SNMPv3

SNMPv3 security is designed for user-based security and comprises secure authentication and communication. The access granted is restricted to the scope of the configured users and groups.

1 Open a CLI session on the managed NE if it is not already open.

2 Type the following commands to create a read-write-notify group for general SNMP mediation on the managed NE:

**configure system security snmp** ↵

**access group *snmpv3_groupname* security-model usm security-level privacy read iso write iso notify iso** ↵

where
*snmpv3_groupname* is the name that is being assigned to the SNMP group

3 If mediation of VPRN objects is required, type the following command to create a read-write-notify group on the managed NE:

**access group *snmpv3_groupname* security-model usm security-level privacy context vprn prefix read "vprn-view" write "vprn-view" notify "iso"** ↵

where
*snmpv3_groupname* is the name that is being assigned to the SNMP group

4 Type the following command to exit SNMP group configuration:

**exit** ↵

5 Type the following command to display the SNMP engine ID of the NE:

**show system info** ↵

The SNMP engine ID is displayed as SNMP Engine ID.

6 Generate an MD5 or SHA authentication key and DES privacy keys using the password2key utility on a 5620 SAM client or server station.

- MD5 and SHA authentication keys are used to create an encrypted authentication password for users. MD5 keys are 32-character strings. SHA keys are 40-character strings.
- DES privacy keys are used to encrypt the entire SNMP packet, for additional security.

i Log in to the 5620 SAM client or server station.

**Note 1 —** If you are using the password2key utility on a 5620 SAM server station, you must log in as the samadmin user.

**Note 2 —** If you are using the password2key utility on a 5620 SAM client station, you must log in as a local administrator, or as the user that installed the client.

**ii** Open a console window.

**iii** Navigate to the *install_directory*/nms/bin directory.

where *install_directory* is the 5620 SAM installation location, typically /opt/5620sam/server or /opt/5620sam/client on Solaris, and C:\5620sam\client on Windows

**iv** Run the password2key.bat or .bash utility to create an MD5 or SHA authentication key by typing:

**nmsclient.bat password2key *method password engine_ID*** ↵

where
*method* is the type of encryption algorithm used to generate the authentication key, MD5 or SHA
*password* is the ASCII password used to generate the authentication key for the SNMPv3 user; for example, yoga
*engine_ID* is the SNMP engine ID obtained in step 5

The SHA authentication key generated from this example is 60210e3d2bfa7e02682262df9c5de400b9c3322b.

**v** Run the password2key.bat or .bash utility to create an MD5 or SHA DES privacy key by typing:

**nmsclient.bat password2key *method password engine_ID*** ↵

where
*method* is the type of encryption algorithm used to generate the DES privacy key, MD5 or SHA
*password* is the ASCII password used to generate the DES privacy key; for example, happy
*engine_ID* is the SNMP engine ID obtained in step 5

The DES privacy key generated from this example is 4088f4ef966b8d1ebe54b8d841a5f76806c374ec.

**vi** If your security model requires unique keys for each managed NE, repeat steps 6iv and 6v for each set of keys to be generated.

**vii** Store the generated keys.

**7** Use the keys generated in step 6 to create an SNMPv3 user on the managed NE.

**i** Type the following sequence of commands at the prompt:

**configure system security user *snmpv3_username*** ↵

**access snmp** ↵

**snmp** ↵

**authentication *method authentication_key* privacy des-key *DES_privacy_key*** ↵

**group *snmpv3_groupname*** ↵

**exit all** ↵

where
*snmpv3_username* is the name being assigned to the SNMPv3 user
*method* is sha or md5, depending on the authentication method used
*authentication_key* is the SHA or MD5 authentication key generated in step 6
*DES_privacy_key* is the DES privacy key generated in step 6
*snmpv3_groupname* is the name of the new SNMP user group

**Note —** A DES privacy key is 32 characters. If SHA encryption, which produces a 40-character key is used to generate the DES privacy key in step 6, you must provide only the first 32 characters of the key, as shown in the following example that uses the key values from step 6:

```
authentication sha
60210e3d2bfa7e02682262df9c5de400b9c3322b privacy des
4088f4ef966b8d1ebe54b8d841a5f768 ↵
```

**ii** Type the following command at the prompt to save the configuration changes.

**admin save** ↵

## Procedure 4-3 To configure the 5620 SAM to discover and manage a 7750 MG

The 5620 SAM uses SNMPv2c or SNMPv3 to manage the 7750 MG. The following procedure describes the configuration of the mediation policy and discovery rule that can be used by the 5620 SAM to discover a 7750 MG. For information about configuring additional parameters in a mediation policy or discovery rule, see the Discovery Management chapter in the *5620 SAM User Guide*.

**1** Perform one of the following:

**a** To use SNMPv2 to manage the 7750 MG, go top step 2. For SNMPv2 configurations, the 5620 SAM uses the default SNMPv2c mediation security policy to discover the 7750 MG.

**b** To use SNMPv3 to manage the 7750 MG, go to step 3.

**2** Create a discovery rule for the 7750 MG on the 5620 SAM:

**i** Choose Administration→Discovery Manager from the 5620 SAM main menu. The Discovery Manager (Edit) form opens with the Discovery Rules tab displayed.

**ii** Click on the Create button. The Create Discovery Rule wizard opens.

**iii** In step 1 of the wizard, enter a name in the Description field to identify the discovery rule. Click on the Next button.

**iv** In step 2 of the wizard (Add Rule Elements), click on the Create button. The Topology Discover Rule Element (Create) form opens.

**v** Enter the 7750 MG management IP address as the rule element for the discovery rule and click on the Ok button. A warning dialog appears.

**vi** Click on the OK button to acknowledge the warning.

**vii** Click on the Finish button to save to close the Create Discovery Rule wizard. A warning dialog box appears.

**viii** Click on the OK button to acknowledge the warning. The Discovery Manager (Edit) form appears displaying the new discovery rule.

**ix** Click on the OK button.

**x** Go to step 6.

**3** Create an SNMPv3 user on the 5620 SAM.

**i** Choose Administration→Security→NE User Configuration from the 5620 SAM main menu. The NE User Configuration form opens.

**ii** Click on the Create button. The NE User, Global Policy (Create) form opens with the General tab displayed.

**iii** Configure the parameters:

- User Name—Enter the user name that was created using the CLI (snmpv3_username).
- Description
- Access—Choose the snmp option. The SNMPv3 tab appears in the NE User, Global Policy (Create) form.

**iv** Click on the SNMPv3 tab button.

**v** When a user has SNMPv3 permissions, you can configure the authentication parameters. Ensure that the SNMPv3 user and user group have been created on the managed NE. If MD5 or SHA authentication and DES privacy is used, ensure the keys have been created and associated with the managed NE and the SNMPv3 user group, as described in the *5620 SAM User Guide*. Configure the parameters:

- Authentication Protocol—Choose SHA as the authentication protocol
- Privacy Protocol—Choose DES as the privacy protocol
- New Authentication Password
- Confirm New Auth Password
- New Privacy Password
- Confirm New Privacy Password

**vi** Click on the OK button to save the change and close the NE User, Global Policy (Create) form.

**vii** Click on the Search button on the NE User Configuration form to confirm the creation of the new SNMPv3 user.

**4** Configure an SNMPv3 mediation security policy for the SNMPv3 user created in Step 3:

**i** Choose Administration→Mediation from the 5620 SAM main menu. The Mediation (Edit) form opens with the General tab displayed.

**ii** Click on the Mediation Security tab button.

**iii** Click on the Create button to create a mediation security policy. The Mediation Policy (Create) form opens.

**iv** Configure the Display Name parameter to identify the policy.

**v** Set the Security Model parameter to SNMP v3 (USM).

**vi** In the SNMP panel, set the Port parameter to 161.

**vii** In the SNMPv3 panel, click on the Select button. The Select User Mediation Policy form opens.

**viii** Select the SNMPv3 user created in step 3 and click on the Ok button. The user is added to the SNMPv3 panel on the Mediation Policy (Create) form.

**ix** Click on the Ok button to save the changes. A warning dialog appears.

**x** Click on the OK button to acknowledge the warning.

**xi** Click on the OK button to save the mediation security policy and close the Mediation (Edit) form.

**5** Create a discovery rule for the 7750 MG on the 5620 SAM.

**i** Perform steps 2 i to 2 vi in this procedure to initiate the creation of the discovery rule.

**ii** In step 3 of the wizard (the Configure Mediation Security step), click on the Select button and choose the mediation security policy that you created in step 4 for the Read Policy ID, Write Policy ID, and Trap Policy ID parameters.

**iii** Perform steps 2 vii to 2 x in this procedure to complete the creation of the discovery rule.

**6** Use the 5620 SAM client to discover the NE and to verify that the NE configuration allows management of the NE, as described in the *5620 SAM User Guide*.

## Procedure 4-4 To change from SNMPv2c management of a 7750 MG to SNMPv3 management

**Warning —** This procedure requires you to delete a managed device. Deleting a managed device results in the loss of management data and completely removes the device from the managed network.

**1** Unmanage and delete the device.

**i** Choose Administration→Discovery Manager from the 5620 SAM main menu. The Discovery Manager (Edit) form appears.

**ii** Click on the Managed State tab button.

**iii** Select the device from the list that you want to manage by using SNMPv3 and click on the Unmanage button. A confirmation dialog opens.

**iv** Click on the Yes button to confirm the action. The 5620 SAM attempts to unmanage the device.

**v** Verify that the device shows a Site State of Not Managed.

**vi** Reselect the unmanaged device from the list, if required, and click on the Delete button. A confirmation dialog opens.

**vii** Click on the Yes button to confirm the action. The device is deleted from the 5620 SAM network.

**viii** Close the Discovery Manager (Edit) form.

**2** Perform the following steps:

**i** Perform Procedure 4-2 to create SNMPv3 groups and users on the device.

**ii** Perform Procedure 4-3 to create a discovery rule with an SNMPv3 mediation security policy.

**Note —** You can modify the existing discovery rule with an SNMPv3 mediation security policy. However, you must create a new discovery rule for the deleted device if not all devices discovered by the same rule are changed to SNMPv3 management.

**3** Rediscover the device.

**i** Choose Administration→Discovery Manager from the 5620 SAM main menu. The Discovery Manager (Edit) form appears.

**ii** Click on the Discovery Rules tab button.

**iii** Select the discovery rule that was created in step 2 ii to discover the deleted device.

**iv** Click on the Rescan button. A confirmation dialog opens.

**v** Click on the Yes button to confirm the action.

**vi** Click on the Managed State tab button.

**vii** Verify that the device is discovered and managed by using SNMPv3.

**viii** Click on the OK button to close the Discovery Manager (Edit) form.

## 9471 MME management by the 5620 SAM

Perform the following procedures to discover and manage a 9471 MME with the 5620 SAM.

### Procedure 4-5 To configure the 5620 SAM to discover and manage a 9471 MME

The 5620 SAM can use SNMPv2c or SNMPv3 to manage the 9471 MME. The following procedure describes the configuration of a basic SNMPv2c and SNMPv3 mediation policy and discovery rule that can be used to discover a 9471 MME. For information about configuring additional parameters in a mediation policy or discovery rule, see the Discovery Management chapter in the *5620 SAM User Guide*.

**1** Perform one of the following:

**a** To use SNMPv2 to manage the 9471 MME, go to step 2.

**b** To use SNMPv3 to manage the 9471 MME, go to step 4.

**2** Configure an SNMPv2c mediation security policy on the 5620 SAM:

- **i** Choose Administration→Mediation from the 5620 SAM main menu. The Mediation (Edit) form opens with the General tab displayed.
- **ii** Click on the Mediation Security tab button.
- **iii** Click on the Create button to create a mediation security policy. The Mediation Policy (Create) form opens.
- **iv** Configure the Displayed Name parameter to identify the policy.
- **v** Set the Security Model parameter to SNMP v2c.
- **vi** In the SNMP panel, set the Port parameter to 8001.
- **vii** Click on the OK button to save the mediation security policy.

**3** Create a discovery rule for the 9471 MME on the 5620 SAM:

- **i** Choose Administration→Discovery Manager from the 5620 SAM main menu. The Discovery Manager (Edit) form opens with the Discovery Rules tab displayed.
- **ii** Click on the Create button. The Create Discovery Rule wizard opens.
- **iii** In step 1 of the wizard, enter a name in the Description field to identify the discovery rule. Click on the Next button.
- **iv** In step 2 of the wizard (Add Rule Elements), click on the Create button. The Topology Discover Rule Element (Create) form opens.
- **v** Enter the 9471 MME management IP address as the rule element for the discovery rule and click on the OK button. A warning dialog appears.
- **vi** Click on the OK button to acknowledge the warning.
- **vii** Click on the Finish button to save to close the Create Discovery Rule wizard. A warning dialog box appears.
- **viii** Click on the OK button to acknowledge the warning. The Discovery Manager (Edit) form appears displaying the new discovery rule.
- **ix** Click on the OK button.
- **x** Go to step 6.

**4** Configure an SNMPv3 mediation security policy on the 5620 SAM.

- **i** Choose Administration→Mediation from the 5620 SAM main menu. The Mediation (Edit) form opens with the General tab displayed.
- **ii** Click on the Mediation Security tab button. The Mediation Policy (Create) form opens.
- **iii** Set the Security Model parameter to SNMP v3 (USM).
- **iv** In the SNMP panel, set the Port parameter to 8001.
- **v** Click on the OK button to save the mediation security policy.

5 Create a discovery rule for the 9471 MME on the 5620 SAM.

   i Perform steps 3 i to 3 vi in this procedure to initiate the creation of the discovery rule.

   ii In step 3 of the wizard (the Configure Mediation Security step), click on the Select button and choose the mediation security policy that you created in step 4 for the Read Policy ID, Write Policy ID, and Trap Policy ID parameters.

   iii Perform steps 3 vii to 3 x in this procedure to complete the creation of the discovery rule.

6 Use a 5620 SAM client to discover the NE and to verify that the NE configuration allows management of the NE, as described in the *5620 SAM User Guide*.

## 5780 DSC management by the 5620 SAM

Perform the following procedures to discover and manage a 5780 DSC with the 5620 SAM.

You must add the IP address of the 5620 SAM to the 5780 DSC firewall rules in order to manage the 5780 DSC. The firewall configuration can be performed:

- as part of the initial 5780 DSC software installation. See the *5780 DSC Planning, Installation, and Upgrade Guide* for the installation prompts associated with configuring the 5780 DSC to work with the 5620 SAM.
- as a post-installation task. See Procedure 4-6.

If you change the 5620 SAM IP address, you need to shut down the existing 5780 DSC firewall settings and reload the new settings to allow the changes to take effect. See Procedure 4-7.

### Procedure 4-6 To configure the 5780 DSC firewall rules for management by the 5620 SAM

Perform this procedure to configure the firewall rules on the 5780 DSC if you need to add a new 5620 SAM, or you are swapping out an existing 5620 SAM that has a different IP address.

**Note 1 —** You can only configure the 5620 SAM to communicate with the 5780 DSC using a IPv4 address.

**Note 2 —** If you deploy the 5780 DSC as an HA cluster, you must perform this procedure on each 5780 DSC CSB component in the HA cluster.

1 Open a console window and log in to the 5780 DSC CSB as the root user.

2 Navigate to the /etc/ipf/ directory.

3 Use a text editor to open the ipf.conf file

**4** Perform one of the following:

**Note —** The firewall rules file must contain entries for each 5620 SAM server in redundant 5620 SAM servers.

**a** If an existing 5620 SAM is currently configured to work with the 5780 DSC, go to step 5.

**b** If a 5620 SAM was not configured to work with the 5780 DSC when the 5780 DSC was first installed, go to step 6.

**5** In the ipf.conf file:

**i** Locate the following comment line.

```
# Give element manager SNMP access to this system.
```

**ii** Change the following strings located directly below the above comment line:

```
pass in quick proto 6 from 5620 SAM IP to 5780 DSC IP port =
161

pass in quick proto 17 from 5620 SAM IP to 5780 DSC IP port =
161
```

where
*5620 SAM IP* is the IP address of the new 5620 SAM server
*5780 DSC IP* is the external floating OAM IP address of the 5780 DSC CSB component

Code 4-1 shows the location of the comment line and strings in the ipf.conf file.

**Code 4-1: Sample code for 5780 DSC firewall rules in the ipf.conf file**

```
# Give element manager SNMP access to this system.
pass in quick proto 6 from 123.456.789.100 to 123.456.789.50 port =
161
pass in quick proto 17 from 123.456.789.100 to 123.456.789.50 port =
161
```

**6** If a 5620 SAM was not configured to work with the 5780 DSC when the 5780 DSC was installed:

**Note —** You can only configure the 5620 SAM to communicate with the 5780 DSC using IPv4.

**i** Locate the following comment line in the ipf.conf file.

```
#===.tpafirewallrules Ends===
```

**ii** Add the appropriate IPv4 comment line and strings as detailed in step 5 directly below the above comment line in the ipf.conf file.

**7** Save and close the ipf.conf file.

8 Perform Procedure 4-7 to remove the old firewall rules and load the new firewall rules.

9 Perform Procedure 4-8 to discover the 5780 DSC.

## Procedure 4-7 To remove the old firewall rules and load the new firewall rules

After the 5780 DSC firewall rules are changed, you must restart the firewall. The TPA_reflushFirewallRules script allows a tpaadmin user to flush the old firewall rules and load the new firewall rules without shutting down the firewall.

1 Open a console window and log in to the 5780 DSC as tpaadmin.

2 Navigate to the /opt/tpa/bin directory.

3 To remove the old firewall rules and load the new firewall rules, type;

```
./TPA_reflushFirewallRules ↵
```

## Procedure 4-8 To configure the 5620 SAM to discover and manage the 5780 DSC

The 5620 SAM uses SNMPv2c to manage the 5780 DSC. The following procedure describes the configuration of a basic SNMPv2c mediation policy and discovery rule that can be used to discover a 5780 DSC. For information about configuring additional parameters in a mediation policy or discovery rule, see the Discovery Management chapter in the *5620 SAM User Guide*.

1 Configure an SNMPv2c mediation security policy on the 5620 SAM.

   i Choose Administration→Mediation from the 5620 SAM main menu. The Mediation (Edit) form opens with the General tab displayed.

   ii Click on the Mediation Security tab button.

   iii Click on the Create button to create an mediation security policy. The Mediation Policy (Create) form opens.

   iv Configure the Displayed Name parameter.

   v Set the Security Model parameter to SNMP v2c.

   vi In the SNMP panel, set the Port parameter to 161.

**vii** Configure the Community String parameter.

**viii** Click on the OK button to save the mediation security policy.

**Note —** The CLI and FTP functions are not supported for the 5780 DSC. Do not change the default values that are in the CLI and FTP panels.

**2** Create a discovery rule for the 5780 DSC on the 5620 SAM:

**i** Choose Administration→Discovery Manager from the 5620 SAM main menu. The Discovery Manager (Edit) form opens with the Discovery Rules tab displayed.

**ii** Click on the Create button. The Create Discovery Rule wizard opens. The wizard divides the configuration procedure into steps.

**iii** In step 1 of the wizard (Specify General Attributes), configure the parameters.

- ID or Auto-Assign ID
- Description
- Administrative State
- OLC State
- Group Name
- Management Protocol

Click on the Next button.

**iv** In step 2 of the wizard (Add Rule Elements), click on the Create button. The Topology Discover Rule Element (Create) form opens.

**v** Enter the 5780 DSC management IP address as the rule element for the discovery rule. The IP address depends on the 5780 DSC deployment model that you use:

- Solaris—IP address of the NIC on the OAM station
- ATCA—floating IP address of the OAM card

**vi** Click on the OK button to save the IP address. A warning dialog box appears.

**vii** Click on the OK button to acknowledge the warning. Click on the Next button.

**viii** In step 3 of the wizard (Configure Mediation Security), click on the Select button and choose the mediation security policy that you created in step 1 for the Read Policy ID, Write Policy ID, and Trap Policy ID parameters.

**ix** Click on the Finish button to save to close the Create Discovery Rule wizard. A warning dialog box appears.

**x** Click on the OK button to acknowledge the warning. The Discovery Manager (Edit) form appears displaying the new discovery rule.

**xi** Click on the OK button to save the discovery rule and close the form.

**xii** Go to step 3.

**3** Use a 5620 SAM client to discover the NE and to verify that the NE configuration allows management of the NE, as described in the *5620 SAM User Guide*.

# *Mobile core configuration and management*

**5 — Configuring and managing LTE ePC equipment**

**6 — Configuring LTE ePC gateways**

**7 — Viewing 9471 MME properties**

**8 — Viewing 5780 DSC properties**

**9 — Configuring LTE ePC mobile regions**

# 5 — Configuring and managing LTE ePC equipment


5.1 LTE ePC equipment configuration and management overview *5-2*

5.2 NE properties form *5-6*

5.3 Shelf properties *5-7*

5.4 Card slots and cards *5-7*

5.5 Daughter cards *5-8*

5.6 Ports *5-8*

5.7 Physical links *5-9*

5.8 ISA-MG groups *5-9*

5.9 Workflow to configure LTE ePC equipment *5-9*

5.10 Configuring LTE ePC equipment procedures *5-9*

# 5.1 LTE ePC equipment configuration and management overview

You can use the 5620 SAM to create, configure, and manage LTE ePC equipment. After an NE is discovered, you can use the properties forms to configure and view specific parameters for the equipment. You can open the properties forms from the contextual menus or from the equipment window display tab.

The 5620 SAM supports the following LTE NEs:

- 7750 MG
- 9471 MME
- 5780 DSC
- managed eNodeB
- unmanaged network elements - eNodeB and serving GPRS support nodes
- unmanaged gateway - PDN gateway

## 7750 MG

The Alcatel-Lucent 7750 MG can be configured as an SGW or a PGW.

### SGW

The SGW routes and forwards user data packets. The SGW is the mobility anchor for the user plane during inter-eNodeB handovers, and is the anchor for mobility between LTE and other 3GPP technologies.

### PGW

The PGW provides connectivity from the UE to external packet data networks. The PGW is the exit and entry point for traffic to and from the UE.

## 9471 MME

The 9471 MME allows the UE to access network services by performing authorization and authentication functions.

### 9471 MME hardware

The 9471 MME cards must be installed in specific slots, as listed in Table 5-1. Slots 9 to 14 are not used. Redundancy is supported for all card types. Multi-shelf 9471 MME configurations are supported.

**Table 5-1 9471 MME card types and functions**

| Card type | Slot | Function |
|---|---|---|
| OAM | 1 and 2 | OAM |

**(1 of 2)**

| Card type | Slot | Function |
|---|---|---|
| MIF, MAF, or combined MIF/MAF | Any available slot (except slots 1, 2, 7, 8, and 15) | Terminate and manage all interface links with the 9471 MME<br>Provide session and bearer management for user sessions and procedures |
| ATCA hub | 7 and 8 | Provide external connectivity to the platform using GE interfaces |
| Shelf management | 15 | Monitor the health of the system and provide feedback to the OAM service |

**(2 of 2)**

### Configuring a 9471 MME

The 5620 SAM provides read-only capability for the 9471 MME. You can configure and manage a 9471 MME using GUIs that can be started from the 5620 SAM. See Procedure 5-5 for information about starting the 9471 MME GUIs.

## 5780 DSC

The 5780 DSC is deployed on the following platforms:

- ATCA
- Solaris

### ATCA v2 platform

The 5780 DSC cabinet can be configured with up to two shelves. Each ATCA shelf has 14 slots. The ATCA cards must be installed in specific slots in the ATCA shelf, as listed in Table 5-2.

**Table 5-2 5780 DSC card types and functions**

| Card type | Slot | Function |
|---|---|---|
| Common Services | 1 and 2 | Provide internal communication between the processing blades and are installed in a 1+1 redundancy side-by-side configuration |
| PCRF Services | 3 to 6 and 9 to 14 | Provide OAM service, DPA service, and PCRF service. The PCRF services blades are installed using a 1+1 redundancy in a side-by-side configuration. |
| ATCA switching hub | 7 and 8 | Provide external connectivity to the platform using GE interfaces |
| Shelf management card | 15 | Monitor the health of the system and provide feedback to the OAM service |

### Solaris platform

The 5780 DSC is supported on Solaris stations that meet the following minimum requirements:

- 64-bit AMD-based station or rack-mount chassis
- dual-core CPU
- 8-Gbyte RAM
- 73-Gbyte hard disk

An HA deployment requires multiple stations of the same type. See the *5780 DSC Planning, Installation, and Upgrade Guide* for more information.

### Monitoring the 5780 DSC

The 5620 SAM provides read-only capability for the 5780 DSC. See chapter 8 for information about how to monitor the 5780 DSC.

### Configuring and managing and PCRF

Configuration and management tasks are performed from the 5780 DSC client GUI. You can open the 5780 DSC client GUI from the 5620 SAM. See Procedure 5-6 for information about starting the 5780 DSC client GUI.

## Unmanaged mobile NEs and gateways

The 5620 SAM uses EPS path information to create unmanaged mobile NEs and gateways to represent LTE network components that it does not manage. You can use the 5620 SAM to list and view the properties of all discovered unmanaged mobile NEs and gateways.

### eNodeB

The 5620 SAM can discover, manage, and configure the eNodeB. Managed eNodeBs exist in the network and topology map as a standard NE. The 5620 SAM can also use S1-U path information retrieved from the SGW to automatically discover eNodeBs as unmanaged mobile NEs. The 5620 SAM can then manage the eNodeB-based mobile services and use the eNodeB as a starting point in the analysis of the different segments that comprise a selected S1-U path. The eNodeB appears on the physical topology map as an unmanaged NE after a physical link has been created from it to another NE.

### PGW

The 5620 SAM uses S5 path information retrieved from the SGW to automatically discover peer PGWs that it does not manage. The unmanaged PGW allows the 5620 SAM to include PGWs as part of a mobile service. The unmanaged PGW appears on the physical topology map after a physical link has been created from it to a managed SGW.

### Serving GPRS support node

The 5620 SAM uses Gn peer information retrieved from the PGW to automatically create unmanaged SGSNs. The unmanaged SGSNs appear on the EPS path topology map.

## 5620 SAM LTE ePC licensing

The 5620 SAM license specifies the number of 7750 MG, 9471 MME, and 5780 DSC cards that can be in the network. When the 5620 SAM attempts to discover a node, the license is checked and if the licensed quantity of cards remaining for the node type is greater then zero, the node can be discovered. If the licensed quantity of cards remaining is less than or equal to zero, the discovery process is blocked. Table 5-3 lists the number of licenses decremented by each card type.

**Table 5-3 5620 SAM LTE license decrement values for NE cards**

| Network element | Licenses decremented |
|---|---|
| **7750 MG** | |
| ISM mobile card | 1 |
| **5780 DSC** | |
| OAM card | 1 |
| PCRF card | 1 |
| **9471 MME** | |
| MIF, MAF, or combined MIF/MAF card | 1 |

Contact your Alcatel-Lucent technical support representative for more information about how to acquire licenses.

## Additional information

Table 5-4 lists where to find more information about using the 5620 SAM to manage LTE ePC equipment. See the appropriate NE user guide for more information.

**Table 5-4 Equipment management resources**

| For more information about | See |
|---|---|
| 5620 SAM equipment management | Equipment Management Overview in the *5620 SAM User Guide* |
| Using the 5620 SAM equipment window | Equipment Management Using the Equipment Window in the *5620 SAM User Guide* |
| 5620 SAM equipment management using the navigation tree | Equipment Management Using the Navigation Tree in the *5620 SAM User Guide* |

## 5.2 NE properties form

The Network Element properties form contains several tabs. The General tab displays information such as the name, management IP address, chassis type, software version, descriptor version, and resource group ID. The Polling, Physical Links, Spans, and Faults tabs are common with other NE objects.

The General tab for an SGW and a PGW displays a Serving and PDN Gateway Instances dashboard area that lists the SGW and PGW instance that is available on the chassis. When you choose an instance, you can view the properties of an SGW or a PGW under the following tabs:

- General
- Components
- Charging
- EPS Peers
- EPS Paths
- Signaling
- Reference Points
- APN
- MG Groups
- Statistics
- Faults

The General tab for the 9471 MME has an MME Service Dashboard area that lists the 9471 MME instances. When you choose an instance, you can view the 9471 MME instance properties in the MME Instance (Edit) form under the following tabs:

- General
- Components
- EPS Peers
- MME Interface Function
- Reference Points
- MME Application Function
- Faults

The General tab for the 5780 DSC has a dashboard area that lists the 5780 DSC instances. When you choose an instance, you can view the 5780 DSC instance properties in the DSC Instance (Edit) form under the following tabs:

- General
- Components
- Diameter Peers
- ISU State
- Faults

## 5.3 Shelf properties

The shelf properties forms for the 7750 MG and the 7750 SR have the following tabs:

- General
- Fan Trays
- Multicast
- Power Supply Trays
- LED Panels
- Card Slots
- Hardware Environment
- Timing
- Statistics
- Faults

The shelf properties forms for the 9471 MME and the 5780 DSC have the following tabs:

- General—includes an equipment dashboard area that lists the equipped card slots in the shelf
- Fan Trays—lists the fan trays in the shelf
- Power Supply—lists the power supplies in the shelf (the Power Supply tab is not available on the 9471 MME shelf properties form).
- Card Slots—lists the card slots in the chassis
- Ports—summarizes all of the physical ports that are available on the hub cards
- Faults—lists the alarms associated with the shelf

The shelf PDU properties form for the 9471 MME has the following tabs:

- General—includes information about the slot PDU, RALARM, and RALARM host
- Faults—lists the alarms associated with the shelf PDU

### 5780 DSC shelves in the equipment navigation view

For the 5780 DSC ATCA deployment, a shelf appears in the 5620 SAM equipment navigation tree as 5780 DSC - ATCA. For a Solaris deployment, a shelf appears in the 5620 SAM equipment navigation tree as 5780 DSC - Non-ATCA.

## 5.4 Card slots and cards

You can use the 5620 SAM to configure card slots and cards for the 7750 MG. The 7750 MG is based on the 7750 SR chassis, and supports several cards and MDAs that are used to provide network connectivity. When you click on the plus sign beside a shelf object, all of the card slots in the shelf are displayed in the navigation tree. The card slots are empty when cards are not provisioned for the slot.

The 7750 MG supports ISM Mobile cards that provide SGW and PGW functionality. The cards fit in the IOM slots on the 7750 MG. You can also configure a second ISM card per ISM Mobile group to provide redundancy inside the group. When the card is managed by the 5620 SAM, the equipment navigation tree displays a preconfigured ISA Mobile daughter card with an associated virtual port. You can right-click on any of the objects and use the contextual menu to view the object properties.

The card slots for the 9471 MME OAM, hub, and shelf management cards are preassigned and cannot be changed. The MIF, MAF, and combined MIF/MAF cards can be placed in any unused card slot. See Table 5-1 for more information about 9471 MME cards. The 9471 MME card properties form includes a Hosts tab that displays the internal IP address assignment of the individual cards, software version, and any associated faults. The internal IP address is assigned by the 9471 MME during the initial configuration.

For the 5780 DSC ATCA-based deployment, the card slots for the Common Services and the PCRF Services cards are preassigned and cannot be changed in the ATCA frame. See Table 5-2 for more information about 5780 DSC card types in the ATCA frame. The 5780 DSC card properties form includes information about the services that are running on the card, the status, and any associated faults.

### 5780 DSC card slots and cards in the equipment navigation view

The 5620 SAM equipment navigation tree displays the 5780 DSC card slots and cards according to the type of platform and deployment.

- For a standalone deployment, the 5620 SAM designates card slot 1 as Workstation. The common services card appears in card slot 1.
- For a multi-station deployment, the 5620 SAM designates provisioned card slots as Workstation. Cards are designated as Workstation (Common Services) or Workstation (PCRF Services).
- For an ATCA-based deployment, the 5620 SAM designates provisioned card slots by ATCA, followed by the type of blade; for example, ATCA Molene Blade. Cards are designated by the ATCA blade type, followed by (Common Services) or (PCRF Services).

## 5.5 Daughter cards

After a card is configured in a 7750 MG card slot, you can use the 5620 SAM to create and configure MDAs.

The 9471 MME and 5780 DSC do not support daughter cards.

## 5.6 Ports

The types of available ports depend on the cards that are configured in a chassis. You can use the 5620 SAM to:

- view and configure physical ports on the 7750 MG
- view the properties of 9471 MME hub card ports
- view the properties of 5780 DSC ports on the common services card

## 5.7 Physical links

The 5620 SAM allows you to create and manage links at the Layer 1 level. The physical links represent the physical configuration of the network connections between the ports. If the device supports LLDP for Ethernet interfaces, the 5620 SAM uses that information to automatically draw the physical links on the network map. Otherwise, you must use the 5620 SAM to create the links.

The 9471 MME and 5780 DSC do not support LLDP. You can view and manage physical links from the equipment window, physical topology map, and the manage equipment list form.

## 5.8 ISA-MG groups

The ISA-MG groups are logical containers that combine multiple ISA-MG cards in a logical group for load balancing in an SGW or a PGW. You must configure the following parameters in the ISA-MG groups configuration form:

- general properties such as Group ID, Description, and SGW or PGW instance ID
- ISA-MG Group members

See Procedure 5-4 for information about configuring ISA-MG groups.

## 5.9 Workflow to configure LTE ePC equipment

1. Set the chassis mode parameter for the 7750 MG to D.
2. Configure the ISM mobile card type.
3. Create an SGW instance.
4. Create a PGW instance.
5. Create an ISA-MG group, and assign an SGW or a PGW instance to it.
6. Start the 9471 MME MI GUI and 9471 MME Provisioning GUI.
7. Start the 5780 DSC GUI.

## 5.10 Configuring LTE ePC equipment procedures

The following procedures describe how to configure LTE ePC equipment.

## Procedure 5-1 To configure the chassis mode for the 7750 MG

Perform this procedure to configure the chassis mode for the 7750 MG.

1. Choose Equipment from the view selector in the navigation tree. The navigation tree displays the Equipment view.
2. Right-click on a shelf object in the equipment view and choose Properties from the contextual menu. The Shelf (Edit) form opens with the General tab displayed.
3. Set the Administrative Mode parameter to D.

**Note —** Chassis mode D is the only chassis mode that is supported.

4. Configure the Force parameter.

   Forcing a chassis mode change does not change the operational chassis mode unless there is a compatible card type equipped on the device.
5. Click on the OK button. The Shelf (Edit) form closes.

## Procedure 5-2 To configure a 7750 MG ISM Mobile card type

1. Choose Equipment from the view selector in the navigation tree. The navigation tree displays the Equipment view.
2. Right-click on an empty 7750 MG Card Slot object and choose Configure Card from the contextual menu. The Card Slot (Create) form opens. The number of slots depends on the number of configured cards and slots on the managed device. Empty slots and configured slots are listed.
3. Set the Assigned Card Type parameter to ISM Mobile.
4. Click on the OK button. The Card Slot (Create) form closes. The card and slot appear in the navigation tree and in the inventory list of the equipment manager. When the ISM Mobile card is configured in card slot 1, the card is represented by a daughter card and a virtual port 1/1/1.

**Note —** Ensure that the correct chassis mode is configured for the assigned card types. The chassis mode determines the behavior of the card and establishes the scaling limits and available features. See Procedure 5-1 for more information.

## Procedure 5-3 To create an SGW or a PGW instance

1 Choose Equipment from the view selector in the navigation tree. The navigation tree displays the Equipment view.

2 Right-click on a 7750 MG NE in the equipment view and choose Properties. The Network Element (edit) form opens with the General tab displayed.

3 Perform one of the following:

   **a** If you need to create an SGW, go to step 4.

   **b** If you need to create a PGW, go to step 12.

4 Click on the Create SGW button. The Serving Gateway (Create) form opens with the General tab displayed.

5 Configure the parameters:

   - EPC ID
   - Dynamic PCC

   The Dymanic PCC parameter applies only to the PGW.

6 Click on the Select button in the Mobile Node Region panel to choose a mobile node region. The Select Mobile Node Region form opens.

7 Configure the filter criteria, if required, and click on the Search button to generate a list of mobile node regions.

8 Choose a region and click on the OK button. The Select Mobile Node Region form closes and the selected profile name appears in the Mobile Node Region panel.

9 Configure the parameters in the Mobile Node ID panel:

   - Group ID
   - Node ID

10 Configure the Administrative State parameter.

11 Go to step 14.

12 Click on the Create PGW button. The PDN Gateway (Create) form opens with the General tab displayed.

13 Perform steps 5 to 10 and then go to step 14.

14 Click on the OK button. The SGW or PGW appears in the list of SGW or PGW instances.

   See the *5620 SAM User Guide* for information about how to configure the NE parameters that are associated with the other tab buttons. See chapter 6 for information about how to configure an SGW or a PGW.

## Procedure 5-4 To create and configure an ISA-MG group

1 Choose Equipment from the view selector in the navigation tree. The equipment navigation tree appears.

2 Locate and expand the device on which you need to create an ISA-MG group.

3 Right-click on the ISA-MG Group icon and choose Create ISA-MG Group. The ISA-MG Group (Create) form opens.

4 Configure the parameters:

- Group ID
- Redundancy Type
- Description

5 Click on the Select button in the Gateway Association panel. The Select Gateway Association - ISA-MG Group form opens.

6 Choose an SGW or a PGW from the list and click on the OK button. The Select Gateway Association - ISA-MG Group form closes and the ISA-MG Group (Create) form opens.

7 Click on the Apply button.

8 Click on the ISA-MG Group Members tab button.

9 Click on the Create button. The ISA-MG Group Member (Create) form opens.

10 Click on the Select button in the Base Card panel. The Select Base Card - ISA-MG Group Member form opens with a list of available ISM Mobile cards.

11 Choose the ISM Mobile card to add to this ISA-MG Group and click the OK button. The Select Base Card - ISA-MG Group Member form closes and the ISA-MG Group Member (Create) form reappears.

12 Click on the OK button. A dialog box appears.

13 Click on the OK button. The selected ISM Mobile card appears in the ISA-MG Group Members list.

14 Click on the OK button. A dialog box appears.

15 Click on the Yes button.

## Procedure 5-5 To start the 9471 MME MI GUI and Provisioning GUI from the 5620 SAM

The 5620 SAM provides read-only capability for the 9471 MME. You must use the 9471 MME GUI or CLI to configure 9471 MME functions. You can use the 5620 SAM to start the 9471 MME MI GUI or the provisioning GUI from the following:

- physical network map
- 9471 MME NE in the equipment navigation tree

- 9471 MME NE properties form

**Note 1 —** A netw.NetworkElement.method_GUICrossLaunch scope of command permission is required to view 9471 MME MI GUI menu items. See the *5620 SAM User Guide* for more information about scope of command roles, profiles, and permissions.

**Note 2 —** For Solaris-based clients, the 9471 MME Provisioning GUI requires Mozilla browser version 3.6.0 or higher.

1 Perform one of the following:

   a Right-click on the 9471 MME icon in the physical network map and choose one of the following:

      - NE Sessions→Launch MI GUI. The Management Interface Authentication form opens. Go to step 2.
      - NE Sessions→Launch Provisioning GUI. The MME Provisioning Web Interface opens in a web browser. Go to step 5.

   b Right-click on the 9471 MME NE in the equipment navigation tree and choose one of the following:

      - NE Sessions→Launch MI GUI. The Management Interface Authentication form opens. Go to step 2.
      - NE Sessions→Launch Provisioning GUI. The MME Provisioning Web Interface opens in a web browser. Go to step 5.

   c Right-click on the 9471 MME NE in the equipment navigation tree and select Properties. The Network Element (Edit) form opens. Click on one of the following buttons:

      - Launch MI GUI. Go to step 2.
      - Launch Provisioning GUI. Go to step 5.

2 Enter the login name and the password for the 9471 MME MI GUI.

3 Click on the Connect button. The 5400 LCP Management Interface opens.

4 Go to step 6.

5 Enter the login name and the password for the 9471 MME Provisioning GUI. Click on the Login button. The LTE Provisioning Web Interface opens.

6 Configure the 9471 MME, as required.

See the 9471 MME *Operations, Administration and Maintenance* and *Configuration Management* guides for information about configuring and using the MI and provisioning GUIs.

## Procedure 5-6 To start the 5780 DSC GUI from the 5620 SAM

The 5620 SAM provides read-only capability for the 5780 DSC. You must use 5780 DSC GUI or CLI to configure 5780 DSC functions. You can, however, use the 5620 SAM to start the 5780 DSC GUI from the following:

- 5780 DSC NE in the equipment navigation tree
- 5780 DSC NE properties form

**Note —** A netw.NetworkElement.method_GUICrossLaunch scope of command permission is required to view 5780 DSC GUI menu items. See the *5620 SAM User Guide* for more information about scope of command roles, profiles, and permissions.

The 5780 DSC discovery and mediation procedures, as described in Procedures 4-6 and 4-8, must be performed before you perform this procedure.

**1** Perform one of the following:

**a** Right-click on the 5780 DSC icon in the physical network map and choose NE Sessions→Launch 5780 DSC Client.

**b** Right-click on the 5780 DSC NE in the equipment navigation tree and choose NE Sessions→Launch 5780 DSC Client.

**c** Open the Network Element (Edit) form by right-clicking on the 5780 DSC NE in the physical network map or in the equipment navigation tree and choose Properties. The Network Element (Edit) form opens. Click on the Launch 5780 DSC Client button.

The 5780 DSC client login page opens in a web browser.

**2** Enter the login name and the password for the 5780 DSC GUI.

**3** Click on the Login button. The 5780 DSC GUI opens.

**4** Configure the 5780 DSC, as required.

See the *5780 DSC User Guide* for information about how to configure and use the 5780 DSC GUI.

## Procedure 5-7 To view unmanaged mobile NE and gateway properties

1. Choose Manage→Mobile Core→Unmanaged Mobile NEs and Gateways from the 5620 SAM main menu. The Browse Unmanaged Mobile NEs and Gateways form opens.
2. Perform one of the following:
   - **a** View unmanaged mobile NE properties.
     - **i** Choose Unmanaged Network Element (LTE) from the Select Object Type drop-down menu
     - **ii** Go to step 3.
   - **b** View unmanaged PDN gateway properties.
     - **i** Choose Unmanaged Gateway (LTE) from the Select Object Type drop-down menu.
     - **ii** Go to step 7.
3. Configure the filter criteria, if required, and click on the Search button.
4. Perform one of the following:
   - **a** View unmanaged eNodeB properties.
     - **i** Choose an unmanaged eNodeB from the list and click on the Properties button.
     - **ii** The Unmanaged Network Element (Edit) form opens. View the properties under the following tabs:
       - General
       - Supporting S1u Peers
       - Mobile Services
       - Faults
   - **b** View unmanaged serving GPRS support node properties.
     - **i** Choose a serving GPRS support node from the list and click on the Properties button.
     - **ii** The Unmanaged Network Element (Edit) form opens. View the properties under the following tabs:
       - General
       - Supporting Gn Peers
       - Faults
5. Close the Unmanaged Network Element (Edit) form.
6. Go to step 11.
7. Configure the filter criteria, if required, and click on the Search button.

**8** Choose an unmanaged PDN gateway from the results list and click on the Properties button.

**9** The Unmanaged Gateway (Edit) form opens. View the properties under the following tabs:

- General
- Supporting S5 Peers
- Mobile Services
- Faults

**10** Close the Unmanaged Gateway (Edit) form.

**11** Close the Browse Unmanaged Mobile NEs and Gateways form.

# 6 — Configuring LTE ePC gateways


**6.1 LTE ePC gateway configuration management overview** *6-2*

**6.2 Workflow to configure an LTE ePC gateway** *6-3*

**6.3 Configuring and viewing an SGW** *6-3*

**6.4 Configuring and viewing a PGW** *6-14*

**6.5 Configuring a 7750 MG for IP packet reassembly** *6-28*

**6.6 Configuring a LAG on a 7750 MG** *6-31*

## 6.1 LTE ePC gateway configuration management overview

A 7750 MG supports a single instance of an SGW or a PGW. The 5620 SAM allows you to configure and view the properties of a gateway instance. A gateway instance is created with default settings that allow each gateway to establish peering sessions with other LTE NEs. You can change the default signaling, reference point, and interface settings of the gateway instance if required.

### Interfaces

Any reference point may be terminated on an IPv4 or IPv6 interface based on a port or on top of a loopback interface. The loopback interface for the node's main routing instance is also known as the node's system interface. An undefined reference point interface defaults to the gateway signaling interface, and an undefined gateway signaling interface defaults to the node's system interface.

### Signaling

Signaling defines the default profiles and signaling interface for a gateway instance.

### Gateway GPRS Support Node

A main component of the GPRS is the GGSN. The GGSN performs the interworking between the GPRS network and external packet-switched networks, such as the Internet and X.25 networks.

The GGSN converts the GPRS packets from the SGSN into the appropriate PDP format (for example, IP or X.25) and sends the packets out on the corresponding PDN. In the other direction, PDP addresses of incoming data packets are converted to the GSM address of the destination user. The readdressed packets are sent to the appropriate SGSN. The GGSN stores the current SGSN address of the user and the associated profile in its location register. The GGSN assigns the IP address and is the default router for the connected UE. The GGSN also performs authentication and charging functions.

### Reference points

Reference points are interfaces that are used by a gateway to communicate with other devices in the LTE network. After a gateway and other NEs are fully synchronized and recognize each other as neighbors, the reference points send out queries looking for other reference points of the same type. When a reference point discovers another reference point, they become peers and the 5620 SAM binds the peers together as an EPS path. You can modify the default settings of a reference point, if required, by changing the L3 interface, protocol profiles, and other parameters that are applied to the reference point.

### Additional information

Table 6-1 lists where to find more information about using the 5620 SAM to manage LTE NEs.

**Table 6-1 Equipment management resources**

| For more information about | See |
|---|---|
| Creating and configuring interfaces | *5620 SAM User Guide* |
| Hardware | The appropriate NE user guide |

## 6.2 Workflow to configure an LTE ePC gateway

This workflow assumes that you have:

- Configured the SGW and PGW, as described in chapter 5.
- Created the following profiles, as described in chapter 14:
  - diameter profile
  - diameter peer profile
  - GTP profile
  - QCI policy

1. Configure SGW signaling.
2. Configure the SGW reference points.
3. Configure SGW APN.
4. Configure PGW signaling.
5. Configure the PGW reference points.
6. Monitor the SGW or PGW, as required.
7. Configure a SGW or PGW for IP packet reassembly, as required.
8. Configure a LAG on a 7750 MGs, as required.

## 6.3 Configuring and viewing an SGW

This section describes how to configure and view signaling and reference points for the SGW.

**Note —** The administrative state of SGW instances must be set to Down before you can perform configuration changes. You must return the administrative state of the SGW instance to Up after you apply the configuration changes.

## Configuring SGW signaling

You must configure the following profiles and interfaces before you can configure signaling:

- Diameter profile, including origin realm and origin host
- GTP profile
- default signaling interface

### Procedure 6-1 To configure SGW signaling

1. Choose Manage→Mobile Core→SGW Instances from the 5620 SAM main menu. The SGW Instances form opens.
2. Choose Serving Gateway (LTE) from the Select Object Type drop-down menu.
3. Configure the filter criteria, if required, and click on the Search button.
4. Choose an SGW instance from the results list and click on the Properties button. The Serving Gateway (Edit) form opens with the General tab displayed.
5. Click on the Signalling tab button.
6. Choose the Diameter profile:
   - **i** Click on the Select button for the Diameter Profile. The Select Diameter Profile form opens.
   - **ii** Configure the filter criteria, if required, and click on the Search button to generate a list of diameter profiles.
   - **iii** Choose a profile and click on the OK button. The Select Diameter Profile form closes and the selected profile is displayed in the Diameter Profile panel.
   - **iv** Configure the parameters:
     - Origin Realm
     - Origin Host
7. Choose a GTP profile for the GTP-C Profile parameter:
   - **i** Click on the Select button for the GTP-C Profile. The Select GTP-C Profile form opens.
   - **ii** Configure the filter criteria, if required, and click on the Search button to generate a list of GTP-C profiles.
   - **iii** Choose a profile and click on the OK button. The Select GTP-C Profile form closes and the selected profile is displayed in the GTP-C Profile panel.

**8** Choose a GTP profile for the GTP-U Profile parameter:

**i** Click on the Select button for the GTP-U Profile. The Select GTP-U Profile form opens.

**ii** Configure the filter criteria, if required, and click on the Search button to generate a list of GTP-U profiles.

**iii** Choose a profile and click on the OK button. The Select GTP-U Profile form closes and the selected profile is displayed in the GTP-U Profile panel.

**9** Choose the signaling interface:

**i** Click on the Select button in the Default Signaling Interface panel. The Select Default Signaling Interface - Serving Gateway Signalling form opens.

**ii** Choose an interface and click on the OK button. The Select Default Signaling Interface - Serving Gateway Signaling form closes, and the Name and ID parameter values for the interface appear in the Serving Gateway (Edit) form.

**10** Click on the OK button to save the configuration. A dialog box opens.

**11** Click on the Yes button to save the configuration and close the window.

## Configuring SGW reference points

The reference points and the associated policies and interfaces for the SGW are as follows:

- Ga
  - L3 interface
  - GTP profile for the GTP-C protocol
  - GTP prime server group profile
- S11
  - L3 interface
  - GTP profile
- S1-U
  - L3 interface
  - GTP profile to configure the GTP-U protocol
- S5
  - L3 interface
  - GTP profile to configure the GTP-C and GTP-U protocols
- Rf
  - L3 interface
  - Diameter peer profile to configure the primary and secondary diameter peer protocols

## Procedure 6-2 To configure SGW reference points

1. Choose Manage→Mobile Core→SGW Instances from the 5620 SAM main menu. The SGW Instances form opens.
2. Choose Serving Gateway (LTE) from the Select Object Type drop-down menu.
3. Configure the filter criteria, if required, and click on the Search button.
4. Choose an SGW instance from the results list and click on the Properties button. The Serving Gateway (Edit) form opens with the General tab displayed.
5. Click on the Reference Points tab button. A list of the SGW reference points is displayed.
6. To configure:
   - a Ga reference point, go to step a
   - an S1-u reference point, go step b
   - an S11 reference point, go to step c
   - an S5 reference point, go to step d
   - an Rf reference point, go to step e

   **a** To configure a Ga reference point:

   **i** Choose the Ga reference point and click on the Properties button. The SGW Reference Point (Edit) form opens with the General tab displayed.

   **ii** Click on the Select button for the L3 interface in the Ga panel. The Select L3 Interface - SGW Reference Point form opens.

   **iii** Configure the filter criteria, if required, and click on the Search button.

   **iv** Choose an L3 or system interface from the results list and click on the OK button. The Select L3 Interface - SGW Reference Point form closes.

   **v** Click on the Select button for the Name in the GTP-C Profile panel. The Select GTP-C Profile - SGW Reference Point form opens.

   **vi** Configure the filter criteria, if required, and click on the Search button.

   **vii** Choose a profile from the results list and click on the OK button. The Select GTP-C Profile - SGW Reference Point form closes.

   **viii** Click on the Select button for the Name in the Prime Group Profile panel. The Select Prime Group Profile - SGW Reference Point form opens.

   **ix** Configure the filter criteria, if required, and click on the Search button.

   **x** Choose a profile from the results list and click on the OK button. The Select Prime Group Profile - PGW Reference Point form closes.

**b** To configure an S1-u reference point:

- **i** Choose the S1-u reference point and click on the Properties button. The S1-u Reference Point (edit) form opens with the General tab displayed.
- **ii** Click on the Select button for the L3 interface in the GTP-U panel. The Select L3 Interface - S1-u Reference Point form opens.
- **iii** Configure the filter criteria, if required, and click on the Search button.
- **iv** Choose an L3 or a system interface from the results list and click on the OK button. The Select L3 Interface - S1-u Reference Point form closes.
- **v** Click on the Select button for the Profile in the GTP-U panel. The Select Profile - S1-u Reference Point form opens.
- **vi** Configure the filter criteria, if required, and click on the Search button.
- **vii** Choose a profile from the results list and click on the OK button. The Select Profile - S1-u Reference Point form closes.

**c** To configure an S11 reference point:

- **i** Choose the S11 reference point and click on the Properties button. The S11 Reference Point (edit) form opens with the General tab displayed.
- **ii** Click on the Select button for the L3 interface in the GTP-C panel. The Select L3 Interface - S11 Reference Point form opens.
- **iii** Configure the filter criteria, if required, and click on the Search button.
- **iv** Choose an L3 or a system interface from the results list and click on the OK button. The Select L3 Interface - S11 Reference Point form closes.
- **v** Click on the Select button for the Profile in the GTP-C panel. The Select Profile - S11 Reference Point form opens.
- **vi** Configure the filter criteria, if required, and click on the Search button.
- **vii** Choose a profile from the results list and click on the OK button. The Select Profile - S11 Reference Point form closes.

**d** To configure an S5 reference point:

- **i** Choose the S5 reference point and click on the Properties button. The SGW S5 Reference Point (edit) form opens with the General tab displayed.
- **ii** Click on the Select button for the L3 interface in the GTP-C panel. The Select L3 Interface - SGW S5 Reference Point form opens.
- **iii** Configure the filter criteria, if required, and click on the Search button.
- **iv** Choose an L3 or a system interface from the results list and click on the OK button. The Select L3 Interface - SGW S5 Reference Point form closes.
- **v** Click on the Select button for the Profile in the GTP-C panel. The Select Profile - SGW S5 Reference Point form opens.

**vi** Configure the filter criteria, if required, and click on the Search button.

**vii** Choose a profile from the results list and click on the OK button. The Select Profile - SGW S5 Reference Point form closes.

**viii** Click on the Select button for the L3 interface in the GTP-U panel. The Select L3 Interface - SGW S5 Reference Point form opens.

**ix** Configure the filter criteria, if required, and click on the Search button.

**x** Choose an L3 or a system interface from the results list and click on the OK button. The Select L3 Interface - SGW S5 Reference Point form closes.

**xi** Click on the Select button for the Profile in the GTP-U panel. The Select Profile - SGW S5 Reference Point form opens.

**xii** Configure the filter criteria, if required, and click on the Search button.

**xiii** Choose a profile from the results list and click on the OK button. The Select Profile - SGW S5 Reference Point form closes.

**e** To configure an Rf reference point:

**i** Choose the Rf reference point and click on the Properties button. The SGW Rf (edit) form opens with the General tab displayed.

**ii** Configure the following parameters:

- Accounting Interim Interval(s)
- Accounting Level
- Inclusion of Charging-Group-ID AVP in ACR
- Operator-string AVP of an ACR Message
- Retry Count for ACR Messages (s)
- Application Transaction Timer(s)
- Node ID

**iii** Click on the Select button in the L3 interface panel. The Select L3 Interface - SGW Rf form opens.

**iv** Configure the filter criteria, if required, and click on the Search button.

**v** Choose an L3 or a system interface from the results list and click on the OK button. The Select L3 Interface - SGW Rf form closes.

**vi** Click on the Select button for the Primary Diameter Peer Profile in the Diameter Peer Profiles panel. The Select Primary Diameter Peer Profile - SGW Rf form opens.

**vii** Configure the filter criteria, if required, and click on the Search button.

**viii** Choose a Diameter peer profile from the results list and click on the OK button. The Select Primary Diameter Peer Profile - SGW Rf form closes.

**ix** Click on the Select button for the Secondary Diameter Peer Profile in the Diameter Peer Profiles panel. The Select Secondary Diameter Peer Profile - SGW Rf form opens.

**x** Configure the filter criteria, if required, and click on the Search button.

**xi** Choose a Diameter peer profile from the results list and click on the OK button. The Select Secondary Diameter Peer Profile - SGW Rf form closes.

**xii** Click on the Outage tab button.

**xiii** Configure the following Rf outage parameters:

- Limit for the number of ACRs
- Size Limit Before File Closure (Mbps)
- Duration before File Closure (hours)
- File Extension
- Duration before File Deletion (days)
- Private Info
- Primary Compact Flash

**xiv** Configure the Configuration File Limit (Mbps) parameter in the ACR Storage on cf1 panel.

**xv** Configure the Configuration File Limit (Mbps) parameter in the ACR Storage on cf2 panel.

**7** Click on the OK button to save the configuration. A dialog box opens.

**8** Click on the Yes button to save the configuration and close the window.

## Procedure 6-3 To add an APN to an SGW

**1** Choose Manage→Mobile Core→SGW Instances from the 5620 SAM main menu. The SGW Instances form opens.

**2** Choose Serving Gateway (LTE) from the Select Object Type drop-down menu.

**3** Configure the filter criteria, if required, and click on the Search button.

**4** Choose an SGW instance from the results list and click on the Properties button. The Serving Gateway (Edit) form opens with the General tab displayed.

**5** Click on the APN tab button. A list of APNs is displayed.

**6** Click on the Create button. The Serving Gateway APN (Create) form opens.

**7** Configure the following parameters:

- Name
- Description

8 Configure the QCI policies:

   i Configure the Name parameter in the Uplink QCI Policy panel. Click on the Select button. The Select Uplink QCI Policy - Serving Gateway APN form opens.

   ii Configure the filter criteria, if required, and click on the Search button.

   iii Choose a policy from the results list and click on the OK button. The Select Uplink QCI Policy - Serving Gateway APN form closes and the policy that you chose is displayed in the Name field.

   iv Configure the Name parameter in the Downlink QCI Policy panel. Click on the Select button. The Select Downlink QCI Policy - Serving Gateway APN form opens.

   v Configure the filter criteria, if required, and click on the Search button.

   vi Choose a policy from the results list and click on the OK button. The Select Downlink QCI Policy - Serving Gateway APN form closes and the selected policy is displayed in the Name field.

9 Click on the OK button to save the configuration.

## Adding charging profiles to an SGW

You must configure an SGW charging profile before you can add the profile to an SGW. See Procedure 14-14 for information about creating SGW charging profiles.

### Procedure 6-4 To add charging profiles to an SGW

1 Choose Manage→Mobile Core→SGW Instances from the 5620 SAM main menu. The SGW Instances form opens.

2 Choose Serving Gateway (LTE) from the object type drop-down list.

3 Configure the filter criteria, if required, and click on the Search button. The SGW instances are listed on the form.

4 Select an SGW instance in the list and click on the Properties button. The Serving Gateway (Edit) form opens with the General tab displayed.

5 Click on the Charging tab button.

6 Configure the parameters in the Settings from MME and HSS for Subscribers panel:

- Ignore All
- Ignore Home
- Ignore Visiting
- Ignore Roaming
- Reject Charging

7 Perform the following steps to configure the charging profiles.

   i Click on the Select button in the Home Profile panel. The Select Home Profile–Serving Gateway form opens.

   ii Select a profile in the list and click on the OK button. The Select Home Profile – Serving Gateway form closes and the profile ID is displayed in the Home Profile panel.

   iii Click on the Select button in the Visiting Profile panel. The Select Visiting Profile – Serving Gateway form opens.

   iv Select a profile in the list and click on the OK button. The Select Visiting Profile – Serving Gateway form closes and the profile ID is displayed in the Visiting Profile panel.

   v Click on the Select button in the Roaming Profile panel. The Select Roaming Profile – Serving Gateway form opens.

   vi Select a profile in the list and click on the OK button. The Select Roaming Profile – Serving Gateway form closes and the profile ID is displayed in the Roaming Profile panel.

8 Click on the OK button. A dialog box appears.

9 Click on the Yes button. The Serving Gateway (Edit) form closes.

10 Close the SGW Instances form.

## Viewing and changing SGW properties

The 5620 SAM supports the following properties forms that you can use to monitor the status of the SGW and to change properties as required:

- SGW instance properties
- SGW application properties
- SGW interface properties
- SGW interface member properties

### Procedure 6-5 To view and change SGW instance properties

1 Choose Manage→Mobile Core→SGW Instances from the 5620 SAM main menu. The SGW Instances form opens.

2 Choose Serving Gateway (LTE) from the Select Object Type drop-down menu.

3 Configure the filter criteria, if required, and click on the Search button.

4 Choose an SGW instance from the results list and click on the Properties button. The Serving Gateway (Edit) form opens with the General tab displayed.

**5** Change the default settings for the QCI policies, if required. Configure the following in the QCI Policies panel:

**i** Configure the Name parameter in the Uplink QoS Class Id (QCI) panel. Click on the Select button. The Select Uplink QCI Policy - Serving Gateway APN form opens.

**ii** Configure the filter criteria, if required, and click on the Search button.

**iii** Choose a policy from the results list and click on the OK button. The Select Uplink QCI Policy - Serving Gateway APN form closes and the policy that you chose is displayed in the Name field.

**iv** Configure the Name parameter in the Downlink QoS Class Id (QCI) panel. Click on the Select button. The Select Downlink QCI Policy - Serving Gateway APN form opens.

**v** Configure the filter criteria, if required, and click on the Search button.

**vi** Choose a policy from the results list and click on the OK button. The Select Downlink QCI Policy - Serving Gateway APN form closes and the policy that you chose is displayed in the Name field.

**6** Change the following parameters that you configured in Procedure 5-3, if required:

- Mobile Node Region
- Group
- Node ID
- Administrative State

**7** View the properties of the SGW instance under the following tabs:

- Components—provides a hierarchical view of the SGW application and the interface functions of the SGW
- Charging
- EPS Peers—lists the types of EPS peers, such as S11 and S5. You can choose an EPS peer and display the properties associated with the peer.
- EPS Paths—lists the types of EPS peers for which there is path information. You can choose an EPS path and display the properties associated with the path.
- Signalling
- Reference Points
- APN
- MG Groups
- Statistics
- Faults

**8** Close the Serving Gateway (Edit) form.

**9** Close the SGW Instances form.

## Procedure 6-6 To view SGW application properties

1 Choose Manage→Mobile Core→SGW Instances from the 5620 SAM main menu. The SGW Instances form opens.

2 Choose SGW Application (LTE) from the Select Object Type drop-down menu.

3 Configure the filter criteria, if required, and click on the Search button.

4 Choose an SGW application from the results list and click on the Properties button. The SGW Application (Edit) form opens with the General tab displayed.

5 View the properties of the SGW Application under the following tabs:

- General
- Components
- Faults

6 Close the SGW Application (Edit) form.

7 Close the SGW Instances form.

## Procedure 6-7 To view SGW interface properties

1 Choose Manage→Mobile Core→SGW Instances from the 5620 SAM main menu. The SGW Instances form opens.

2 Choose SGW Interface (LTE) from the Select Object Type drop-down menu.

3 Configure the filter criteria, if required, and click on the Search button.

4 Choose an SGW interface from the results list and click on the Properties button. The SGW Interface (Edit) form opens on the General tab.

5 View the properties of the SGW Application under the following tabs:

- General
- Components
- SGW Interface Members
- Faults

6 Close the SGW Interface (Edit) form.

7 Close the SGW Instances form.

### Procedure 6-8 To view SGW interface member properties

1 Choose Manage→Mobile Core→SGW Instances from the 5620 SAM main menu. The SGW Instances form opens.

2 Choose SGW Interface Member (LTE) from the Select Object Type drop-down menu.

3 Configure the filter criteria, if required, and click on the Search button.

4 Choose an SGW interface from the results list and click on the Properties button. The SGW Interface Member (Edit) form opens with the General tab displayed.

5 View the properties of the SGW interface members under the following tabs:

- General
- Components
- Faults

6 Close the SGW Interface Member (Edit) form.

7 Close the SGW Instances form.

## 6.4 Configuring and viewing a PGW

This section describes how to configure signaling and reference points for the PGW.

**Note —** The administrative state of PGW instances must be set to Down before you can perform configuration changes. You must return the administrative state of the PGW instance to Up after you apply the configuration changes.

### Configuring PGW signaling

You must configure the following profiles and interfaces before you can configure signaling:

- Diameter profile, including origin realm and origin host
- GTP profile
- GTP prime server group profile
- default signaling interface

### Procedure 6-9 To configure PGW signaling

1 Choose Manage→Mobile Core→PGW/GGSN Instances from the 5620 SAM main menu. The PGW/GGSN Instances form opens.

2 Choose PDN Gateway (LTE) from the Select Object Type drop-down menu.

3 Configure the filter criteria, if required, and click on the Search button.

4 Choose a PGW instance from the results list and click on the Properties button. The PDN Gateway (Edit) form opens with the General tab displayed.

5 Click on the Signalling tab button.

6 Choose a Diameter Profile:

   i Click on the Select button for the Diameter Profile. The Select Diameter Profile - Serving Gateway Signalling form opens.

   ii Configure the filter criteria, if required, and click on the Search button to generate a list of Diameter profiles.

   iii Choose a profile and click on the OK button. The Select Diameter Profile - Serving Gateway Signalling form closes and the selected profile is displayed in the Diameter Profile panel.

   iv Configure the parameters:

   - Origin Realm
   - Origin Host

7 Choose a GTP profile for the GTP-C protocol:

   i Click on the Select button for the GTP-C Profile. The Select GTP-C Profile - Serving Gateway Signalling form opens.

   ii Configure the filter criteria, if required, and click on the Search button to generate a list of GTP-C profiles.

   iii Choose a profile and click on the OK button. The Select GTP-C Profile - Serving Gateway Signalling form closes and the selected profile is displayed in the GTP-C Profile panel.

8 Choose a GTP profile for the GTP-U protocol:

   i Click on the Select button for the GTP-U Profile. The Select GTP-U Profile - Serving Gateway Signalling form opens.

   ii Configure the filter criteria, if required, and click on the Search button to generate a list of GTP-U profiles.

   iii Choose a profile and click on the OK button. The Select GTP-U Profile - Serving Gateway Signalling form closes and the selected profile is displayed in the GTP-U Profile panel.

9 Choose a default signalling interface:

   i Click on the Select button in the Default Signalling Interface panel. The Select Default Signalling Interface - Serving Gateway Signalling form opens.

   ii Choose an interface and click on the OK button. The Select Default Signalling Interface - Serving Gateway Signalling form closes, and the Name and ID parameter values for the interface appear in the form.

10 Click on the OK button to save the configuration. A dialog box opens.

11 Click on the Yes button to save the configuration and close the window.

## Configuring PGW reference points

The reference points and the associated policies and interfaces for the PGW are as follows:

- Ga
  - L3 interface
  - GTP profile for the GTP-C protocol
  - GTP prime server group profile
- Gn
  - L3 interface and GTP profile for the GTP-C protocol
  - L3 interface and GTP profile for the GTP-U protocol
- S5
  - L3 interface
  - GTP profile to configure the GTP-C and GTP-U protocols
- Gx
  - L3 interface
  - Diameter profile to configure the diameter peer protocol
  - PCRF selection, which requires the Diameter Peer profile to configure the primary and secondary diameter peers

### Procedure 6-10 To configure PGW reference points

1 Choose Manage→Mobile Core→PGW/GGSN Instances from the 5620 SAM main menu. The PGW/GGSN Instances form opens.

2 Choose PDN Gateway (LTE) from the Select Object Type drop-down menu.

3 Configure the filter criteria, if required, and click on the Search button.

4 Choose a PGW instance from the results list and click on the Properties button. The PDN Gateway (Edit) form opens with the General tab displayed.

5 Click on the Reference Points tab button. A list of the PGW reference points is displayed.

**6** To configure:

- a Ga reference point, go to step a
- a Gn reference point, go to step b
- an S5 reference point, go to step c
- a Gx reference point, go to step d

**a** To configure a Ga reference point:

**i** Choose the Ga reference point and click on the Properties button. The PGW Reference Point (Edit) form opens with the General tab displayed.

**ii** Click on the Select button for the L3 interface in the Ga panel. The Select L3 Interface - PGW Reference Point form opens.

**iii** Configure the filter criteria, if required, and click on the Search button.

**iv** Choose an L3 or system interface from the results list and click on the OK button. The Select L3 Interface - PGW Reference Point form closes.

**v** Click on the Select button for the Name in the GTP-C Profile panel. The Select GTP-C Profile - PGW Reference Point form opens.

**vi** Configure the filter criteria, if required, and click on the Search button.

**vii** Choose a profile from the results list and click on the OK button. The Select GTP-C Profile - PGW Reference Point form closes.

**viii** Click on the Select button for the Name in the Prime Group Profile panel. The Select Prime Group Profile - PGW Reference Point form opens.

**ix** Configure the filter criteria, if required, and click on the Search button.

**x** Choose a profile from the results list and click on the OK button. The Select Prime Group Profile - PGW Reference Point form closes.

**b** To configure a Gn reference point:

**i** Choose the Gn reference point and click on the Properties button. The Gn Reference Point (Edit) form opens with the General tab displayed.

**ii** Click on the Select button for the L3 interface in the GTP-C panel. The Select L3 Interface - Gn Reference Point form opens.

**iii** Configure the filter criteria, if required, and click on the Search button.

**iv** Choose an L3 or system interface from the results list and click on the OK button. The Select L3 Interface - Gn Reference Point form closes.

**v** Click on the Select button for the profile Name in the GTP-C panel. The Select Profile - Gn Reference Point form opens.

**vi** Configure the filter criteria, if required, and click on the Search button.

**vii** Choose a profile from the results list and click on the OK button. The Select Profile - Gn Reference Point form closes.

**viii** Click on the Select button for the L3 interface in the GTP-U panel. The Select L3 Interface - Gn Reference Point form opens.

**ix** Configure the filter criteria, if required, and click on the Search button.

**x** Choose an L3 or system interface from the results list and click on the OK button. The Select L3 Interface - Gn Reference Point form closes.

**xi** Click on the Select button for the profile Name in the GTP-U panel. The Select Profile - Gn Reference Point form opens.

**xii** Choose a profile from the results list and click on the OK button. The Select Profile - Gn Reference Point form closes.

**xiii** Configure the filter criteria, if required, and click on the Search button.

**c** To configure an S5 reference point:

**i** Choose the S5 reference point and click on the Properties button. The PDN S5 Reference Point (Edit) form opens with the General tab displayed.

**ii** Click on the Select button for the L3 interface in the GTP-C panel. The Select L3 Interface - PDN S5 Reference Point form opens.

**iii** Configure the filter criteria, if required, and click on the Search button.

**iv** Choose an L3 or system interface from the results list and click on the OK button. The Select L3 Interface - PDN S5 Reference Point form closes.

**v** Click on the Select button for the profile Name in the GTP-C panel. The Select Profile - PDN S5 Reference Point form opens.

**vi** Configure the filter criteria, if required, and click on the Search button.

**vii** Choose a profile from the results list and click on the OK button. The Select Profile - PDN S5 Reference Point form closes.

**viii** Click on the Select button for the L3 interface in the GTP-U panel. The Select L3 Interface - PDN S5 Reference Point form opens.

**ix** Configure the filter criteria, if required, and click on the Search button.

**x** Choose an L3 or system interface from the results list and click on the OK button. The Select L3 Interface - PDN S5 Reference Point form closes.

**xi** Click on the Select button for the Profile in the GTP-U panel. The Select Profile - PDN S5 Reference Point form opens.

**xii** Configure the filter criteria, if required, and click on the Search button.

**xiii** Choose a profile from the results list and click on the OK button. The Select Profile - PDN S5 Reference Point form closes.

**d** To configure a Gx reference point:

**i** Choose the Gx reference point and click on the Properties button. The PDN Gx Reference Point (Edit) form opens with the General tab displayed.

**ii** Click on the Select button for the L3 interface in the Diameter panel. The Select L3 Interface - PDN Gx Reference Point form opens.

**iii** Configure the filter criteria, if required, and click on the Search button.

**iv** Choose an L3 or system interface from the results list and click on the OK button. The Select L3 Interface - PDN Gx Reference Point form closes.

**v** Configure the parameters:

- Transaction Timer
- Retry Count

**vi** Click on the Select button for the Primary Diameter Peer Profile in the PCRF Selection panel. The Select Primary Diameter Peer Profile - PDN Gx Reference Point form opens.

**vii** Configure the filter criteria, if required, and click on the Search button.

**viii** Choose a profile from the results list and click on the OK button. The Select Primary Diameter Peer Profile - PDN Gx Reference Point form closes.

**ix** Click on the Select button for the Secondary Diameter Peer Profile in the PCRF Selection panel. The Select Secondary Diameter Peer Profile - PDN Gx Reference Point form opens.

**x** Configure the filter criteria, if required, and click on the Search button.

**xi** Choose a profile from the results list and click on the OK button. The Select Secondary Diameter Peer Profile - PDN Gx Reference Point form closes.

**7** Click on the OK button to save the configuration. A dialog box opens.

**8** Click on the Yes button to save the configuration and close the window.

## Configuring a PGW APN

You must configure the following profiles and policies before you can add an APN to a PGW:

- Diameter peer profiles; see Procedure 14-7 for configuration information
- QCI policies; see Procedure 14-9 for configuration information
- PGW charging profiles; see Procedure 14-12 for configuration information

You must also configure IP address pools to add to the APN. See Procedure 14-12 for configuration information.

### Procedure 6-11 To add an APN to a PGW

1 Choose Manage→Mobile Core→PGW/GGSN Instances from the 5620 SAM main menu. The PGW Instances form opens.

2 Choose PDN Gateway (LTE) from the object type drop-down list.

3 Configure the filter criteria, if required, and click on the Search button.

4 Select a PGW instance in the list and click on the Properties button. The PDN Gateway (Edit) form opens with the General tab displayed.

5 Click on the PDN APN tab button.

6 Click on the Create button. The PDN APN (Create) form opens.

7 Configure the parameters:

- Name
- Description
- Type

8 Click on the select button in the Virtual Router panel. The Select Virtual Router - PDN APN form opens.

9 Select a virtual router in the list and click on the OK button. The Select Virtual Router - PDN APN form closes and the selected virtual router name is displayed in the Virtual Router panel.

10 Configure the parameters:

- Restriction Type
- Multiple PDNs allowed
- Subscribed APN Selection Mode
- Mobile Station APN Selection Mode
- Network APN Selection Mode
- PCRF Selection Dynamic PCC
- Aggregated Uplink Rate (kbps)
- Aggregated Downlink Rate (kbps)
- Administrative State
- IPv4
- IPv6
- IP v4/v6
- Local Pool
- Home Subscriber Server Assigned

11 Click on the QCI/Diameter tab button.

12 Click on the Select button in the Uplink QCI Profile panel. The Select Uplink QCI Profile - PDN APN form opens.

**13** Configure the filter criteria, if required, and click on the Search button. A list of QCI profiles is displayed.

**14** Select a profile in the list and click on the OK button. The Select Uplink QCI Profile - PDN APN form closes and the profile name is displayed in the Uplink QCI Profile panel.

**15** Click on the Select button in the Downlink QCI Profile panel. The Select Downlink QCI Profile - PDN APN form opens.

**16** Configure the filter criteria, if required, and click on the Search button. A list of QCI profiles is displayed.

**17** Select a profile in the list and click on the OK button. The Select Downlink QCI Profile - PDN APN form closes and the profile name is displayed in the Downlink QCI Profile panel.

**18** Click on the Select button in the CDF Primary Diameter Peer Profile panel. The Select CDF Primary Diameter Peer Profile - PDN APN form opens.

**19** Configure the filter criteria, if required, and click on the Search button. A list of diameter peer profiles is displayed.

**20** Select a profile in the list and click on the OK button. The Select CDF Primary Diameter Peer Profile - PDN APN form closes and the profile name is displayed in the CDF Primary Diameter Peer Profile panel.

**21** Click on the Select button in the CDF Secondary Diameter Peer Profile panel. The Select CDF Secondary Diameter Peer Profile - PDN APN form opens.

**22** Configure the filter criteria, if required, and click on the Search button. A list of diameter peer profiles is displayed.

**23** Select a profile in the list and click on the OK button. The Select CDF Secondary Diameter Peer Profile - PDN APN form closes and the profile name is displayed in the CDF Secondary Diameter Peer Profile panel.

**24** Click on the Connectivity tab button.

**25** Configure the parameters in the PCO Domain Name System (DNS) panel.

- IPV4 Primary Address
- IPV4 Secondary Address
- IPV6 Primary Address
- IPV6 Secondary Address

**26** Configure the parameters in the PCO Proxy Call Session Control Function (PCSCF) panel.

- IPV4 Primary Address
- IPV6 Primary Address

**27** Configure the parameters in the PCO NetBIOS Name Service (NBNS) panel.

- IPV4 Primary Address
- IPV4 Secondary Address

**28** Click on the Charging tab button.

**29** In the Settings from MME and HSS for Subscribers panel, configure the parameters:

- Ignore All
- Ignore Home
- Ignore Visiting
- Ignore Roaming
- Reject Charging

**30** Configure the Inherit Home Profile From Gateway parameter.

**Note —** When the Inherit Home Profile From Gateway parameter is selected you cannot manually select a charging profile in the following steps. To manually select a profile, you must first deselect the Inherit Home Profile From Gateway parameter.

**31** If you want to manually select a profile, click on the Select button in the Home Profile when not inherited panel. The Select Home Profile when not inherited - PDN APN form opens.

**32** Configure the filter criteria, if required, and click on the Search button. A list of charging profiles is displayed.

**33** Select a profile in the list and click on the OK button. The Select Home Profile when not inherited - PDN APN form closes.

**34** Configure the Inherit Visiting Profile From Gateway parameter.

**35** If you want to manually select a profile, click on the Select button in the Visiting Profile when not inherited panel. The Select Visiting Profile when not inherited - PDN APN form opens.

**36** Configure the filter criteria, if required, and click on the Search button. A list of charging profiles is displayed.

**37** Select a profile and click on the OK button. The Select Visiting Profile when not inherited - PDN APN form closes.

**38** Configure the Inherit Roaming Profile From Gateway parameter.

**39** If you want to manually select a profile, click on the Select button in the Roaming Profile when not inherited panel. The Select Roaming Profile when not inherited - PDN APN form opens

**40** Configure the filter criteria, if required, and click on the Search button. A list of charging profiles is displayed.

**41** Select a profile in the list and click on the OK button. The Select Roaming Profile when not inherited - PDN APN form closes.

**42** Click on the IP Address Pool Binding tab button.

**43** Click on the Create button. The IP Address Pool Binding (Create) form opens.

**44** Click on the Select button. The Select IP Address Pool – IP Address Pool Binding form opens.

**45** Configure the filter criteria, if required, and click on the Search button. A list of IP address pools is displayed.

**46** Select an IP address pool and click on the OK button. The Select IP Address Pool - IP Address Pool Binding form closes and the IP Address Pool Binding (Create) form displays the IP address pool name.

**47** Click on the Apply button. A dialog box appears.

**48** Click on the OK button. The IP address pool is listed on the PDN APN (Create) form.

**49** To add another IP address pool, perform the following steps.

**i** Click on the Clear button.

**ii** Repeat steps 44 to 48.

**50** Close the IP Address Pool Binding (Create) form.

**51** Click on the OK button. The PDN APN form closes.

**52** Close the PDN Gateway (Edit) form.

## IP address pools

The IP address pools are defined on PGW and SGW base routing instances and VPRN site instances. Each routing instance can have multiple IP address pools, and each IP address pool can have multiple IP pool entries. The IP pools are applied to the PGW APNs.

### Procedure 6-12 To configure IP address pools

**1** Perform one of the following.

**a** To add an IP address pool to a PGW or SGW routing instance, go to step 2.

**b** To add an IP address pool to a PGW or SGW VPRN site instance, go to step 6.

**2** Choose Routing from the view selector in the navigation tree.

**3** Navigate to a routing instance by choosing Network→ Router→ Routing Instance.

**4** Right-click on the routing instance icon and choose Properties from the contextual menu. The Routing Instance (Edit) form opens with the General tab displayed.

**5** Go to step 11.

**6** Choose Manage→Service→Services from the 5620 SAM main menu. The Manage Services form opens.

**7** Configure the filter criteria. A list of services is displayed.

**8** Choose a VPRN service and click on the Properties button. The VPRN Service (Edit) form opens with the General tab displayed.

9 Click on the Sites tab button.

10 Choose a PGW or SGW VPRN site and click on the Properties button. The VPRN Service (Edit) form opens with the General tab displayed.

11 Click on the IP Address Pool tab button.

12 Click on the Create button. The IP Address Pool (Create) form opens with the General tab displayed.

13 Configure the parameters:

- Auto-Assign ID
- IP Pool ID
- IP Pool Name
- Is Exclusive
- IP Pool Address Hold Timer (minutes)

14 Click on the IP Address Pool Entry tab button.

15 Click on the Create button. The IP Address Pool Entry (Create) form opens with the General tab displayed.

16 Configure the parameters:

- Pool Address Type
- Pool Ip Address
- Prefix Length
- Pool Address Block

17 Click on the Apply button. A dialog box appears.

18 Click on the OK button.

19 Repeat steps 16 to 18 to create an additional IP address pool entry.

20 Close the IP Address Pool Entry (Create) form. The IP Address Pool (Create) form reappears.

21 Click on the OK button. A dialog box appears.

22 Click on the OK button. The IP Address Pool (Create) form closes.

23 Repeat steps 12 to 22 to create an additional IP address pool.

24 Close the VPRN (Create) or Routing Instance (Edit) form, as required.

## Adding charging profiles to a PGW

You must configure PGW charging profiles before you can apply the profiles to a PGW. See Procedure 14-12 for information about configuring PGW charging profiles.

## Procedure 6-13 To add charging profiles to a PGW

1 Choose Manage→Mobile Core→PGW/GGSN Instances from the 5620 SAM main menu. The PGW Instances form opens.

2 Choose PDN Gateway (LTE) from the object type drop-down list.

3 Configure the filter criteria, if required, and click on the Search button.

4 Choose a PGW instance in the list and click on the Properties button. The PDN Gateway (Edit) form opens with the General tab displayed.

5 Click on the Charging tab button.

6 Configure the parameters:

- Ignore All
- Ignore Home
- Ignore Visiting
- Ignore Roaming
- Reject Charging

7 Perform the following steps to configure the charging profiles.

**i** Click on the Select button in the Home Profile panel. The Select Home Profile – PDN Gateway form opens.

**ii** Select a profile in the list and click on the OK button. The Select Home Profile – PDN Gateway form closes and the profile ID is displayed in the Home Profile panel.

**iii** Click on the Select button in the Visiting Profile panel. The Select Visiting Profile – PDN Gateway form opens.

**iv** Select a profile in the list and click on the OK button. The Select Visiting Profile – PDN Gateway form closes and the profile ID is displayed in the Visiting Profile panel.

**v** Click on the Select button in the Roaming Profile panel. The Select Roaming Profile – PDN Gateway form opens.

**vi** Select a profile in the list and click on the OK button. The Select Roaming Profile – PDN Gateway form closes and the profile ID is displayed in the Roaming Profile panel.

8 Configure the Node ID parameter.

9 Click on the OK button. A dialog box appears.

10 Click on the Yes button. The PDN Gateway (Edit) form closes.

11 Close the PGW Instances form.

## Viewing and changing PGW properties

The 5620 SAM supports the following properties forms that you can use to monitor the status of the PGW and to change properties as required:

- PGW instance properties
- PGW application properties
- PGW interface properties
- PGW interface member properties

### Procedure 6-14 To view and change PGW instance properties

1 Choose Manage→Mobile Core→PGW/GGSN Instances from the 5620 SAM main menu. The Manage PDN Gateways (PGW) form opens.

2 Choose PDN Gateway (LTE) from the Select Object Type drop-down menu.

3 Configure the filter criteria, if required, and click on the Search button.

4 Choose a PGW instance from the results list and click on the Properties button. The PDN Gateway (Edit) form opens on the General tab.

5 Change the Dynamic PCC parameter, if required.

6 Change the default settings for the QCI policies, if required. Configure the following in the QCI Policies panel:

   **i** Configure the Name parameter in the Uplink QoS Class Id (QCI) panel. Click on the Select button. The Select Uplink QCI Policy - Serving Gateway APN form opens.

   **ii** Configure the filter criteria, if required, and click on the Search button.

   **iii** Choose a policy from the results list and click on the OK button. The Select Uplink QCI Policy - Serving Gateway APN form closes and the selected policy is displayed in the Name field.

   **iv** Configure the Name parameter in the Downlink QoS Class Id (QCI) panel. Click on the Select button. The Select Downlink QCI Policy - Serving Gateway APN form opens.

   **v** Configure the filter criteria, if required, and click on the Search button.

   **vi** Choose a policy from the results list and click on the OK button. The Select Downlink QCI Policy - Serving Gateway APN form closes and the policy that you chose is displayed in the Name field.

7 Change the following parameters that you configured in Procedure 5-3, if required:

   - Mobile Node Region
   - Group IDGroup ID
   - Node ID
   - Administrative State

8 View the properties of the PGW instance under the following tabs:

- Components—provides a hierarchical view of the PGW application and interface functions of the PGW
- Charging
- EPS peers—lists the types of EPS peers such as S5 and Gx. You can choose an EPS peer and display the peer properties. See Procedure 11-1 for more information about EPS peer parameters.
- EPS paths—lists the types of EPS peers for which there is path information. You can choose an EPS path and display the path properties. See Procedure 11-2 for more information about EPS path parameters.
- Signaling
- Reference Points
- PDN APN
- MG Groups
- Faults

9 Close the PDN Gateway (Edit) form.

10 Close the Manage PDN Gateways (PGW) form.

## Procedure 6-15 To view PGW application properties

1 Choose Manage→Mobile Core→PGW/GGSN Instances from the 5620 SAM main menu. The Manage PDN Gateways (PGW) form opens.

2 Choose PGW Application (LTE) from the Select Object Type drop-down menu.

3 Configure the filter criteria, if required, and click on the Search button.

4 Choose a PGW application from the results list and click on the Properties button. The PGW Application (Edit) form opens with the General tab displayed.

5 View the properties of the PGW instance under the following tabs:

- General
- Components
- Faults

6 Close the PGW Application (Edit) form.

7 Close the Manage PDN Gateways (PGW) form.

## Procedure 6-16 To view PGW interface properties

1 Choose Manage→Mobile Core→PGW/GGSN Instances from the 5620 SAM main menu. The Manage PDN Gateways (PGW) form opens.

2 Choose PGW Interface (LTE) from the Select Object Type drop-down menu.

3 Configure the filter criteria, if required, and click on the Search button.

4 Choose an PGW interface from the results list and click on the Properties button. The PGW Interface (Edit) form opens with the General tab displayed.

5 View the properties of the PGW interface under the following tabs:

- General
- Components
- PGW Interface Members
- Faults

6 Close the PGW Interface (Edit) form.

7 Close the Manage PDN Gateways (PGW) form.

### Procedure 6-17 To view PGW interface member properties

1 Choose Manage→Mobile Core→PGW/GGSN Instances from the 5620 SAM main menu. The Manage PDN Gateways (PGW) form opens.

2 Choose PGW Interface Member (LTE) from the Select Object Type drop-down menu.

3 Configure the filter criteria, if required, and click on the Search button.

4 Choose an PGW interface from the results list and click on the Properties button. The PGW Interface Member (Edit) form opens with the General tab displayed.

5 View the properties of the PGW interface members under the following tabs:

- General
- Components
- Faults

6 Close the PGW Interface Member (Edit) form.

7 Close the Manage PDN Gateways (PGW) form.

## 6.5 Configuring a 7750 MG for IP packet reassembly

IP packet fragmentation may occur due to MTU limitations in some networks. IP fragmentation occurs when an IP datagram travels through the network with a frame size larger than the MTU.

To facilitate IP packet reassembly on the 5620 SAM, you can configure a ISA IP Reassembly MDA on the second daughter card slot of an ISM mobile card. IP Packet reassembly can only performed on 7750 MG devices.

An ISA IP Reassembly MDA has two ports. You cannot modify these ports. Port 1 is the Network port and port 2 is the Access port.

## Procedure 6-18 To configure an IP reassembly daughter card on an ISM mobile card

1. Choose Equipment from the navigation tree view selector. The navigation tree displays the Equipment view.
2. Expand the Discovered NE objects in the navigation tree to display a 7750 MG device.
3. Expand the 7750 MG device to display the shelf object associated with the device.
4. Expand the shelf object to display the card slots associated with the shelf.
5. Locate and expand an ISM mobile card to display the daughter cards associated with the card.
6. Right-click on the second daughter card slot and choose Configure Daughter Card from the contextual menu. The Daughter Card Slot form opens with the General tab displayed.
7. Click on the Assigned Daughter Card Type drop-down menu and choose ISA IP Reassembly and click on the OK button. The Daughter Card Slot form closes.

## Procedure 6-19 To enable IP reassembly on a VPRN L3 access interface

To enable IP packet reassembly on a VPRN L3 access interface, you must assign a virtual IP reassembly port to the interface and add a unique context value.

**Note —** This procedure assumes you have an existing VPRN service configured on the 5620 SAM. To create a new VPRN service, see the VPRN Services Management chapter in the *5620 SAM User Guide*.

1. Choose Manage→Service→Services from the 5620 SAM main menu. The Manage Services form opens.
2. If required, configure the filter criteria and click on the Search button. A list of services is displayed.
3. Choose a VPRN service and click on the Properties button. The VPRN Service (Edit) form opens with the General tab displayed.
4. Click on the Components tab button.

5 Navigate to an interface icon below a site. The path is *service_type*→Sites→Routing Instance→Access Interfaces→Interface.

**Note —** If an Interface is not configured on the appropriate Access Interface, you can create one by right-clicking on the Access Interface and selecting Create VPRN L3 Access Interface.

6 Right-click on an interface and choose Properties from the contextual menu. The VPRN L3 Access form opens with the General tab selected.

7 Click on the IP Packet Reassembly form tab button.

8 Select the Reassembly check box. After the Reassembly parameter is configured, the form expands to display the Reassemble Packet and Reassembly Ports panels.

9 Click on the Select button beside the Name parameter in the Reassembly Ports panel. The Select Reassembly Ports form opens.

10 Click on the Search button. A list of available IP reassembly virtual access ports is displayed.

11 Select a port and click on the OK button. The Select Reassembly Ports form closes and the selected port is copied into the Name Parameter on the Reassembly Ports panel.

12 Configure the Context Value parameter in the Reassemble Packet panel and click on the OK button. A confirmation window displays.

13 Acknowledge the confirmation window by clicking on the Yes button. The VPRN L3 Access form closes and the port Reassembly status is displayed beside the Interface on the navigation tree.

The 5620 SAM creates a network interface on the VPRN that represents the IP reassembly virtual interface. The interface is read-only.

## Procedure 6-20 To configure IP packet reassembly on a network interface

To enable IP reassembly on a network interface, you are required to assign a virtual IP reassembly port to the interface and add a unique context value. You can assign individual physical ports or all ports associated with a LAG.

1 Choose Routing from the navigation tree view selector. The navigation tree displays the Routing view.

2 Expand the Discovered NE objects in the navigation tree to display a 7750 MG device.

3 Expand the 7750 MG device to display the Routing Instance associated with the device.

4 Expand the Routing Instance to display the Interfaces associated with the Routing Instance.

5 Right-click on a network interface and choose Properties from the contextual menu. The Network Interface Routing Instance form opens.

6 Click on the IP Packet Reassembly form tab button.

7 Select the Reassembly parameter. After the Reassembly parameter is configured, the form expands to display the Reassemble Packet and Reassembly Ports panels.

8 Click on the Select button beside the Name parameter in the Reassembly Ports panel. The Select Reassembly Ports form opens.

9 Click on the Search button. A list of available IP reassembly virtual network ports is displayed.

10 Select an individual port or all ports associated with a LAG and click on the OK button. The Select Reassembly Ports form closes and the selected port is pasted into the Name Parameter on the Reassembly Ports panel.

**Note —** A port which is already assigned to a LAG cannot be individually selected for IP Reassembly for an Interface.

11 Configure the Context Value parameter in the Reassemble Packet panel and click on the OK button. A confirmation window displays.

12 Acknowledge the confirmation window by clicking on the Yes button. The Network Interface Routing Instance form closes and the port Reassembly status is displayed beside the Interface on the navigation tree.

The 5620 SAM creates a network interface that represents the IP reassembly virtual interface. The interface is read-only.

## 6.6 Configuring a LAG on a 7750 MG

You can configure a LAG on a 7750 MG device using an ISA IP Reassembly MDA on the second daughter card slot of an ISM mobile card. A LAG is a group of physical ports that form one logical link between two NEs to increase bandwidth, allow load balancing, and provide seamless redundancy. LAG support over multiple devices provides node-level redundancy in addition to link-layer redundancy using a switchover function.

You can create an Access LAG or an Network LAG. Access LAGs are used when IP reassembly is required on a VPRN. Network LAGs are used when IP reassembly is required on a network interface.

## Procedure 6-21 To configure a LAG on a 7750 MG

1 Perform Procedure 6-18 to configure a IP reassembly daughter card on an ISM mobile card. The ports on this card is used to configure a LAG on a 7750 MG device.

2 Choose Equipment from the view selector in the navigation tree. The navigation tree displays the Equipment view.

3 Expand the LAGs object below the Logical Groups on a 7750 MG device in the Equipment view.

4 Right-click on a LAG object and choose Create LAG from the contextual menu. The Create LAG wizard opens.

5 In step 1 of the wizard, configure the following parameters and click on the Next button:

- Description
- Configured Address
- Mode (select the Network option to configure a Network LAG; select the Access option to configure a Access LAG)
- Encap Type (select the Dot1 Q option)

**Note —** See the *5620 SAM Parameter Guide* for a description of all LAG parameters.

6 As required, configure the parameters in step 2 (applies to both Access LAGs and Network LAGs) and step 3 (applied to Access LAGs only) of the wizard to meet your network requirements. Click on the Next button to proceed to the next step in the wizard to configure the LAG members.

7 Click on the Create button. The Create Member wizard opens.

8 In step 1 of the wizard, configure the Class parameter to Virtual Port. This is the class type associated with the port on an IP reassembly daughter card.

9 Click on the Next button. The port associated with the IP reassembly daughter cards created in step 1 display.

10 Select the appropriate port(s) and click on the Next button.

11 As required, configure the parameters in step 3 of the wizard to meet your network operational requirements.

12 Click on the Finish button to save and close the Create Member wizard. A warning dialog box appears.

13 Click on the OK button to acknowledge the warning. The Create LAG wizard form reappears displaying the configured LAG member.

**14** Click on the Finish button. The Create LAG wizard form summary displays.

**15** Click on the Close button to close the Create LAG wizard form. The LAG appears under the LAG Object on the navigation tree.

# 7 — Viewing 9471 MME properties

**7.1 Viewing 9471 MME properties overview** *7-2*

**7.2 9471 MME viewing procedures** *7-2*

## 7.1 Viewing 9471 MME properties overview

The 5620 SAM allows you to view the properties for the equipment, instance, interface function, application function, and packet handler for the 9471 MME. The 9471 MME equipment is represented in the 5620 SAM equipment navigation tree. You can view the 9471 MME properties by choosing Manage→Mobile Core→MME Instances from the 5620 SAM GUI main menu.

## 7.2 9471 MME viewing procedures

The following procedures describe how to view the 9471 MME properties.

### Procedure 7-1 To view 9471 MME network element properties

1. In the 5620 SAM equipment navigation tree, double-click on the 9471 MME component to expand the view.
2. Right-click on a discovered 9471 MME in the equipment navigation tree and choose Properties from the contextual menu. The Network Element (Edit) form opens with the General tab displayed.
3. The General tab displays a list of MME instances in the MME Service Dashboard panel. You can select an instance and view the properties of the instance.
4. Click on any of the following tabs for additional network element information:
   - Polling
   - Physical Links
   - Spans
   - Faults
5. Close the Network Element (edit) form.

### Procedure 7-2 To view 9471 MME shelf, shelf PDU, card, fan tray, card slot, and port properties

1. In the 5620 SAM equipment navigation tree, double-click on the 9471 MME component to expand the view.
2. Right-click on Shelf PDU and choose Properties from the contextual menu. The Shelf PDU (Edit) form opens with the General tab displayed.
3. View the properties of the shelf PDU under the following tabs:
   - General
   - Faults
4. Close the Shelf PDU (Edit) form.

5 Right-click on a 9471 MME shelf object and choose Properties from the contextual menu. The Shelf (Edit) form opens with the General tab displayed. The Equipment Dashboard panel displays a list of the cards and fan trays that are installed in the shelf.

6 Choose an ATCA card from the list and click on the Properties button. The Card (edit) form opens with the General tab displayed.

7 View the properties of the ATCA card under the following tabs:

- General
- Inventory
- Ports
- OAM Service Members
- AMC
- Hosts
- Statistics
- RTM
- Faults

8 Close the Card (edit) form.

9 Choose a fan tray from the list and click on the Properties button. The Fan Tray (edit) form opens with the General tab displayed.

10 View the properties of the fan tray under the following tabs:

- General
- Faults

You can also view a list of fan trays under the Fan Tray tab of the Shelf (Edit) form. Choose a fan try from the list and click on the properties button to view the fan tray properties.

11 Close the Fan Tray (edit) form.

12 Click on the Card Slots tab button to display a list of the shelf card slots.

13 Choose a card slot and click on the Properties button. The Card Slot (edit) form opens.

14 View the properties of each card slot under the following tabs:

- General
- Cards
- Terminations
- Faults

15 Close the Card Slot (Edit) form.

16 Click on the Ports tab button to display a list of ports on the ATCA hub cards.

17 Choose a port from the list and click on the Properties button. The Port (Edit) form opens with the General tab displayed.

18 View the properties of a port under the following tabs:

- General
- Physical Links
- Faults

**19** Close the Port (Edit) form.

**20** Click on the Faults tab button.

**21** View the shelf faults under the following subtabs:

- Object Alarms
- Affecting Alarms
- Aggregated Alarms
- Alarms on Related Objects

**22** Close the Shelf (Edit) form.

## Procedure 7-3 To view 9471 MME instance properties

**1** Choose Manage→Mobile Core→MME Instances from the 5620 SAM main menu. The Manage Mobility Management Entities (MME) form opens.

**2** Choose MME Instance (LTE) from the Select Object Type drop-down list..

**3** Configure the filter criteria, if required, and click on the Search button.

**4** Choose a 9471 MME instance from the results list and click on the Properties button. The MME Instance (Edit) form opens with the General tab displayed.

**5** View the properties of the 9471 MME instance under the following tabs:

- General
- Components
- EPS Peers
- Reference Points
- MME Interface Function
- MME Application Function
- Faults

**6** Close the MME Instance (Edit) form.

## Procedure 7-4 To view 9471 MME interface function properties

**1** Choose Manage→Mobile Core→MME Instances from the 5620 SAM main menu. The Manage Mobility Management Entities (MME) form opens.

**2** Choose MME Interface Function (LTE) from the object drop-down list.

**3** Configure the filter criteria, if required, and click on the Search button.

**4** Choose an interface function from the results list and click on the Properties button. The MME Interface Function form opens with the General tab displayed.

5 View the properties of the MME interface function under the following tabs:

- General
- Components
- MME Interface Function Service Group
- Faults

6 Close the MME Interface Function form.

## Procedure 7-5 To view 9471 MME application function properties

1 Choose Manage→Mobile Core→MME Instances from the 5620 SAM main menu. The Manage Mobility Management Entities (MME) form opens.

2 Choose MME Application Function (LTE) from the object drop-down list.

3 Configure the filter criteria, if required, and click on the Search button.

4 Choose an MME application function from the results list and click on the Properties button. The MME Application Function form opens with the General tab displayed.

5 View the properties of the MME application function under the following tabs:

- General
- Components
- MME Application Function Service Group
- Faults

6 Close the MME Application Function form.

## Procedure 7-6 To view 9471 MME packet handler properties

1 Choose Manage→Mobile Core→MME Instances from the 5620 SAM main menu. The Manage Mobility Management Entities (MME) form opens.

2 Choose MME Packet Handler (LTE) from the object drop-down list.

3 Configure the filter criteria, if required, and click on the Search button.

4 Choose an MME application function from the results list and click on the Properties button. The MME Packet Handler form opens with the General tab displayed.

**5** View the properties of the MME packet handler under the following tabs:

- General
- Components
- MME Packet Handler Service Group
- Faults

**6** Close the MME Packet Handler form.

# 8 — Viewing 5780 DSC properties

**8.1 Viewing 5780 DSC properties overview** *8-2*

**8.2 5780 DSC viewing procedures** *8-2*

## 8.1 Viewing 5780 DSC properties overview

The 5620 SAM allows you to view the properties for the equipment, instance, diameter proxy agent, and policy charging rules for the 5780 DSC. The 5780 DSC equipment properties are represented in the 5620 SAM equipment navigation tree. The instance, diameter proxy agent, and policy charging rules properties are accessed from the main menu in the 5620 SAM GUI by choosing Manage→Mobile Core→Dynamic Services Controller (DSC).

## 8.2 5780 DSC viewing procedures

The following procedures describe how to view the 5780 DSC properties.

### Viewing 5780 DSC equipment properties

You can use the equipment navigation tree to monitor 5780 DSC components. The equipment navigation tree identifies the 5780 DSC by the deployment type:

- ATCA
- non-ATCA

The 5620 SAM equipment navigation tree models both deployment types with the same component hierarchy. Similarly, the properties forms that you can open from each level of the component hierarchy contain the same tabs and fields for both deployment types. Perform Procedure 8-1 to view the properties of the 5780 DSC NE.

#### Procedure 8-1 To view 5780 DSC network element properties

1. In the 5620 SAM equipment navigation tree, double-click on the 5780 DSC-ATCA or 5780 DSC-Non-ATCA component to expand the view.
2. Right-click on a 5780 DSC NE icon and choose Properties from the contextual menu. The Network Element (Edit) form opens with the General tab displayed. The tab displays read-only parameters.

3 For information about a specific instance of a 5780 DSC, perform the following:

i In the DSC Service Dashboard panel, choose a 5780 DSC instance.

ii Click on the Properties button. The DSC Instance (Edit) form opens with the General tab displayed. You can view additional properties for the 5780 DSC instance under the following tabs:

- Components
  - DSC Diameter Proxy Agent
  - DSC Policy Charging Rules Function
  - Service Group
  - Service Member
- Diameter Peers
- ISU State
- Faults

**Note —** You can view the availability status of a 5780 DSC instance, DSC DPA, DSC PCRF, and DSC PCRF group object on the General tab of the related Properties (Edit) form. The availability status is:

- Degraded—if any child is down and the parent operational status is up, or if all children are down and the parent operational status is down
- Normal—when all children are up, and the parent operational status is up

iii Click on the Cancel button to close the DSC Instance (Edit) form.

4 Click on any of the following tabs in the Network Element (Edit) form for more information about the 5780 DSC NE:

- Polling
- Physical Links
- Spans
- Faults

5 Close the Network Element (edit) form.

## Procedure 8-2 To view 5780 DSC shelf, card, fan tray, power supply, card slot, and port properties

1 Choose Equipment from the view selector in the equipment navigation tree. The equipment navigation tree displays the Equipment view.

2 Right-click on a 5780 DSC shelf object and choose Properties from the contextual menu. One of the following forms appears with the General tab displayed, depending on the deployment model:

- Shelf - 5780 DSC - ATCA (Edit)
- Shelf - 5780 DSC - Non-ATCA (Edit)

3 For information about the specific equipment that is provisioned in the shelf, perform the following:

   i In the Equipment Dashboard panel, choose a card and click on the Properties button. The Card (Edit) form opens with the General tab displayed.

   ii Click on any of the following tab buttons for more information about the 5780 DSC card:

   - Inventory
   - Ports
   - OAM Service Members
   - CPUs
   - Disks
   - Faults

   iii Close the Card (Edit) form.

4 Click on the Fan Trays tab button in the Shelf (Edit) form to display a list of the fan trays.

**Note —** The Fan Tray tab button is only available for an ATCA-based 5780 DSC.

5 Choose a fan tray and click on the Properties button. The Fan Tray (Edit) form opens with the General tab displayed.

6 Click on any of the following tab buttons for more information about the fan tray:

   - Fan
   - Faults

7 Close the Fan Tray (Edit) form.

8 Click on the Power Supply tab button in the Shelf (Edit) form to display a list with Power Supply A and Power Supply B.

**Note —** The Power Supply tab button is only available for an ATCA-based 5780 DSC.

9 Choose a power supply and click on the Properties button. The Power Supply (Edit) form opens with the General tab displayed.

10 Click on the Faults tab button for more information about the power supply.

11 Close the Power Supply (Edit) form.

12 Click on the Card Slots tab button in the Shelf (Edit) form to display a list of the shelf card slots. The number of blades that appear depend on the deployment model.

13 Choose a card slot and click on the Properties button. The Card Slot (Edit) form opens with the General tab displayed.

14 Click on any of the following tab buttons for additional information about the card:

- Cards
- Terminations
- Faults

15 Close the Card Slot (edit) form.

16 Click on the Ports tab button in the Shelf (Edit) form to display a list of ports.

17 Choose a port from the list and click on the Properties button. The Port (Edit) form opens with the General tab displayed.

18 Click on any of the following tab buttons for more information about the port:

- IP Addresses
- Physical Links
- Faults

19 Close the Port (Edit) form.

20 Click on the Faults tab button in the Shelf (Edit) form.

21 Click on any of the following tab buttons to view any shelf faults:

- Object Alarms
- Affecting Alarms
- Aggregated Alarms
- Alarms on Related Objects

22 Close the Shelf (Edit) form.

## Procedure 8-3 To view 5780 DSC instance properties

1 Choose Manage→Mobile Core→DSC Instances from the 5620 SAM main menu. The Manage Dynamic Services Controller Entities (DSC) form opens.

2 Choose DSC Instance (LTE) from the object drop-down list.

3 Configure the filter criteria, if required, and click on the Search button.

4 Choose a 5780 DSC instance from the results list and click on the Properties button. The DSC Instance (Edit) form opens with the General tab displayed.

5 View the properties of the 5780 DSC instance under the following tabs:

- General
- Components
  - DSC Diameter Proxy Agent
  - DSC Policy Charging Rules Function
  - Service Group
  - Service Member
- Diameter Peers
- ISU State
- Faults

**Note —** You can view the availability status of a 5780 DSC instance, DSC DPA, DSC PCRF, and DSC PCRF group object on the General tab of the related Properties (Edit) form. The availability status is:

- Degraded—if any child is down and the parent operational status is up, or if all children are down and the parent operational status is down
- Normal—when all children are up, and the parent operational status is up

6 Close the DSC Instance (Edit) form.

## Procedure 8-4 To view diameter proxy agent properties

1 Choose Manage→Mobile Core→DSC Instances from the 5620 SAM main menu. The Manage Dynamic Services Controller Entities (DSC) form opens.

2 Choose Diameter Proxy Agent (LTE) from the object drop-down list.

3 Configure the filter criteria, if required, and click on the Search button.

4 Choose a diameter proxy agent from the results list and click on the Properties button. The Diameter Proxy Agent (Edit) form opens with the General tab displayed.

5 View the properties of the diameter proxy agent under the following tabs:

- General
- Components
  - Diameter Proxy Agent
  - Service Member
- Faults

**Note —** You can view the availability status of a 5780 DSC instance, DSC DPA, DSC PCRF, and DSC PCRF group object on the General tab of the related Properties (Edit) form. The availability status is:

- Degraded—if any child is down and the parent operational status is up, or if all children are down and the parent operational status is down
- Normal—when all children are up, and the parent operational status is up

6 Close the Diameter Proxy Agent (Edit) form.

## Procedure 8-5 To view policy charging rules properties

1 Choose Manage→Mobile Core→DSC Instances from the 5620 SAM main menu. The Manage Dynamic Services Controller Entities (DSC) form opens.

2 Choose Policy Charging Rules (LTE) from the object drop-down list.

3 Configure the filter criteria, if required, and click on the Search button.

4 Choose a policy charging rule from the results list and click on the Properties button. The Policy Charging Rules (Edit) form opens with the General tab displayed.

5 View the properties of the policy charging rules under the following tabs:

- General
- Components
  - Policy Charging Rules
  - Service Group
  - Service Member
- Faults

**Note —** You can view the availability status of a 5780 DSC instance, DSC DPA, DSC PCRF, and DSC PCRF group object on the General tab of the related Properties (Edit) form. The availability status is:

- Degraded—if any child is down and the parent operational status is up, or if all children are down and the parent operational status is down
- Normal—when all children are up, and the parent operational status is up

6 Close the Policy Charging Rules (Edit) form.

## Procedure 8-6 To view policy charging rules group properties

1 Choose Manage→Mobile Core→DSC Instances from the 5620 SAM main menu. The Manage Dynamic Services Controller Entities (DSC) form opens.

2 Choose Policy Charging Rules Group (LTE) from the object drop-down list.

3 Configure the filter criteria, if required, and click on the Search button.

4 Choose a policy charging rule group from the results list and click on the Properties button. The Policy Charging Rules Group (Edit) form opens with the General tab displayed.

**5** View the properties of the PCR group under the following tabs:

- General
- Components
  - Policy Charging Rules
  - Service Member
- Faults

**Note —** You can view the availability status of a 5780 DSC instance, DSC DPA, DSC PCRF, and DSC PCRF group object on the General tab of the related Properties (Edit) form. The availability status is:

- Degraded—if any child is down and the parent operational status is up, or if all children are down and the parent operational status is down
- Normal—when all children are up, and the parent operational status is up

**6** Close the Policy Charging Rules Group (Edit) form.

# 9 — Configuring LTE ePC mobile regions


**9.1 LTE ePC mobile region overview** *9-2*

**9.2 Workflow to configure a mobile region** *9-2*

**9.3 Mobile region configuration procedures** *9-2*

## 9.1 LTE ePC mobile region overview

The 5620 SAM allows you to configure and view mobile regions. The region is configured with a region name, an MCC, and an MNC. The values are used in combination to identify SGW and PGW instances. The MCC and MNC settings are based on ITU-T Recommendation E.212.

The Mobile Node Name parameter, which is in the Mobile Node ID panel of the PDN Gateway (Edit) and Serving Gateway (Edit) forms, is derived in part from mobile node region name.

## 9.2 Workflow to configure a mobile region

1. Create the mobile region.
2. Assign a mobile region to an SGW or a PGW.
3. View the properties of the mobile region.

## 9.3 Mobile region configuration procedures

The following procedures describe how to configure an LTE ePC mobile region. You can create multiple mobile regions in the LTE network.

**Note —** After you configure a mobile region, you must assign the region to an appropriate SGW or PGW. After you assign the region to a gateway, you can click on the ePC Gateway tab button to list the elements that are associated with the region.

### Procedure 9-1 To create a mobile region

1. Choose Manage→Mobile Core→Mobile Regions from the 5620 SAM main menu. The Manage Mobile Regions form opens.
2. Click on the Create button. The Mobile Node Region (Create) form opens with the General tab displayed.
3. Configure the parameters:
   - Region ID
   - Region Name
   - Mobile Network Code
   - Auto-Assign ID
   - Mobile Country Code

   The Region ID parameter is read-only when you configure the Auto-Assign ID parameter. When you select Auto-Assign ID, the Region ID is assigned by the system when you save or apply the mobile region parameters.

4 Click on the OK button to save the parameter settings. The Mobile Node Region (Create) form closes. The Manage Mobile Regions form reappears and displays the newly configured region in the Mobile Node Region (LTE) list.

5 Close the Manage Mobile Regions form.

## Procedure 9-2 To assign a mobile region to an SGW or a PGW

1 Perform one of the following:

   a To assign a mobile region to an SGW, go to step 2.

   b To assign a mobile region to a PGW, go to step 3.

2 Assign a mobile region to an SGW.

   i Choose Manage→Mobile Core→SGW Instances from the 5620 SAM main menu. The SGW Instances form opens.

   ii Choose Serving Gateway (LTE) from the Select Object Type drop-down menu.

   iii Configure the filter criteria, if required, and click on the Search button. The form lists the available SGWs.

   iv Choose a gateway instance from the list and click on the Properties button. The Serving Gateway (Edit) form opens with the General tab displayed.

   v In the Mobile Node Region panel, click on the Select button. The Select Mobile Node Region form appears. The form lists the mobile regions that are configured, as described in Procedure 9-1.

   vi Choose a mobile region and click on the OK button. The Serving Gateway (Edit) form closes. The name of the mobile region appears in the Region Name field of the Serving Gateway (Edit) form.

   vii Click on the Apply button. A dialog box opens.

   viii Click on the Yes button. The mobile name appears in the Mobile Node Name field in the Mobile Node ID panel.

   ix Close the Serving Gateway (Edit) form.

   x Close the SGW Instances form.

3 Assign a mobile region to a PGW.

   i Chose Manage→Mobile Core→PGW Instances from the 5620 SAM main menu. The Manage PDN Gateways (PGW) form opens.

   ii Choose PDN Gateway (LTE) from the Select Object Type drop-down menu.

   iii Configure the filter criteria, if required, and click on the Search button. The form lists the available PGWs.

**iv** Choose a gateway instance from the list and click on the Properties button. The PDN Gateway (Edit) form opens with the General tab displayed.

**v** In the Mobile Node Region panel, click on the Select button. The Select Mobile Node Region form appears. The form lists the mobile regions that you created in Procedure 9-1.

**vi** Choose a mobile region and click on the OK button. The PDN Gateway (Edit) form closes. The name of the mobile region appears in the Region Name field of the PDN Gateway (Edit) form.

**vii** Click on the Apply button. A dialog box opens.

**viii** Click on the Yes button. The mobile name appears in the Mobile Node Name field in the Mobile Node ID panel.

**ix** Close the PDN Gateway (Edit) form.

**x** Close the Manage PDN Gateways (PGW) form.

## Procedure 9-3 To view the properties of a mobile region

**1** Choose Manage→Mobile Core→Mobile Regions from the 5620 SAM main menu. The Manage Mobile Regions form opens. The regions appear in the Mobile Node Region list.

**2** Choose a mobile region or configure a filter to search for the mobile region that you need to view and click on the Properties button. The Mobile Node Region (Edit) form appears.

**3** Click on the Properties button. The Mobile Regions (Edit) form opens with the General tab displayed.

**4** View the properties under the following tabs:

- General—View the parameters of the mobile region.
- EPC Gateway—View the gateways that are associated with the region.

**5** Close the Mobile Regions (Edit) form.

**6** Close the Manage Mobile Regions (Edit) form.

# *LTE ePC path and mobile service management*

**10 — EPS path topology map**

**11 — Viewing LTE ePC peers and paths**

**12 — Transport layer correlation for EPS paths**

**13 — Mobile service management**

# 10 — EPS path topology map


**10.1 EPS path topology map overview** *10-2*

**10.2 EPS path topology menu** *10-5*

**10.3 EPS path topology map management procedures** *10-6*

# 10.1 EPS path topology map overview

The EPS path topology map displays a static representation of mobile network objects and EPS paths. Each network object icon represents an aggregate of all network objects of that type. For SGWs and PGWs, the icon represents an aggregate of all instances of that gateway type and all network objects that contain instances of that type. Each EPS path link represents an aggregate of all EPS paths of a specific type. Figure 10-1 shows the main elements of the mobility topology map.

**Figure 10-1 EPS path topology map elements**

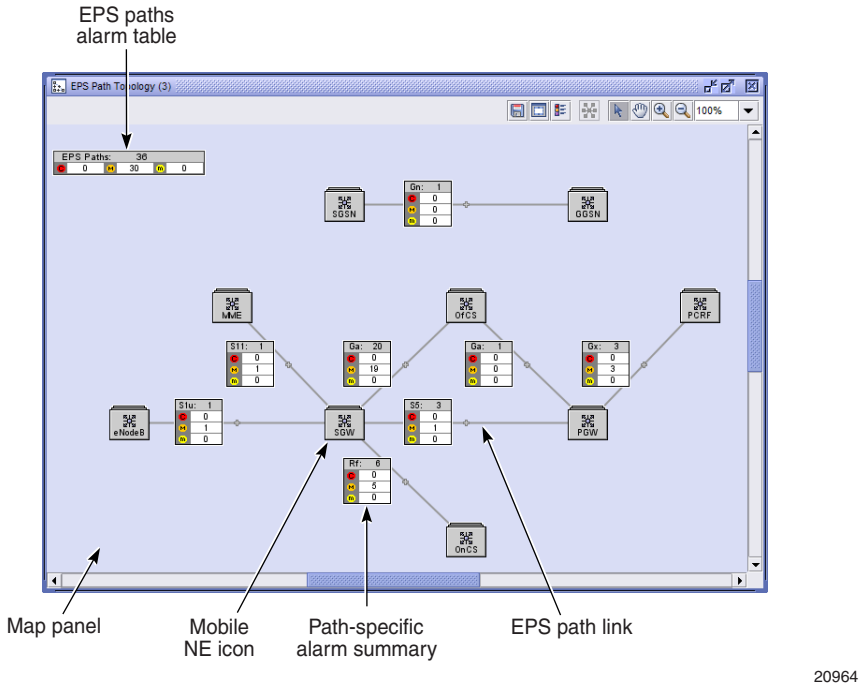


## EPS path topology map window

The EPS path topology map window consists of:

- a titlebar
- a map panel that displays the network objects
- a map toolbar which consists of a collection of buttons that are used to manage the map view

The titlebar of the map window displays the following information:

- map type, which is EPS Path Topology in this case
- map number, which indicates the order in which the map was opened; for example, whether it is the first or the tenth map opened. There is no limit to the number of topology maps that you can have open at the same time.

## EPS path topology map panel

The EPS path topology map panel displays a static map of the mobile network that contains:

- icons that represent an aggregate of the unmanaged mobile NEs and gateways
- icons that represent an aggregate of a mobile NE type or instance
- links between network elements that represent an aggregate of the EPS paths, such as S5
- an EPS path aggregated alarm table for each type of path
- an EPS aggregated alarm table for all EPS paths in the network; the table displays the total number of EPS paths and the number of paths that have at least one critical, major, and minor alarm
- icons that represent functions, such as the offline charging system

### Selecting map objects

Click on the Select Tool button to select an object on the map. You can select multiple objects by pressing the Shift key and clicking on each object you need to select, or by drawing a selection rectangle around all of the objects you need to select on the topology map. You can select all of the NEs that are attached to an NE by selecting one or more NEs, right-clicking, and choosing Select Attached from the contextual menu. You can deselect a selected NE by pressing the CTRL key and clicking on the NE you need to deselect.

### Moving map objects

You cannot move the map objects.

### EPS path links

The map displays links that represent all EPS paths of a specific type between two mobile NEs or instances. You can right-click on a link to display a list of EPS paths.

### Alarm tables

Each EPS path link is associated with an alarm table. There is also a path alarm table for the mobile network.

## Zoom in and out using a mouse

The ability to zoom in and out on a map allows you to increase or decrease the size of the map. Use the mouse wheel to zoom in and zoom out of the map. Click on the map and roll the mouse wheel forward to zoom in or roll the mouse wheel backward to zoom out. Each roll of the mouse wheel brings the map objects closer or farther.

## EPS path topology map toolbar

The EPS path topology map toolbar allows you to manage the view of the map. The toolbar appears above the map panel in the map window. Figure 10-2 shows the map toolbar and its elements.

**Figure 10-2 Map toolbar elements**

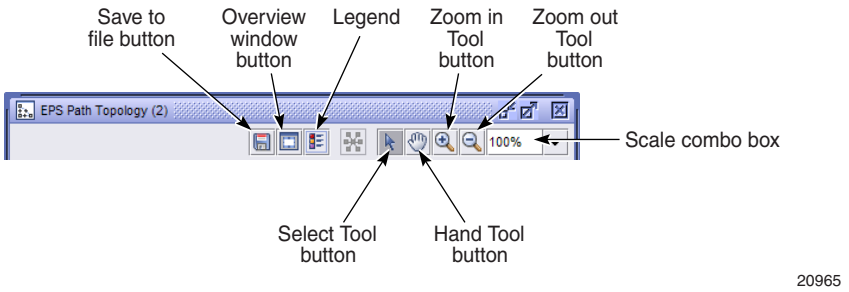


### Save To File button

Click on the Save To File button to save the map view or the full map. You can choose the location to save the map image and the file type. See Procedure 10-3 for more information about using the Save To File button. Figure 10-3 shows the Save To File button.

**Figure 10-3 Save To File button**

### Overview Window button

Click on the Overview Window button to open the Overview window. Use the Overview window to pan the entire map and the area that you want to view.

### Legend Tool button

Click on the Legend Tool button to open the Legend - EPS Path Topology window. The window contains a table that explains the meaning of the topology map icons. Figure 10-4 shows the Legend - EPS Path Topology display.

**Figure 10-4 Legend - EPS Path Topology**

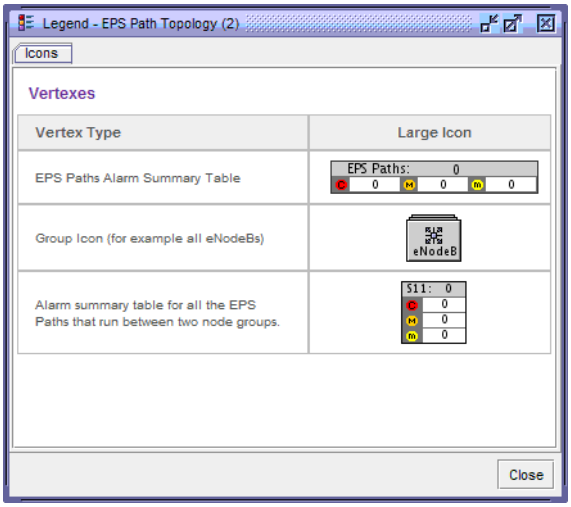


### Select Tool button

Click on the Select Tool button to select an object on the map. You can select multiple objects by pressing the Shift key and clicking on each object you want to select, or by drawing a selection rectangle around all the objects you want to select on the mobility topology map.

### Hand Tool button

Click on the Hand Tool button to switch to a pan mode. Click on the background to move the contents of the map in any direction.

### Zoom in and zoom out using a Mouse or Tool buttons

The ability to zoom in and out on a map allows you to view details of the map. Click on the Zoom in Tool and Zoom out Tool buttons, and click on the map to resize the objects in a map or use the mouse wheel to zoom in and zoom out of topology maps. Click on the map and roll the mouse wheel forward to zoom in or roll the mouse wheel backward to zoom out. Each roll of the mouse wheel brings the map objects closer or farther.

### Scale combo box

Use the scale combo box to increase or decrease the zoom in the map. You can choose a zoom percentage value from 25% to 300%, or fit all objects in the window from the drop-down menu. The scale combo box displays the current scale of the map.

## 10.2 EPS path topology menu

Table 10-1 lists the EPS path topology menu item and its function.

**Table 10-1 5620 SAM map management menu**

| Menu option | Function |
|---|---|
| Application→EPS Path Topology | View the EPS path topology map |

## 10.3 EPS path topology map management procedures

Perform the following procedures to perform map management tasks.

### Procedure 10-1 To open the EPS path topology map

1 Choose Application→EPS Path Topology from the 5620 SAM main menu.

2 The EPS path topology map appears.

See Procedure 10-2 for information about the map elements. See section 10.1 for information about the map view.

### Procedure 10-2 To view EPS path topology map elements

1 Open an EPS path topology map, as described in Procedure 10-1. Figure 10-1 shows the map main elements.

2 View the NEs, links, and alarm tables, as required:

a View the EPS path topology map icons that represent mobile network NEs. Table 10-2 describes the map icons.

**Table 10-2 EPS path topology map icons**

| Map icon type | Description |
|---|---|
| MME | Represents all of the managed MME devices and MME devices that have an EPS path to another NE.<br>When you right-click on an MME icon, you can choose to display a list of all MME instances represented by the icon or all NEs that contain an MME instance. See chapter 7 for more information about viewing MME properties. |
| SGW | Represents all of the managed SGW instances and all of the managed network elements that contain SGW instances.<br>When you right-click on an SGW icon, you can choose to display a list of all gateway instances represented by the icon or all NEs that contain an SGW instance. See chapter 6 for more information about configuring SGWs. |
| PGW | Represents all of the managed PGW instances and all of the managed network elements that contain PGW instances.<br>When you right-click on a PGW icon, you can choose to display a list of all gateway instances represented by the icon or all NEs that contain a PGW instance. See chapter 6 for more information about configuring PGWs. |

**(1 of 2)**

| Map icon type | Description |
|---|---|
| PCRF | Represents all of the managed PCRF devices in the network and the PCRF devices that have an EPS path to another NE.<br>When you right-click on a PCRF icon, you can choose to display a list of all DSC instances represented by the icon or all NEs that contain a DSC instance. See chapter 8 for more information about viewing DSC properties. |
| GGSN | Represents the Gateway GPRS Support Node (GGSN) instances and all managed network elements that contain GGSN instances.<br>When you right-click on a GGSN icon, you can choose to display a list of PGWs that are functioning as GGSNs. |
| SGSN | Represents the Serving GPRS Support Node (SGSN) instances.<br>When you right-click on an SGSN icon, you can choose to display a list of all unmanaged elements of type SGSN. |
| eNodeB | Represents all of the network elements of type eNodeB. |
| OfCS | Represents the offline charging system, a charging system where charging information does not affect, in real-time, the service being delivered. |
| OnCS | Represents the online charging system, a charging system where charging information can affect, in real-time, the service being delivered. |

**(2 of 2)**

**b** View the EPS path links. The EPS path links, which appear in the map between NEs, represent an aggregate of all of the EPS paths of a specific type. Right-click on a link and click on the menu item to display a list of all of the EPS paths that are represented by the link. You can choose a path from the list to view or modify the path properties.

**c** View the EPS path alarm tables. Table 10-3 describes the EPS path alarm tables.

**Table 10-3 EPS path alarm tables**

| Alarm table type | Description |
|---|---|
| EPS path-specific alarm tables | Each EPS path type is associated with an alarm table that is displayed over the path link on the map. Each alarm table displays the:<br>• path type<br>• total number of paths represented by the link<br>• rows that display the number of paths with at least one critical, major, or minor alarm |
| EPS paths alarm table | There is one EPS paths alarm table associated with the topology map. The EPS paths alarm table displays the:<br>• total number of paths of all types in the mobile network<br>• total number of paths of all types that have at least one critical, major, or minor alarm |

## Procedure 10-3 To save a map view to a file

You can use the Save to File button to save a portion of a map or the entire map to the local file system. You can save the file to JPEG, JPG, BMP, and PNG formats.

1 Open an EPS path topology map, as described in Procedure 10-1.

2 Click on the Save To File button. The save options are displayed in the drop-down menu.

3 Choose an option from the drop-down menu:

- Choose Save Map View to save the current view.
- Choose Save Full Map to save the entire map view.

The Save form appears.

4 Save the results.

**i** To choose a directory in which to save the listed information, configure the Save In parameter.

**ii** To create a filename, configure the File Name parameter.

**iii** Choose BMP, JPEG, JPG, or PNG from the File of Type drop-down menu.

**iv** Click on the Save button. The map view is saved to the specified file.

## Procedure 10-4 To zoom in and zoom out of a map

1 Open an EPS path topology map, as described in Procedure 10-1.

2 Perform one of the following:

**a** Use the mouse wheel to zoom in and zoom out. Click on the map. To zoom in, roll the mouse wheel forward. To zoom out, roll the mouse wheel backward.

**b** Click on the Zoom in Tool or Zoom out Tool button. Go to step 3.

3 Move your cursor into the map panel. The icon changes to a magnifying glass that contains a + or - sign.

4 Click on the area of the map you need to expand or contract. The map expands or contracts. Continue clicking until the required zoom level is reached.

5 Use the opposite button and an equal number of clicks to return the map to the default setting.

6 To return to the pointer icon, click on the Select Tool button in the toolbar.

## Procedure 10-5 To view and modify EPS path information

1. Open an EPS path topology map, as described in Procedure 10-1.
2. To list EPS paths, perform one of the following.
   - **a** Using an EPS path link:
     - **i** Right-click on the EPS path link for the type of path that you need to list.
     - **ii** Click on the displayed menu item. An EPS paths form opens that displays a list of paths.
     - **iii** Choose a path from the list and click on the Properties button. The properties edit form for the EPS path opens.
   - **b** Using the EPS path alarm table:
     - **i** Right-click on the EPS path alarm table at the top of the EPS path topology map.
     - **ii** Click on the menu item. The EPS Paths form opens.
     - **iii** Click on the Select Object Type button and choose the type of path from the list.
     - **iv** Click on the Search button. A list of paths appears.
     - **v** Choose a path from the list and click on the Properties button. The path type edit form opens.
3. View and modify the path information, as required.
4. Close the path edit form.
5. Close the EPS paths form.

# 11 — Viewing LTE ePC peers and paths

**11.1 Viewing EPS peers and paths overview** *11-2*

**11.2 Viewing the properties of EPS peers and paths** *11-3*

## 11.1 Viewing EPS peers and paths overview

The 5620 SAM allows you to view the status, statistics, state, and faults associated with the EPS peers and paths.

Each peer or path combines a pair of matching reference points and peer objects of two ePC nodes in a managed entity. Reference points are based on the LTE 3GPP standard, and are created automatically when you configure an LTE node such as an SGW or a PGW. EPS paths are created dynamically when LTE peer devices are signaled. After the 5620 SAM resynchronizes a control session, the EPS peers and EPS paths are discovered by the 5620 SAM.

**Note —** The signaling interfaces must be configured on the LTE ePC device before the 5620 SAM can discover EPS peers and paths. See Procedure 6-1 for information about how to configure signaling on an SGW and Procedure 6-9 for information about how to configure signaling on a PGW.

### EPS peers

EPS peers are neighboring nodes that share the endpoints of an EPS path. An example is an S5 EPS path: one endpoint is always an SGW and the other endpoint is always a PGW. The PGW and the SGW are EPS peers.

The 5620 SAM supports the following types of peers:

- diameter-based
- GTP/PMIP-based

### EPS paths

An EPS path is a point-to-point connection between LTE nodes that is used for bearer control. EPS paths include:

- eNodeB to SGW (S1-U path)
- SGW to PGW (S5 path)
- SGW to MME (S11 path)
- PGW to PCRF (Gx path)
- SGW to CCF (Rf path)

The 5620 SAM allows you to discover and list all of the EPS paths in the entire mobile network or on a specific node. You can filter using specific parameters, such as type, status, and IP address, to display specific bearer paths.

EPS paths are single-sided or double-sided:

- single-sided—the 5620 SAM manages only one endpoint, such as the following:
  - S11 path between the SGW and the MME, where only the SGW is managed by the 5620 SAM
  - Gx path between the PGW and the PCRF, where only the PGW is managed by the 5620 SAM
  - S1-U path between the SGW and the eNodeB, where only the SGW is managed by the 5620 SAM
  - Rf path between the SGW and the CFF, where only the SGW is managed by the 5620 SAM
- double-sided—the 5620 SAM manages both endpoints, such as the S5 interface between the SGW and PGW, where both gateways are managed by the 5620 SAM

## 11.2 Viewing the properties of EPS peers and paths

The following procedures describe how to view the properties of EPS peers and paths.

### Procedure 11-1 To view the properties of EPS peers from the EPS Peers and Paths form

1. Choose Manage→Mobile Core→EPS Peers and Paths from the 5620 SAM main menu. The Manage EPS Peers and Paths form opens.
2. Choose Evolved Packet Solution Peer (LTE) from the Select Object Type drop-down menu. The supported types of peers appear as subtending objects in the Evolved Packet Solution Peer (LTE) navigation tree.

3 Perform one of the following to choose a type of peer from the drop-down menu:

a Diameter Based Peer (LTE)

- AGW Diameter Peer (LTE)
  - Gx AGW Peer (LTE)
  - Rf AGW Peer (LTE)
- DSC Diameter Peer (LTE)

b GTP/PMIP Based Peer (TLE)

- AGW GTP/PMIP Peer (LTE)
  - S11 SGW Peer (LTE)
  - S1u SGW Peer (LTE)
  - S5 AGW Peer (LTE)
  - S8 AGW Peer (LTE)
- MME GTP/PMIP Peer (LTE)
  - Gn MME Peer (LTE)
  - S10 MME Peer (LTE)
  - S11 MME Peer (LTE)
  - S13 MME Peer (LTE)
  - S1mme MME Peer (LTE)
  - S3 MME Peer (LTE)
  - S6a MME Peer (LTE)
  - SG MME Peer (LTE)
  - Sv MME Peer (LTE)

4 Configure the filter criteria, if required, and click on the Search button. The form lists the available EPS peers.

5 Choose an EPS peer from the list and click on the Properties button. The EPS Peer form opens with the General tab displayed.

6 Click on the following tab buttons for additional information:

- Diameter—lists the Diameter management state, detailed state, profile name, and profile index. This tab applies only to Gx and Rf peers.
- Statistics—lists the statistics associated with the peer
- Faults—lists the faults associated with the EPS peer according to the following alarm types:
  - Object Alarms
  - Affecting Alarms
  - Aggregated Alarms
  - Alarms on related Objects

7 Click on the Cancel button to close the form.

## Procedure 11-2 To view the properties of EPS paths from the EPS Peers and Paths form

1. Choose Manage→Mobile Core→EPS Peers and Paths from the 5620 SAM main menu. The Peers and Paths form opens.

2. Choose Evolved Packet Solution Path (LTE) from the Select Object Type drop-down menu. The following supported paths appear as subtending objects in the Evolved Packet Solution Path (LTE) navigation tree:

   - Gx Path (LTE)
   - Rf Path (LTE)
   - S11 Path (LTE)
   - S1u Path (LTE)
   - S5 Path (LTE)

3. Configure the filter criteria, if required, and click on the Search button. The form lists the available EPS paths.

4. Choose an EPS path from the list and click on the Properties button. The EPS Path properties form opens with the General tab displayed.

5. Click on the following tab buttons for additional information:

   - Tree—lists the component tree that is associated with the path
   - Drill Down—see Procedure 12-3 for more information about how to perform the manual drill-down operation. Drill-down is not supported on the Rf EPS paths.
   - Components—this tab is populated only after the drill-down operation is performed
   - Discovery Log—a log appears if the drill-down operation fails
   - Faults—lists the faults associated with the EPS path according to the following alarm types:
     - Object Alarms
     - Affecting Alarms
     - Aggregated Alarms
     - Alarms on related Objects

6. Click on the Cancel button to close the form.

# 12 — Transport layer correlation for EPS paths


12.1 Transport layer correlation with EPS paths overview *12-2*

12.2 Workflow for transport layer correlation for EPS paths *12-4*

12.3 EPS path drill-down hints *12-4*

12.4 EPS path drill-down hint creation and validation *12-6*

12.5 Drill-down operation prerequisites and restrictions by path type *12-9*

12.6 Performing a manual drill-down operation *12-11*

12.7 Troubleshooting drill-down operations *12-13*

# 12.1 Transport layer correlation with EPS paths overview

This chapter describes how to use the 5620 SAM to manage the transport layer that underlies the EPS paths.

## EPS paths

EPS paths are created automatically when the 5620 SAM recognizes a discovered peer and a discovered reference point on a managed entity, such as an SGW. The EPS paths are classified by their symmetry. Symmetry for EPS paths is determined by whether both EPS path endpoints are fully managed by the 5620 SAM. The symmetry types are:

- single-sided—When the 5620 SAM recognizes only one side of an interface, the 5620 SAM creates a single-sided path.
- double-sided—When the 5620 SAM recognizes both sides of an interface, the 5620 SAM forms an entity with two peers and two reference points, known as a double-sided path.

## Transport segments of EPS paths

An EPS path encapsulates the connection between two endpoints within the LTE network. Each EPS path has at least one transport segment. Some EPS paths, such as an S1-U EPS path, can contain multiple transport segments. The drill-down operation correlates the alarms of each segment with the EPS paths and provides information to perform diagnostic analyses when an EPS path is down.

## EPS path drill-down hints

To diagnose and manage faults which may occur in the transport layer that underlies an EPS path, you must provision the 5620 SAM with a group of EPS path drill-down hints that represent the transport topology of the network. The 5620 SAM uses the hints to correlate the transport segments with the EPS paths.

A drill-down hint is a list of entries where each entry consists of a pair of entities: a segment and a connection. The possible types of segments are:

- eNodeB to NE—One of the endpoints of the segment is an eNodeB. The other endpoint is another NE that is managed by the 5620 SAM.
- NE to NE—Both of the endpoints of the segment are NEs that are managed by the 5620 SAM.
- NE to SGW—One of the endpoints of the segment is an SGW. The other endpoint is an NE that is managed by the 5620 SAM.
- SGW to PGW—Both of the endpoints of the segment are managed by the 5620 SAM.
- SGW to MME—One endpoint of the segment is an SGW that is managed by the 5620 SAM. The other endpoint is an MME.
- PGW to PCRF—One endpoint of the segment is a PGW that is managed by the 5620 SAM. The other endpoint is a PCRF.

The possible types of connections are:

- physical link
- managed spoke connector (applicable to the NE to NE segment)
- managed L2 transport (applicable to the NE to SGW segment)
- unmanaged L2 transport

### High-priority hints

Because you can have hundreds of hints configured for your network, it is advantageous from a performance perspective to limit the number of hint profiles that the 5620 SAM must process during the automatic correlation of the transport layer with the new EPS paths. To avoid delays in the correlation process, you can specify a set of hints that the 5620 SAM uses to correlate a new EPS path with the transport layer. These hints are referred to as high-priority hints. You can configure up to five high-priority hints for each path type. See Procedure 12-1 for more information about how to configure a hint using the High Priority parameter.

## EPS path drill-down operations

The drill-down operation uses the path drill-down hints to correlate the underlying transport layer with the EPS paths. The types of drill-down operations are:

- automatic
- manual

### Automatic drill-down operation

When the 5620 SAM creates an EPS path, the 5620 SAM parses the list of high-priority EPS path drill-down hints to identify the segments that comprise the underlying transport layer.

**Note —** Only high-priority hints are used for the automatic drill-down operation.

Because you have already configured the IP address of the endpoints for each peer of an EPS path, the 5620 SAM automatically attempts to traverse the path that you configured in the hint to determine whether there is connectivity with the IP address of the designated peer. The 5620 SAM attempts to apply each hint to the underlying network, starting with the first hint in the hint list. If the first high-priority hint fails, the 5620 SAM tries the second hint, if available. If any segment within a hint fails to discover components, an alarm is generated and the degree of success of the drill-down is indicated in the Hint Matching Level field. If the drill-down operation is successful, the list of underlying objects are listed in the Components tab on the EPS Path properties form.

#### Manual drill-down operation

There are no real-time updates to the list of components that identify the underlying transport elements of an EPS path. If the network topology changes and the list of components changes, the 5620 SAM does not automatically update the components. The manual drill-down operation allows you to update the list of components.

The manual drill-down operation forces the 5620 SAM to try to correlate an EPS path with a discovered set of underlying components using one specified hint or a set of high-priority hints. Depending on the outcome of the operation, the 5620 SAM returns a success or failure notification. If a manual drill-down operation fails, the 5620 SAM does not attempt to apply another hint. You must manually choose a different hint and repeat the drill-down operation.

If you do not choose a hint for a specified path, the 5620 SAM applies the high-priority hints when you perform the manual drill-down operation. See Procedure 12-3 for more information about how to perform the manual drill-down operation.

#### Hint matching level

The Hint Matching Level field indicates the degree of success for an EPS path drill-down operation. The hint matching level is an indication of the number of successfully discovered hint segments expressed as a percentage of the total number of hint segments. For example, if a drill-down hint contains three segments and the drill-down operation successfully discovers two of those segments, the hint matching level is 66%. The State field value is Failed for anything less than a 100% drill-down success.

## 12.2 Workflow for transport layer correlation for EPS paths

1. Review the supported hint criteria and restrictions.
2. For automatic drill-down, perform step 3; for manual drill-down, perform step 4.
3. Create the EPS path drill-down hints before you configure a node for management. The drill-down operation is automatically performed when the node is discovered.
4. Create the EPS path drill-down hints and perform the manual drill-down operation to correlate the EPS path with the transport layer.

## 12.3 EPS path drill-down hints

This section describes the hints, transport segments, and connections that are supported by the 5620 SAM for each EPS path type. The EPS path drill-down hints apply only to S1-U, S5, S11, and Gx paths.

### S1-U path drill-down hints

Table 12-1 lists the hints for S1-U paths that the 5620 SAM supports.

**Table 12-1 S1-U path hints, transport segments, and connections**

| Hint | Segment | Connection |
|---|---|---|
| 1 | eNodeB to NE | Physical link |
| | NE to NE | Managed Spoke Connector [(1)] |
| | NE to SGW | Managed L2 Transport |
| 2 | eNodeB to NE | Physical link |
| | NE to NE | Managed Spoke Connector [(1)] |
| | NE to SGW | Unmanaged L2 Transport |
| 3 | eNodeB to NE | Physical link |
| | NE to NE | Managed Spoke Connector [(1)] |
| | NE to SGW | Physical link |

Note

(1) The L2 VPN topology must be an Epipe SAP facing the eNodeB and spoked to a VPLS with a SAP facing the SGW. No other topology is supported for the NE to NE segment.

## S5 path drill-down hints

Table 12-2 lists the hints for S5 paths that the 5620 SAM supports.

**Table 12-2 S5 path hints, transport segments, and connections**

| Hint | Segment | Connection |
|---|---|---|
| 1 | SGW to PGW | Physical link |
| 2 | SGW to PGW | Unmanaged L2 Transport |

## S11 path drill-down hints

Table 12-3 lists the hints for S11 paths that the 5620 SAM supports.

**Table 12-3 S11 path hints, transport segments, and connections**

| Hint | Segment | Connection |
|---|---|---|
| 1 | SGW to MME | Physical link |
| 2 | SGW to MME | Unmanaged L2 Transport |

## Gx path drill-down hints

Table 12-4 lists the hints for Gx paths that the 5620 SAM supports.

**Table 12-4 Gx path hints, transport segments, and connections**

| Hint | Segment | Connection |
|---|---|---|
| 1 | PGW to PCRF | Physical link |
| 2 | PGW to PCRF | Unmanaged L2 Transport |

## 12.4 EPS path drill-down hint creation and validation

Perform Procedure 12-1 to create an EPS path drill-down hint.

### Procedure 12-1 To create an EPS path drill-down hint

1. Choose Manage→Mobile Core→LTE EPS Path Drill Down Hints from the 5620 SAM main menu. The Manage EPS Path Drill-Down Hints form appears.
2. Click on the Create button. The EPS Path Drill Down Hint (Create) form opens with the General tab displayed.
3. Configure the parameters:
   - ID (or Auto-Assign ID)
   - Description
   - Type—Choose the type of EPS path from the drop-down menu. The options are:
     - Gx
     - S11
     - S1-u
     - S5
   - High Priority
4. Click on the Segments tab button.
5. Click on the Create button. The EPS Path Segment (Create) form appears.
6. Configure the Order parameter. The Order parameter is an ordinal value that specifies the position of the segments in the hint. The Gx, S11, and S5 hints have only one segment: the value must be 1. The S1-U hint has three segments: the value must be 1, 2, or 3 depending on the segment type. See Table 12-1 for more information.
7. Enter a name in the Description field.
8. Configure the Segment Type parameter. The segment types that are available depend on the path type that you specified in step 3. Table 12-5 lists the available transport segment types for each EPS path type.

**Table 12-5 EPS path transport segment types**

| EPS path type | Transport segment type |
|---|---|
| GX | PGW-PCRF |
| | unspecified |
| S1-U | NE-NE |
| | NE-SGW |
| | eNodeB-NE |
| | unspecified |
| S11 | SGW-MME |
| | unspecified |
| S5 | SGW-PGW |
| | unspecified |

**9** Configure the Connection Type parameter. The connection types that are available depend on the segment type that you specified in step 8. Table 12-6 lists the available connection types for each segment type.

**Table 12-6 EPS path connection types**

| EPS path type | Segment type | Connection types | | | | |
|---|---|---|---|---|---|---|
| | | Unmanaged L2 Transport | Managed Spoke Connector | Managed L2 Transport | Physical link | Unspecified |
| GX | PGW-PCRF | ✓ | | | ✓ | ✓ |
| S1-U | NE-NE | | ✓ | | | ✓ |
| | NE-SGW | ✓ | | ✓ | ✓ | ✓ |
| | eNodeB-NE | | | | ✓ | ✓ |
| S11 | SGW-MME | ✓ | | | ✓ | ✓ |
| S5 | SGW-PGW | ✓ | | | ✓ | ✓ |
| all | unspecified | ✓ | ✓ | ✓ | ✓ | ✓ |

**10** Configure the Encapsulation Values parameter. The parameters are available only for S1-U NE-NE segments with a managed spoke connector.

- Encapsulation Type
  - Null
  - Dot1 Q
  - Q in Q
- Inner Encapsulation Value
- Outer Encapsulation Value

The Outer Encapsulation Value parameter is configurable only when the encapsulation type is Dot1 Q or Q in Q. The Inner Encapsulation Value parameter is configurable only when the encapsulation type is Q in Q.

**11** Click on the Apply button.

**12** Repeat steps 5 to 11 to add another segments, as required. The order of the hints must be configured according to the type of EPS path, as listed in Tables 12-1 to 12-4.

**13** Click on the OK button. The newly configured hint appears in the EPS Path Drill-Down Hint (Edit) form. If a Problems Encountered warning window opens, perform Procedure 12-2.

## EPS path drill-down hint validation

When you create an EPS path drill-down hint, the hint is validated according to the following criteria:

- order of segments in a hint
- incorrect set of segments
- incorrect number of segments

If any of the validation checks fail, a Problems Encountered warning window opens to help you with troubleshooting.

## Troubleshooting EPS path drill-down hint creation errors

If the 5620 SAM cannot validate a hint when you attempt to create it, the create procedure fails and a Problems Encountered warning window opens.

### Procedure 12-2 To troubleshoot EPS path drill-down hint creation errors

1 In the Problems Encountered warning window, double-click on the item in the list to view information about the failed hint. The error form displays the following information:

- Operation—Describes the type of operation that has the error. The error pertains to the configuration of a network object that subtends the EPS path; for example, ConfigureChildInstance.
- Request ID—The value is N/A.
- Affected Object—for example, ddmgr:hint-*n*:*m*,

  where

  *n* represents the hint number

  *m* represents the segment number
- Task Name—The value is N/A.
- Class—The class of the object that failed. For example, lte.EPSPathDiscoveryHint.
- Received Time—The time when the error occurred.
- Description—includes information about the following:
  - Application—the application that failed. For example, app: EPSPath drill down hint.
  - Class—The class of the object that failed. For example, class: lte.EPSPathDiscoveryHint.
  - Instance—The object that failed. For example, instance: ddmgr: hint-1.
  - Description—A description of the error. For example, descr: The first segment must be eNodeB-to-NE, and the connection type has to be physical link.

2 Review the information in the form, especially the Description field.

3 Review the supported hint types, as described in section 12.3.

4 Repeat Procedure 12-1 and ensure that the hint conforms to the supported hint types.

## 12.5 Drill-down operation prerequisites and restrictions by path type

This section describes the prerequisites and restrictions that apply to the drill-down operation.

### General prerequisites and restrictions

The drill-down operation is supported only on S1-U, S5, S11, and Gx paths. The drill-down operation is not supported on Rf EPS paths.

For double-sided paths, the drill-down operation recognizes physical links that are created between the two managed NEs. For single-sided paths, the path does not have the site ID for the endpoint B; only the IP address that identifies the endpoint B. The drill-down operation can only recognize a physical link that is created between a managed NE (endpoint A) and an unmanaged NE or gateway identified by the IP address of endpoint B.

## S1-U path drill-down operation prerequisites and restrictions

The following prerequisites and restrictions apply to S1-U path correlation:

- The following prerequisites apply to hint 1:
  - An Epipe is created on the 7705 SAR node.
  - A VPLS is created on the 7750 SR node.
  - A manually created physical link must exist between the eNodeB and the port used in the SAP in the Epipe on the 7705 SAR node.
- The following prerequisites apply to hint 2:
  - An Epipe is created on the 7705 SAR node.
  - A VPLS is created on the 7750 SR node. For CCAG, the SAP in the VPLS must use a CCAG (sap-net or net-sap).
  - A manually created physical link exists between the eNodeB and the port used in the SAP in the Epipe on the 7705 SAR node.
- The following prerequisites apply to hint 3:
  - An Epipe is created on the 7705 SAR node.
  - A VPLS is created on the 7750 SR node.
  - A manually created physical link exists between the eNodeB and the port used in the SAP in the Epipe on the 7705 SAR node.
  - A manually created physical link exists between the 7750 SR node and SGW. The endpoints must be configured as NEs with site IP addresses and no port information.
- The automatic drill-down operation is not initiated when an S1-U EPS peer is discovered because an S1-U path requires a physical link that starts from the eNodeB.
- The automatic drill-down operation is initiated when a physical link is created, but only when the endpoint B is of type Unmanaged NE and the IP address matches an Unmanaged NE of type eNodeB known to the 5620 SAM.

## S5 path drill-down operation prerequisites and restrictions

The following prerequisites and restrictions apply to S5 path correlation:

- For hint 1, a manually configured physical link exists between the SGW and PGW.
- For hint 2, the SGW and the PGW must be on the same subnet for an unmanaged L2 transport connection.
- The automatic drill-down operation is initiated only for a new double-sided S5 EPS path.
- Only double-sided S5 EPS paths are supported.
- Single-sided S5 paths result in a failure.

### S11 path drill-down operation prerequisites and restrictions

The following prerequisites and restrictions apply to S11 path correlation:

- For hint 1, you must configure a physical link between the SGW and the MME before you can perform the drill-down operation on a physical link. If there is more than one physical link, the drill-down operation fails.
- For hint 2, the SGW and the MME must be on the same subnet for an unmanaged L2 Transport connection.
- The automatic drill-down operation is initiated when the 5620 SAM discovers a new single-sided S11.
- Only single-sided S11 EPS paths are supported because the 5620 SAM does not manage the connection on the MME side.

### Gx path drill-down operation prerequisites and restrictions

The following prerequisites and restrictions apply to Gx path correlation:

- For hint 1, you must configure a physical link between the PGW and the PCRF before you can perform the drill-down operation on a physical link. If there is more than one physical link, the drill-down operation fails.
- For hint 2, the PGW and the PCRF must be on the same subnet for an unmanaged L2 Transport connection.
- The automatic drill-down operation is initiated when the 5620 SAM discovers a new single-sided Gx.
- Only single-sided Gx EPS paths are supported because the 5620 SAM does not manage the connection on the PCRF side.

## 12.6 Performing a manual drill-down operation

Procedure 12-3 describes how to perform a manual drill-down operation.

### Procedure 12-3 To perform a manual drill-down operation

1. Open an EPS Path (Edit) properties form from one of the following:
   - EPS Peers and Paths form, as described in Procedure 11-2
   - EPS path topology map, as described in Procedure 10-1
2. Click on the Drill Down tab button.
3. Perform one of the following:
   - **a** To drill down with high-priority hints, go to step 6.
   - **b** To drill down with a specific hint, go to step 4.
4. Click on the Select button in the Hint panel to choose an EPS path drill-down hint. The Select Hint form for the specified path type opens.

**5** Choose an EPS path drill-down hint from the list and perform one of the following:

**a** Click on the Properties button to view the properties of the hint, if required.

**b** Change the properties of the hint, as described in Procedure 12-1, if required.

**c** Click on the OK button.

The Select Hint form closes and the ID of the EPS path drill-down hint appears in the Hint panel of the Drill Down tab. The State field value is Not attempted, which indicates that the drill-down operation has not yet been performed. Go to step 7.

**6** Verify that the value of the ID field in the Hint panel is 0. If the value is not 0, click on the Clear button.

**7** Click on the Drill Down button in the bottom panel of the Drill Down tab.

**8** Review the status of the operation in the State and Hint Matching Level fields. The status changes from Not attempted to one of the following:

- Success—Go to step 9.
- Failed—See section 12.7 or more information about how to monitor and troubleshoot failed drill-down operations.

The degree of drill-down success is indicated by the Hint Matching Level field.

**9** Click on the Components tab button to view the segments that were correlated. Each line in the table represents one of the transport layer components of the EPS path instance and is identified by the following properties:

- Name
- Description
- Component Type
- Alarm Status
- Aggregated Alarm Status

**10** Double-click on an entry listed in the Components tab, or choose an entry and click the Properties button. The EPSPath*Component_Type*Component (View) form opens with the General tab displayed, where *Component_Type* is the transport layer component, such as Link, Service, or Interface.

The fields that appear in the General tab depend on the type of component. Each form shows the associated subcomponents of the path type, such as a service, spoke, Layer 3 interface, or physical link, and each of these components has a Properties button.

**11** Click on the Properties button to view information about the subcomponents, or click on the Faults tab button to view the alarms associated with the object.

You can continue to drill down into the underlying network components by opening successive properties forms, viewing the properties of the object, identifying any associated alarms, and troubleshooting any faults that may exist. See chapter 16 for more information about LTE ePC alarm management.

## 12.7 Troubleshooting drill-down operations

This section describes how to troubleshoot drill-down operation failures. If a drill-down operation fails, the value of the State field in the Drill Down tab changes to Failed and the 5620 SAM generates an alarm on the EPS path.

The 5620 SAM generates an alarm on the EPS path for any of the following conditions:

- an automatic drill-down operation fails using the available high-priority hints
- a manual drill-down operation fails
- a partial match is established, that is, the 5620 SAM failed to correlate all of the segments of a path drill-down hint

### Drill-down operation failure logs and alarms

The 5620 SAM logs each drill-down request and generates an alarm if the drill-down operation on an EPS path fails. If the drill-down operation fails, you can use the Drill Down Log tab on the EPS paths properties form to obtain additional information about the failure. Possible reasons for a failure are:

- network architecture is incorrectly configured
- EPS path drill-down hint is configured incorrectly and does not represent the network architecture
- EPS path drill-down hint is configured correctly but the underlying transport layer has changed
- EPS path drill-down hint is missing

Perform Procedure 12-4 to troubleshoot a failed drill-down operation.

#### Procedure 12-4 To troubleshoot a drill-down operation

1. Perform a drill-down operation, as described in Procedure 12-3.
2. In the EPS Path (Edit) properties form for the selected EPS path, click on the Drill Down Log tab button. The Drill Down Log tab displays a list of failure logs.
3. Choose a log entry in the list and click on the Properties button to obtain more information. The Drill Down Log (View) form opens with the General tab displayed. The General tab displays the following information:
   - Number
   - Error
   - Log Time
   - Object
   - Message
4. Click on the Faults tab button. The Faults tab lists the alarms that affect the object.

# 13 — Mobile service management


**13.1 Mobile service overview** *13-2*

**13.2 Sample mobile service** *13-2*

**13.3 Mobile service characteristics** *13-2*

**13.4 Mobile service creation and update process** *13-2*

**13.5 Mobile service management menu** *13-2*

**13.6 Mobile service management procedures** *13-3*

## 13.1 Mobile service overview

A mobile service allows a provider of an LTE network to better manage the mobile delivery distribution network from the IP core to the eNodeB access nodes. The mobile service represents the connectivity between network components and is comprised of the eNodeB, SGW, and PGW. The sites are joined by S1-U and S5 EPS paths, which are also referred to as connectors.

## 13.2 Sample mobile service

Figure 13-1 shows the components of a sample mobile service.

**Figure 13-1 Sample mobile service**

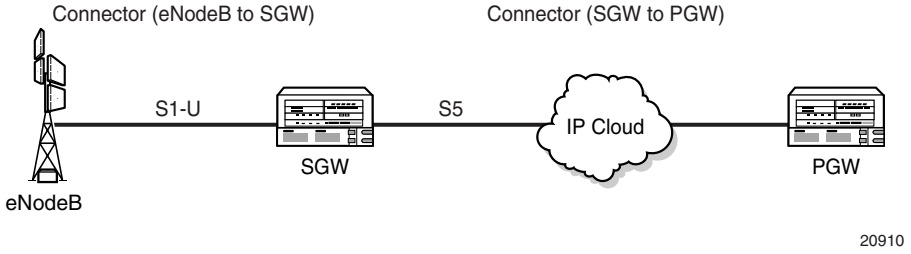


## 13.3 Mobile service characteristics

The 5620 SAM automatically creates, updates, and deletes a mobile service as sites and paths are added to or removed from the service.

## 13.4 Mobile service creation and update process

1. A user call placed through an eNodeB triggers the creation of a S1-U path.
2. The 5620 SAM creates an eNodeB unmanaged mobile NE; the eNodeB serves as the anchor for the mobile service.
3. The creation of an eNodeB unmanaged mobile NE triggers the creation of a mobile service.
4. The 5620 SAM creates a partial mobile service if all of the components needed for a complete service have not been discovered.
5. The 5620 SAM dynamically updates a mobile service when components are added or deleted.

## 13.5 Mobile service management menu

Table 13-1 lists the 5620 SAM service management menu.

**Table 13-1 Mobile service management menu**

| Menu option | Function |
|---|---|
| Manage→Mobile Core→Mobile Services | View and manage a mobile service |

## 13.6 Mobile service management procedures

Perform the following procedures to view and manage a mobile service.

### Procedure 13-1 To view and modify mobile service properties

**Caution —** Modifying parameters can be service-affecting.

1 Choose Manage→Mobile Core→Mobile Services from the 5620 SAM main menu. The Manage Mobile Services form opens.

2 Configure the list filter criteria, and click on the Search button. A list of mobile services appears at the bottom of the Manage Mobile Services form.

3 Choose a mobile service and click on the Properties button. The eNodeB Mobile Service (Edit) form opens with the General tab displayed.

The following tabs list the service elements that can be individually or collectively selected and configured:

- General tab — displays information about the eNodeB based mobile service; click on the Properties button to view the properties of the service eNodeB NE
- Components tab — displays the mobile service components in a tree format; right-click on a site or component and choose Properties to view the properties of the selected item
- Model tab — displays a graphical representation of the mobile service components
- EPC Gateways tab — lists the mobile service sites; choose a site and click on the Properties button to view the properties of the selected site
- Unmanaged Network Elements tab — lists the mobile service unmanaged network elements; choose an unmanaged network element and click on the Properties button to view the properties
- Unmanaged PDN Gateways — lists the mobile service unmanaged PDN gateways; choose an unmanaged PDN gateway and click on the Properties button to view the properties
- EPS Paths — lists the mobile service EPS paths; choose a path and click on the Properties button to view the properties
- Faults tab — displays the faults associated with the service

4 Modify the parameters for the service, as required.

5 Click on the OK button. A dialog box appears.

6 Click on the Yes button to confirm the action. The eNodeB Mobile Service (Edit) form closes and the Manage Mobile Services form reappears.

7 Click on the Close button to close the Manage Mobile Services form.

# *LTE ePC profiles and policies configuration*

**14 — Configuring LTE ePC profiles and policies**

# 14 — Configuring LTE ePC profiles and policies


**14.1 LTE ePC profiles and policies overview** *14-2*

**14.2 Workflow to configure LTE ePC profiles and policies** *14-4*

**14.3 LTE ePC profiles and policies configuration and viewing procedures** *14-6*

## 14.1 LTE ePC profiles and policies overview

The 5620 SAM supports the LTE-specific profiles and policies—all of which are modeled using the 5620 SAM policy framework. This chapter assumes that you are familiar with the following topics:

- general concepts about 5620 SAM policies
- policy distribution and scaling
- draft and release modes
- policy audits using the 5620 SAM Tools→Policies Audit menu
- mismatches between local and global policies
- other profile types supported by the 5620 SAM

See the policies overview in the *5620 SAM User Guide* for more information about routine tasks, such as how to distribute, modify, copy, synchronize, or delete a policy.

### Diameter peer profile

The diameter peer profile provides peer-related information to the diameter applications. A diameter peer profile cannot be deleted when the profile is referenced by a diameter application.

### Diameter profile

The diameter profile defines the parameters that are related to diameter connections. A diameter profile is referenced by the diameter peer profiles. Multiple diameter peer profiles can reference the same diameter profile. The diameter local configuration must be provisioned before you can provision the diameter profiles. A diameter profile can be referenced on the SGW or PGW signaling instance and on the diameter peer profile. A diameter profile cannot be deleted when the profile is referenced by a diameter application.

### GTP prime server group profile

A GTP prime server group profile defines the properties and members of a GTP server group. The policy is applied to the Ga interface on a PGW.

### GTP profile

The GTP profile can be used to configure the GTP control plane between the following entities:

- SGW and PGW signaling
- SGW and PGW over the S5 interface
- SGW and MME over the S11 interface

The GTP profile can be used to configure the GTP user plane between the following entities:

- eNodeB and SGW over the S1-U interface
- SGW and PGW over the S5 interface

## QCI policies

A QCI policy profile configures the minimum level of QoS to be applied to the applications in multivendor deployments. The QCI polices can be applied to the SGW and PGW.

## PGW charging profile

A PGW charging profile specifies the charging rules that can be applied to a particular type of subscriber, such as home, visiting, or roaming. A PGW charging profile is applied to a PGW instance.

## SGW charging profile

An SGW charging profile specifies the charging rules that can be applied to a particular type of subscriber, such as home, visiting, or roaming. An SGW charging profile is applied to an SGW instance.

## PLMN list profile

A PLMN list profile specifies the charging rules that can be applied to a PLMN. A PLMN list profile is applied to a PGW instance.

## Lawful Intercept

LI describes the interception and monitoring of network subscriber traffic by authorized agencies for law enforcement purposes. For more information about LI, see the *5620 SAM User Guide*.

### LTE LI delivery function peer policy

An LTE LI delivery function peer policy can be applied to the SGW and PGW. The policy specifies the server that is used to collect the intercepted data, reformat the data according to industry standards, and forward the data to the law enforcement agency. The delivery functions relate to the 3GPP Technical Specifications 33.107 and 33.108.

- Delivery Function 2 distributes intercepted data, that is information associated with telecommunications services that involve the target, but that exclude the content of communications; for example, the number of unsuccessful communication attempts or target location.
- Delivery Function 3 distributes the intercepted content of communications, which is the data sent or received by the target, such as speech, fax, or data.

### LTE LI interception target policy

An LTE LI interception target policy specifies the target of interception. The policy can be applied to the SGW and PGW. The only target identity supported is IMSI.

### Workflow to configure LI on an LTE ePC gateway

1 Perform the workflow to configure LI on the 5620 SAM, as described in the *5620 SAM User Guide*.

2 As an LI user on the 5620 SAM, perform Procedure 14-18 to configure the LTE LI delivery function peer policy.

3 As an LI user on the 5620 SAM, perform Procedure 14-19 to configure the LTE LI interception target policy.

## 14.2 Workflow to configure LTE ePC profiles and policies

**1** Review the information about profiles and policies in the *5620 SAM User Guide*.

**2** Determine the LTE profiles and policies that are required.

**3** Create and distribute profiles and policies. Profiles and policies are applied during the configuration or modification of LTE devices and services. When and how you apply a policy depends on the policy type and the device on which the policy is to be applied. LTE policies are created for and can be applied to more than one reference point. Table 14-1 describes where and when you can apply the profiles or policies.

**Note —** Policies do not need to be explicitly distributed; policies are distributed to a device when they are assigned to a resource on the device.

**Table 14-1 Applying profiles and policies**

| Item | Applied to | When applied | See Procedure |
|---|---|---|---|
| GTP | SGW signaling | During SGW configuration | 6-1 |
| | PGW signaling | During PGW configuration | 6-9 |
| | SGW reference points | During S11, S1-U, S5 reference point configuration | 6-2 |
| | PGW reference points | During S5 reference point configuration | 6-10 |
| GTP prime server group | PGW reference point | During Ga reference point configuration | 6-10 |
| Diameter | SGW signaling | During SGW configuration | 6-1 |
| | PGW signaling | During PGW configuration | 6-9 |
| Diameter peer | SGW reference points | During Rf reference point configuration | 6-2 |
| | PGW reference points | During Gx reference point configuration | 6-10 |
| QCI policy | APN | When adding an APN to an SGW | 6-3 |
| | SGW | After SGW configuration | 6-5 |
| | PGW | After PGW configuration | 6-14 |
| PGW charging profile | PGW | During PGW configuration | 6-13 |
| SGW charging profile | PGW | During SGW configuration | 6-4 |
| PLMN list policy | PGW | After PGW configuration | 14-16 |
| LTE LI delivery function peer policy | PGW<br>SGW | During LTE LI configuration | 14-18 |
| LTE LI interception target policy | PGW<br>SGW | During LTE LI configuration | 14-19 |

**Warning 1 —** Alcatel-Lucent recommends that you make all changes to policy configurations for the 5620 SAM-managed devices using the 5620 SAM or OSS clients that send configuration data to the 5620 SAM. The intent is to ensure that any policy ID—for example, an access ingress policy with ID 4—has the same configuration on each device managed by the 5620 SAM.

**Warning 2 —** Creating or modifying policies using the CLI may cause inconsistencies in the configuration parameters of a policy throughout the network. See the *5620 SAM User Guide* for information about how to locate discrepancies in policies using a policy audit.

## 14.3 LTE ePC profiles and policies configuration and viewing procedures

The following procedures describe how to configure and view LTE profiles and policies.

After you configure a profile or policy, additional tabs appear in the edit properties form that allow you to do the following:

- view where and how a profile or policy is used
- manage faults associated with the profile or policy

### Procedure 14-1 To configure a GTP profile

1. Choose Policies→Mobile→LTE Profiles and Policies from the 5620 SAM main menu. The LTE Profiles form opens.
2. Choose GTP Profile (LTE) from the Select Object Type drop-down menu.
3. Perform one of the following:
   - **a** Specify a filter to search for and modify an existing policy. Choose a policy in the filtered list and click on the Properties button.
   - **b** Click on the Create button. The GTP Profile, Global Policy (Create) form opens.
4. Configure the parameters:
   - Displayed Name
   - Message Retransmit timeout(s)
   - Keep-Alive Timeout(s)
   - Keep-Alive T3 Response Times(s)
   - IP DSCP
   - Message Retransmit Retry Count
   - Keep-Alive Retry Count
   - IP TTL
5. Click on the Apply button. The GTP Profile, Global Policy (Edit) form opens with the General tab displayed. The Configuration Mode parameter in the Policy Configuration panel is in the Draft state. The Distribute button at the bottom of the form is dimmed. The policy cannot be distributed.
6. Release the policy and distribute the policy to as many routers as required. when you release the global policy, the policy is also distributed to existing local definitions. See the *5620 SAM User Guide* for information about how to distribute a policy.
7. Close the GTP Profile, Global Policy (Edit) form.

## Procedure 14-2 To view a GTP profile

1 Choose Policies→Mobile→LTE Profiles and Policies from the 5620 SAM main menu. The LTE Profiles form opens.

2 Choose GTP Profile (LTE) from the Select Object Type drop-down menu.

3 Specify a filter to search for a policy, choose a policy in the filtered list, and click on the Properties button. The GTP Profile—Global Policy (Edit) form opens.

4 Click on the following tab buttons in the GTP Profile—Global Policy (Edit) form to view the properties of the profile, and the associated NEs, reference points, and faults.

- General—to view the general properties of the GTP profile, such as the parameters configured in Procedure 14-1.
- Local Definitions—to view the NEs to which the policy has been distributed.
- Gn, S11, S1u, and S5—to view the properties of the reference points that use this policy. See Procedure 6-2 for information about how to configure the S11, S1u, and S5 reference points on the SGW; see Procedure 6-10 for information about how to configure the S5, Gn, and Ga reference points on the PGW.
- Signaling—to view the properties of the signaling interfaces that use this policy. See Procedure 6-1 for information about how to configure signaling on the SGW; see Procedure 6-9 for information about how to configure signaling on the PGW.
- Faults—to identify faults and to navigate to alarm information.

5 Close the GTP Profile, Global Policy (Edit) form.

## Procedure 14-3 To configure a GTP prime server group profile

1 Choose Policies→Mobile→LTE Profiles and Policies from the 5620 SAM main menu. The LTE Profiles form opens.

2 Choose GTP Prime Server Group Profile (LTE) from the Select Object Type drop-down menu.

3 Perform one of the following:

a Specify a filter to search for and modify an existing policy. Choose a policy in the filtered list and click on the Properties button.

b Click on the Create button. The GTP Prime Server Group Profile, Global Policy (Create) form opens with the General tab displayed.

**4** Configure the parameters:

- Displayed Name
- Description
- Maximum CDRs per PDU
- Dead Time (seconds)
- Inactive Time (minutes)
- Administrative State
- Queue Size
- File Obsolete Time (days)
- File Private Info
- File Extension
- File Closure Size (Mbytes)
- File Closure Max Records
- File Closure Life Time (hours)
- Primary Compact Flash

**5** Configure the Configuration File Limit (Mbytes) in the CDR Storage on cf1 panel.

**6** Configure the Configuration File Limit (Mbytes) in the CDR Storage on cf2 panel.

**7** Click on the GTP Primary Server Addresses tab button.

**8** Click on the Create button. The GTP Primary Server List Entry, Global Policy (Create) form opens.

**9** Configure the parameters:

- Administrative State
- Primary Server Address
- Server Port
- Retries
- Time Out (seconds)
- Echo Interval (seconds)
- Maximum Requests
- Server Priority

**10** Click on the Apply button to add the server to the server list. A dialog box appears.

**11** Click on the OK button.

**12** Repeat steps 9 to 11 for each server that you need to add.

**13** When you configure the last server click on the OK button to add it to the list. The GTP Primary Server List Entry, Global Policy (Create) form closes and a dialog box appears.

**14** Click on the OK button.

**15** Click on the Apply button. The GTP Prime Server Group Profile, Global Policy (Edit) form opens with the General tab displayed. The Configuration Mode parameter in the Policy Configuration panel is in the Draft state. The Distribute button at the bottom of the form is dimmed. The policy cannot be distributed.

**16** Release the policy and distribute the policy to as many routers as required. when you release the global policy, the policy is also distributed to existing local definitions. See the *5620 SAM User Guide* for information about how to distribute a policy.

**17** Close the GTP Prime Server Group Profile, Global Policy (Edit) form.

## Procedure 14-4 To view a GTP prime server group profile

1 Choose Policies→Mobile→LTE Profiles and Policies from the 5620 SAM main menu. The LTE Profiles form opens.

2 Choose GTP Prime Server Group Profile (LTE) from the Select Object Type drop-down menu.

3 Specify a filter to search for a policy, choose a policy in the filtered list, and click on the Properties button. The GTP Prime Server Group Profile, Global Policy (Edit) form opens.

4 Click on the following tab buttons to view the properties of the profile and the associated NEs, reference points, and faults.

- General—to view the general properties of the GTP profile, such as the parameters configured in Procedure 14-3.
- GTP Primary Server Addresses—to view a list of primary servers in the group
- Local Definitions—to view the NEs to which the policy has been distributed.
- Ga—to view the properties of the reference points that use this policy. See Procedure 6-10 for information about how to configure the Ga reference point on a PGW.
- Faults—to identify faults and navigate to alarm information.

5 Close the GTP Prime Server Group Profile, Global Policy (Edit) form.

## Procedure 14-5 To configure a diameter profile

The diameter profile provides a template for the configuration of diameter protocol parameters such as connection time, retry count, and IP DSCP values.

1 Choose Policies→Mobile→LTE Profiles and Policies. The LTE Profiles form opens.

2 Choose Diameter Profile (LTE) from the Select Object Type drop-down menu.

3 Perform one of the following:

a Specify a filter to search for and modify an existing profile. Use the filters to search for and open an existing profile by choosing a profile in the filtered list and clicking on the Properties button.

b Click on the Create button. The Diameter Profile, Global Policy (Create) form opens.

4 Configure the parameters:

- Displayed Name
- Description
- Connection Timer (s)
- DPR Timeout (s)
- IP DSCP
- IP TTL (S)
- Retry count
- Transaction Timer (s)
- Watch Dog Timer (s)
- Retry Time (min)
- DNS Refresh Time (s)

5 Click on the Apply button. The Diameter Profile, Global Policy (Edit) form opens with the General tab displayed. The Configuration Mode parameter in the Policy Configuration panel is in the Draft state. The Distribute button at the bottom of the form is dimmed.

**Note —** When the Configuration Mode parameter is in the Draft state, the Distribution button is dimmed and the policy cannot be distributed to the NEs. You must first release the policy for distribution. Releasing the global policy also distributes the policy to existing local definitions.

6 Release the policy and distribute it to as many routers as required. See the *5620 SAM User Guide* for information about how to distribute a policy.

7 Close the Diameter Profile, Global Policy (Edit) form.

## Procedure 14-6 To view a diameter profile

1 Choose Policies→Mobile→LTE Profiles and Policies. The Manage LTE Profiles form opens.

2 Choose Diameter Profile (LTE) from the Select Object Type drop-down menu.

3 Specify a filter to search for a policy, choose a policy in the filtered list, and click on the Properties button. The Diameter Profile—Global Policy (Edit) form opens.

4 Click on the following tab buttons in the Diameter Profile—Global Policy (Edit) form to view the properties of the profile, and the associated NEs, entities, and faults.

- General—to view the general properties of the diameter profile, such as the parameters configured in Procedure 14-5.
- Local Definitions—to view the NEs to which the policy has been distributed.
- Diameter Peer Profiles—to view the properties of the diameter peers that use this policy. See Procedure 14-7 for information about how to configure the diameter peer profiles.
- Signaling—to view the properties of the signaling interfaces that use this policy. See Procedure 6-1 for information about how to configure diameter signaling on the SGW; see Procedure 6-9 for information about how to configure diameter signaling on the PGW.
- Faults—to identify faults and to navigate to alarm information.

5 Close the Diameter Profile, Global Policy (Edit) form.

## Procedure 14-7 To configure a diameter peer profile

You must create a diameter profile, as described in Procedure 14-5, before you can configure a diameter peer profile.

**Note 1 —** Before you can configure the Destination Realm, Load Balance Enable, and interface parameters, you must set the administrative state for existing peers to down.

**Note 2 —** To delete a peer entry, the peer must be shut down. To delete the global or local policy, the peer must be shut down.

The number of peers that you can configure depends on the value that you set for the Application Type parameter. When the application type is set to Gx, you can only configure one peer. When the application type is set to Rf, you can configure up to 20 peers.

1 Choose Policies→Mobile→LTE Profiles and Policies. The LTE Profiles form opens.

2 Choose Diameter Peer Profile (LTE) from the Select Object Type drop-down menu.

3 Perform one of the following:

a Specify a filter to search for and modify an existing profile. Choose a profile in the list and click on the Properties button.

b Click on the Create button. The Diameter Peer Profile, Global Policy (Create) form opens with the General tab displayed.

**4** Configure the parameters:

- Displayed Name
- Description
- Destination Realm
- Load Balance Enabled
- Application Type

**5** In the Diameter Peer Configuration panel, click on the Select button to display a list of diameter profiles to associate with the peer. The Select Diameter Profile — Diameter Peer Profile — Global Policy form opens.

**6** Perform one of the following:

**a** Configure a filter to search for an existing policy, choose a policy, and click on the OK button. You can also click on the Properties button to modify the policy, if required.

**b** Click on the Create button. The Diameter Profile, Global Policy (Create) form opens with the General tab displayed. See Procedure 14-5 for information about how to configure the diameter profile.

**7** Configure the parameters:

- Destination Realm
- Transport Protocol
- Load Balance Enabled
- Application Type

**8** Click on the Apply button.

**9** Click on the Diameter Peer IP Addresses tab button.

**10** Click on the Create button to configure an IP address for the diameter peer. The Diameter Peer List Entry, Global Policy (Create) form opens.

**11** Configure the parameters:

- Peer IP Address/URL
- Peer Port
- Peer Administrative State

**12** Click on the OK button to save the policy. A dialog box opens.

**13** Click on the Yes button.

**14** Click on the Apply button. The Diameter Peer Profile, Global Policy (Edit) form opens with the General tab displayed. The Configuration Mode parameter in the Policy Configuration panel is in the Draft state. The Distribute button at the bottom of the form is dimmed.

**Note —** When the Configuration Mode parameter is in the Draft state, the Distribution button is dimmed and the policy cannot be distributed to the NEs. You must first release the policy for distribution. When you release a global policy, the policy is distributed to existing local definitions.

**15** Release the policy and distribute it to as many routers as necessary. See the *5620 SAM User Guide* for information about how to distribute a policy.

**16** Close the Diameter Peer Profile, Global Policy (Edit) form.

## Procedure 14-8 To view a diameter peer profile

**1** Choose Policies→Mobile→LTE Profiles and Policies. The LTE Profiles form opens.

**2** Choose Diameter Peer Profile (LTE) from the Select Object Type drop-down menu.

**3** Specify a filter to search for a policy, choose a policy in the filtered list, and click on the Properties button. The Diameter Peer Profile—Global Policy (Edit) form opens.

**4** Click on the following tab buttons in the Diameter Peer Profile—Global Policy (Edit) form to view the properties of the profile, and the associated NEs, reference points, and faults.

- General—to view the general properties of the diameter peer profile, such as the parameters configured in Procedure 14-7.
- Diameter Peer IP Addresses—to view the peer IP address properties
- Local Definitions—to view the NEs to which the policy has been distributed.
- Gx and Rf—to view the properties of the reference points that use this policy. See Procedure 6-2 for information about how to configure the Rf reference point on the SGW; see Procedure 6-10 for information about how to configure the Rf and Gx reference points on the PGW.
- PDN APN—to view the properties of the PDN APNs that use this profile
- SGW Charging Profile—to view the properties of SGW charging profiles
- Faults—to identify faults and to navigate to alarm information.

**5** Close the Diameter Peer Profile, Global Policy (Edit) form.

## Procedure 14-9 To configure a QCI policy

1 Choose Policies→Mobile→LTE Profiles and Policies from the 5620 SAM main menu. The LTE Profiles form opens.

2 Choose QCI Policy (LTE) from the Select Object Type drop-down menu.

3 Perform one of the following:

   a Specify a filter to search for and modify an existing policy. Use the filters to search for and open an existing policy by choosing a policy in the filtered list and clicking on the Properties button.

   b Click on the Create button. The QCI Policy, Global Policy (Create) form opens with the General tab displayed.

4 Configure the parameters:

   - Displayed Name
   - Description

5 Click on the Apply button. The QCI Policy, Global Policy (Create) form closes, the new policy appears in the list of QCI policies on LTE Profiles form, and the QCI Policy, Global Policy (Edit) form opens with the General tab displayed.

6 Click on the QCI Policy Entries tab button in the QCI Policy, Global Policy (Edit) form. A list of policy entries is displayed in the form.

   i Choose one of the entries in the list and click on the Properties button. The QCI Policy Entry, QCI Policy, Global Policy (Edit) form opens with the General tab displayed.

   ii Modify the parameters, if required:

      - Displayed Name
      - Description
      - DSCP Preserve
      - DSCP for In Profile Packets
      - DSCP for Out Profile Packets
      - Forwarding Class Name
      - Profile

   iii Click on the OK button. The form closes and the policy information appears in the QCI Policy Entries tab.

   iv Click on the OK button to save the changes to the QCI Policy Entry. A dialog box appears.

   v Click on the Yes button. The QCI Policy Entries tab closes and the QCI Policy, Global Policy (Edit) form closes.

7 Click on the Apply button. The Diameter Profile, Global Policy (Edit) form opens with the General tab displayed. The Configuration Mode parameter in the Policy Configuration panel is in the Draft state. The Distribute button at the bottom of the form is dimmed.

**Note —** When the Configuration Mode parameter is in the Draft state, the Distribution button is dimmed and the policy cannot be distributed to the NEs. You must first release the policy for distribution. Releasing the global policy also distributes the policy to existing local definitions.

8 Release the policy and distribute it to as many routers as necessary. See the *5620 SAM User Guide* for information about how to distribute a policy.

## Procedure 14-10 To change a QCI entry

1 Choose Policies→Mobile→LTE Profiles and Policies from the 5620 SAM main menu. The LTE Profiles form opens.

2 Choose QCI Policy (LTE) from the Select Object Type drop-down menu.

3 Specify a filter to search for and modify an existing policy. Use the filters to search for and open an existing policy by choosing a policy in the filtered list and clicking on the Properties button.

4 Click on the QCI Policy Entries tab button in the QCI Policy, Global Policy (Edit) form. The list of policy entries are displayed in the form.

5 Choose one of the entries in the list and click on the Properties button. The QCI Policy Entry, QCI Policy, Global Policy (Edit) form opens with the General tab displayed.

6 Modify the following parameters, as required:

- Displayed Name
- Description
- DSCP Preserve
- DSCP for In Profile Packets
- DSCP for Out Profile Packets
- Forwarding Class Name
- Profile

7 Click on the OK button. The form closes and the policy information appears in the list in the QCI Policy Entries tab.

8 Click on the OK button to save the changes to the QCI Policy Entry. A dialog box appears.

9 Click on the Yes button. The QCI Policy Entries tab closes.

10 Close the QCI Policy, Global Policy (Edit) form.

## Procedure 14-11 To view a QCI policy

1 Choose Policies→Mobile→LTE Profiles and Policies from the 5620 SAM main menu. The LTE Profiles form opens.

2 Choose QCI Policy (LTE) from the Select Object Type drop-down menu.

3 Specify a filter to search for a policy, choose a policy in the filtered list, and click on the Properties button. The QCI Policy—Global Policy (Edit) form opens.

4 Click on the following tab buttons in the QCI Policy—Global Policy (Edit) form to view the properties of the profile, and the associated NEs, entities, and faults.

- General—to view the general properties of the QCI policy, such as the parameters configured in Procedure 14-9.
- QCI Policy Entries—to view QCI policy entry properties
- Local Definitions—to view the NEs to which the policy has been distributed.
- EPC Gateway—to view the properties of the SGW and PGW that use this policy. See Procedure 6-5 for information about how to change the QCI policy on the SGW; see Procedure 6-14 for information about how to change the QCI policy on the PGW.
- Gateway APN—to view the properties of the APNs that use this policy. See Procedure 6-3 for information about how to configure an APN on the SGW.
- Faults—to identify faults and to navigate to alarm information.

5 Close the QCI Policy, Global Policy (Edit) form.

## Procedure 14-12 To configure a PGW charging profile

1 Choose Policies→Mobile→LTE Profiles and Policies from the 5620 SAM main menu. The LTE Profiles form opens.

2 Choose PGW Charging Profile (LTE) from the Select Object Type drop-down menu.

3 Perform one of the following:

a Specify a filter to search for an existing policy. Choose the policy to modify and click on the Properties button.

b Click on the Create button. The PGW Charging Profile, Global Policy (Create) form opens with the General tab displayed.

4 Configure the parameters:

- Charging Profile ID
- Description
- Offline Charging
- Time Limit (s)
- Volume Limit (koctets)

5 Click on the Apply button. The PGW Charging Profile, Global Policy (edit) form opens with the General tab displayed. The Configuration Mode parameter in the Policy Configuration panel is set to Draft. The Distribute button at the bottom of the form is dimmed and the profile cannot be distributed to the NEs. You must first release the profile for distribution. Releasing the global policy also distributes the policy to existing local definitions.

6 Release the profile and distribute the profile to as many routers as required. See the *5620 SAM User Guide* for more information.

7 Close the PGW Charging Profile, Global Policy (Edit) form.

8 Close the LTE Profiles form.

## Procedure 14-13 To view a PGW charging profile

1 Choose Policies→Mobile→LTE Profiles and Policies from the 5620 SAM main menu. The LTE Profiles form opens.

2 Choose PGW Charging Profile (LTE) from the Select Object Type drop-down menu.

3 Specify a filter to search for a policy, choose a profile from the list, and click on the Properties button. The PGW Charging Profile, Global Policy (Edit) form opens.

4 Click on the following tab buttons in the PGW Charging Profile, Global Policy (Edit) form to view the properties of the profile, and the associated NEs, entities and faults.

- General—to view the general properties of the PGW charging profile, such as the parameters configured in Procedure 14-12
- Local Definitions—to view the NEs to which the policy is distributed
- PDN Gateway—to view the PDN gateways that use the profile
- PDN APN—to view the PDN APNs that use the profile
- Faults—to identify faults and navigate to alarm information

5 Close the PGW Charging Profile, Global Policy (Edit) form.

## Procedure 14-14 To configure an SGW charging profile

1 Choose Policies→Mobile→LTE Profiles and Policies from the 5620 SAM main menu. The LTE Profiles form opens.

2 Choose SGW Charging Profile (LTE) from the Select Object Type drop-down menu.

**3** Perform one of the following:

**a** Specify a filter to search for an existing policy. Choose the policy to modify and click on the Properties button.

**b** Click on the Create button. The SGW Charging Profile, Global Policy (Create) form opens.

**4** Configure the parameters:

- Charging Profile ID
- Description
- Offline Charging

**5** Click on the Select button for the Primary Diameter Peer profile in the Charging Data Function panel to choose a primary diameter peer profile. The Select Primary Diameter Peer - SGW Charging Profile - Global Policy form opens.

**6** Choose a profile from the displayed list and click on the OK button. The Select Primary Diameter Peer - SGW Charging Profile - Global Policy form closes.

**7** Click on the Select button for the Secondary Diameter Peer profile in the Charging Data Function panel to choose a secondary diameter peer profile. The Select Secondary Diameter Peer - SGW Charging Profile - Global Policy form opens.

**8** Choose a profile from the displayed list and click on the OK button. The Select Secondary Diameter Peer - SGW Charging Profile - Global Policy form closes.

**9** Configure the parameters:

- QoS Change
- User Location Change
- Time Limit (s)
- Volume Limit (Kbytes)
- Maximum Number of Changes
- MS Time Zone Change

**10** Click on the Apply button. The SGW Charging Profile, Global Policy (Edit) form opens with the General tab displayed. The Configuration Mode parameter in the Policy Configuration panel is set to Draft. The Distribute button at the bottom of the form is dimmed and the profile cannot be distributed to the NEs. You must first release the profile for distribution. Releasing the global policy also distributes the policy to existing local definitions.

**11** Release the profile and distribute the profile to as many routers as required. See the *5620 SAM User Guide* for more information.

**12** Close the SGW Charging Profile, Global Policy (Edit) form.

## Procedure 14-15 To view an SGW charging profile

1 Choose Policies→Mobile→LTE Profiles and Policies from the 5620 SAM main menu. The LTE Profiles form opens.

2 Choose SGW Charging Profile (LTE) from the Select Object Type drop-down menu.

3 Specify a filter to search for a policy, choose a profile from the list, and click on the Properties button. The SGW Charging Profile—Global Policy (Edit) form opens.

4 Click on the following tab buttons in the SGW Charging Profile—Global Policy (Edit) form to view the properties of the profile, and the associated NEs, entities and faults.

- General—to view the general properties of the QCI policy, such as the parameters configured in Procedure 14-14
- Local Definitions—to view the NEs to which the policy has been distributed
- Serving Gateway—to view the properties of the SGWs that use this policy
- Faults—to identify faults and navigate to alarm information

5 Close the SGW Charging Profile, Global Policy (Edit) form.

## Procedure 14-16 To configure a PLMN list group

1 Choose Policies→Mobile→LTE Profiles and Policies from the 5620 SAM main menu. The LTE Profiles form opens.

2 Choose PLMN List Group (LTE) from the Select Object Type drop-down menu.

3 Perform one of the following:

a Specify a filter to search for an existing policy. Choose the policy to modify and click on the Properties button.

b Click on the Create button. The PLMN List Group, Global Policy (Create) form opens with the General tab displayed.

4 Configure the Displayed Name parameter.

5 Click on the PLMN List Policy tab button.

6 Click on the Create button.

7 The PLMN List Profile (Create) form opens.

8 Configure the parameters:

- Description
- Mobile Country Code
- Mobile Network Code

9 Click on the Apply button. A dialog box opens.

10 Click on the OK button to add the PLMN list to the group.

11 Repeat steps 8 to 10 for each PLMN list that you need to add to the group.

12 Click on the OK button to close the PLMN List Profile (Create) form.

13 Click on the Apply button. The PLMN List Group, Global Policy (Edit) form opens with the General tab displayed. The Configuration Mode parameter in the Policy Configuration panel is set to Draft. The Distribute button at the bottom of the form is dimmed and the profile cannot be distributed to the NEs. You must first release the profile for distribution. Releasing the global policy also distributes the policy to existing local definitions.

14 Release the profile and distribute the profile to as many routers as required. See the *5620 SAM User Guide* for more information.

15 Close the LTE Profiles form.

## Procedure 14-17 To view a PLMN list group

1 Choose Policies→Mobile→LTE Profiles and Policies from the 5620 SAM main menu. The LTE Profiles form opens.

2 Choose PLMN List Group (LTE) from the Select Object Type drop-down menu.

3 Specify a filter to search for a policy, choose a profile from the list, and click on the Properties button. The PLMN List Group, Global Policy (Edit) form opens.

4 Click on the following tab buttons in the PLMN List Group, Global Policy (Edit) form to view the properties of the profile, and the associated NEs, entities and faults.

- General—to view the general properties of the policy, such as the parameters configured in Procedure 14-16
- PLMN List Policy—to view PLMN list policies in the group
- Local Definitions—to view the NEs to which the policy is distributed
- EPC Gateway—to view the EPC gateways that use the profile
- Faults—to identify faults and navigate to alarm information

5 Close the PLMN List Group, Global Policy (Edit) form.

## Procedure 14-18 To configure an LTE LI delivery function peer policy

1 Choose Policies→Mobile→LTE Profiles and Policies from the 5620 SAM main menu. The LTE Profiles form opens.

2 Choose LTE LI Delivery Function Peer (LTE LI) from the Select Object Type drop-down menu.

3 Perform one of the following:

   a Specify a filter to search for a policy, choose the policy to modify, and click on the Properties button.

   b Click on the Create button. The LTE LI Delivery Function Peer — Global Policy (Create) form opens.

4 Configure the parameters:

- ID
- Description
- Address (Delivery Function 2 panel)
- Port (Delivery Function 2 panel)
- Address (Delivery Function 3 panel)
- Port (Delivery Function 3 panel)

5 Click on the OK button to save the configuration.

6 Click on the Apply button. The LTE LI Delivery Function Peer — Global Policy (Edit) form opens with the General tab displayed. The Configuration Mode parameter in the Policy Configuration panel is set to Draft. When you release the global policy, the policy is also distributed to existing local definitions.

7 Release the profile and distribute the profile to as many routers as required. See the *5620 SAM User Guide* for more information.

8 Close the LTE LI Delivery Function Peer — Global Policy (Create) form.

## Procedure 14-19 To configure an LTE LI interception target policy

1 Choose Policies→Mobile→LTE Profiles and Policies from the 5620 SAM main menu. The LTE Profiles form opens.

2 Choose LTE LI Interception Target (LTE LI) from the Select Object Type drop-down menu.

3 Perform one of the following:

   a Specify a filter to search for a policy, choose the policy to modify, and click on the Properties button.

   b Click on the Create button. The LTE LI Interception Target — Global Policy (Create) form opens.

4 Configure the parameters:

- Description
- Target ID
- Target Type
- Content Type

5 Click on the Select button to choose a delivery function peer. The Select Delivery Function Peer — LTE LI Interception Target — Global Policy form opens.

6 Choose a profile from the list and click on the OK button. The Select Delivery Function Peer — LTE LI Interception Target — Global Policy form closes.

7 Click on the Apply button. The LTE LI Interception Target — Global Policy (Edit) form opens with the General tab displayed. The Configuration Mode parameter in the Policy Configuration panel is set to Draft. When you release the global policy, the policy is also distributed to existing local definitions.

8 Release the profile and distribute the profile to as many routers as required. See the *5620 SAM User Guide* for more information.

9 Close the LTE LI Interception Target — Global Policy (Create) form.

# *LTE ePC NE maintenance*

**15 — Maintaining LTE ePC NEs**

# 15 — Maintaining LTE ePC NEs


**15.1 LTE ePC NE maintenance overview** *15-2*

**15.2 Workflow for LTE ePC NE maintenance** *15-5*

**15.3 NE maintenance procedures** *15-6*

## 15.1 LTE ePC NE maintenance overview

The 5620 SAM includes NE maintenance functionality for supported LTE devices that allows a system administrator to:

- define the 5620 SAM deployment and local device configuration-save conditions
- perform an on-demand or a scheduled NE configuration backup
- restore a previous device configuration
- perform an on-demand or a scheduled NE software upgrade; scheduled software upgrades are supported on the 7750 MGs.
- view the status of a deployment, backup, device configuration restore, device software upgrade, or an accounting statistics retrieval operation in progress
- troubleshoot a failed deployment, backup, or upgrade

A 5620 SAM operator with an administrator or network element software management scope of command role can perform device configuration save, backup, or restore operations, and can create policies to schedule backups and save a configuration.

A 5620 SAM operator can upgrade software or schedule a software upgrade on NEs that are within their span of control.

**Note —** The 5620 SAM backup and restore, software upgrade, and file browsing functions are not supported on the 5780 DSC.

### Managing LTE ePC NE deployments

When you apply a device configuration change using the 5620 SAM (for example, by clicking on the OK or Apply button after you change a service parameter), the 5620 SAM deploys the configuration change to the device according to the 5620 SAM deployment policy. The deployment policy also specifies when the device saves the configuration locally. The information in a deployment policy includes the following:

- number and frequency of deployment retries that the 5620 SAM performs
- conditions under which the 5620 SAM initiates a device configuration save, such as the frequency and level of saved configuration detail

In a lab or testing environment, you may need to disable the 5620 SAM deployment. See the *5620 SAM-O OSS Interface Developer Guide* for information about how to disable a 5620 SAM deployment.

### Managing LTE ePC NE backups and restores

A 5620 SAM backup policy specifies the conditions under which the 5620 SAM performs a device backup to ensure that the device configuration is not lost in the event of a failure. A default policy is assigned to all managed devices after the 5620 SAM installation.

You can create and configure multiple backup policies, and you can assign policies to multiple NEs. You cannot delete a backup policy that is assigned to an NE. The information in a backup policy includes the following:

- frequency of backups
- files that a backup collects
- type of file compression that the 5620 SAM uses
- age and number of backup files that the 5620 SAM retains

The 5620 SAM stores the backed up device configuration files in the 5620 SAM database to facilitate tracking and retrieval. You can perform an on-demand export of backup files from the database to a file system. You can import NE backups from a file system to the 5620 SAM database. If required, you can configure a 5620 SAM server to automatically save each device backup to a file system when it stores the backup in the database.

If a device configuration requires replacement (for example, because the device becomes corrupted), you can restore a previously backed up configuration. Unless otherwise specified, the 5620 SAM restores the most recent device configuration backup.

## Managing LTE ePC NE software upgrades

When a new device software version is available, you can use the 5620 SAM to perform an on-demand NE software upgrade or schedule an upgrade using a software upgrade policy. You can create and configure multiple software upgrade policies and assign the policies to multiple NEs. You cannot delete a software upgrade policy that is assigned to an NE. The information in a software upgrade policy includes the following:

- NE file location of the currently active device software
- NE file location in which to store a backup copy of the current device software
- whether to activate the software after the software is transferred to the NE
- whether to reinitialize the NE after the upgrade
- whether the upgrade is an ISSU

**Note 1 —** Software upgrades between a 7750 SR and a 7750 MG NE are not supported.

**Note 2 —** Software upgrades in an SR-MG 1.0 (1.0.B1-x) loadset are supported. Software upgrades from SR-MG 1.0 B1 to 1.0 B2 are supported.

**Note 3 —** You can use the 5620 SAM to transfer a software image to the 9471 MME, but you cannot perform the software upgrade by using the 5620 SAM. See the *Alcatel-Lucent 9471 Mobility Management Entity (MME) | Release LMx.x Software Update 418-111-206* document for more information about performing a software upgrade on the 9471 MME.

During a software upgrade, the 5620 SAM performs checks to ensure that the new software is compatible with the device type and that the required files are present. The 5620 SAM does not initiate a device software upgrade unless the required conditions are met. You can use the 5620 SAM to roll back a software upgrade to the previous version if the upgrade fails.

#### ISSUs

The ISSU process ensures that service is uninterrupted during the upgrade of a device. A device software upgrade requires a CPM restart, which causes temporary device down time. When a device has dual CPMs, one CPM remains active and in service; the other CPM restarts with the upgraded software. If an upgrade on a CPM fails, the CPM reports a failed state and raises an alarm. The ISSUs for devices are restricted to maintenance software releases.

You can configure the 5620 SAM to activate the new software immediately after the software is transferred to an NE. You can configure the 5620 SAM to transfer the software file but not to activate the software; in this case, a manual software activation is required. Manual software activation provides more control over an upgrade, which may be required; for example, when multiple NEs are involved.

## LTE ePC NE file-system browsing

A 5620 SAM operator can browse the file system of a managed NE to list the contents of the compact flash devices. You can browse files for the 7750 MG using FTP or a CLI session using SSH. FTP file browsing on an NE requires FTP user-account access on the NE. SSH file browsing requires console user account access and the configuration of SSH security on the NE.

You can use the 5620 SAM GUI to browse the different types of files. When you browse an NE file system using the 5620 SAM, you can confirm that operations, such as the following, occur as planned by verifying the size and timestamp of the local NE files.

- configuration saves
- software image transfers and upgrades
- configuration restores
- accounting-statistics collection

## Secure file transfers for site backups and upgrades

The 5620 SAM supports both secure and non-secure file transfers in backups, restores, and software upgrades. Secure file transfers using SSH2 are supported by the 7750 MG. The device mediation policy determines whether FTP or SCP is used during file transfers.

## 15.2 Workflow for LTE ePC NE maintenance

1. For secure backups and upgrades, verify that SSH2 is correctly configured on the device and that the 5620 SAM mediation policy for the device is configured for secure FTP or SCP. Secure backups and upgrades are supported on the 7750 MG.
2. Configure the device for discovery by the 5620 SAM using a CLI.
3. Configure the 5620 SAM deployment policy to specify how and when the 5620 SAM tries to send configuration changes from 5620 SAM clients to the managed devices.
4. Use the 5620 SAM to configure device backup policies. A device backup policy specifies how often the 5620 SAM backs up the device configuration.
5. Perform on-demand NE configuration saves, backups, and restores, as required.
6. Use the 5620 SAM to transfer software image files to the 9471 MME, as required.
7. Perform 7750 MG software upgrades, as required.
   - **i** Create a software upgrade policy for the 7750 MG.
   - **ii** Upload the device software image to the 5620 SAM server.
   - **iii** Verify that the device boot environment is synchronized.
   - **iv** Perform a backup on the device prior to activating the software image.
   - **v** Perform the software upgrade operation to transfer the software image to the device and activate the image.
   - **vi** Perform a backup on the device after activating the software image and before rebooting the device.
   - **vii** Reboot the device.
   - **viii** Resynchronize the device with the 5620 SAM, if required.
   - **ix** Verify the success of the software upgrade.

**Note —** The 5620 SAM does not currently support rollback or restore of a software upgrade by using the 5620 SAM GUI. Contact Alcatel-Lucent for more information about troubleshooting failed 7750 MG software upgrades.

8. Schedule device software upgrades, as required. Scheduled software upgrades are supported on the 7750 MG.
   - **i** Create a 5620 SAM schedule.
   - **ii** Create a software upgrade policy.
   - **iii** Create a 5620 SAM scheduled task for the upgrade activity.
   - **iv** Review the results and status of the scheduled upgrade and take the appropriate actions, as required, based on your company policies.

9 View the status of configuration deployments, backups, restores, or upgrades using the appropriate management form and viewing the contents of NE file systems by opening an FTP or SSH file browser from the 5620 SAM client GUI.

10 Troubleshoot any failed configuration deployments, as required, using the 5620 SAM alarm window and the Deployment form.

## 15.3 NE maintenance procedures

Use the following procedures to perform NE maintenance operations. See the *5620 SAM Parameter Guide* for more information about the parameters described in the following procedures.

### Backup and restore procedures

The following procedures describe backup and restore tasks for LTE ePC devices.

#### Procedure 15-1 To create a device backup policy

When the 5620 SAM performs a device configuration backup, it transfers files to itself from the device.

**Note —** The default backup policy is assigned automatically to all 5620 SAM-managed NEs that do not currently have an assigned backup policy.

1 Choose Administration→NE Maintenance→Backup/Restore from the 5620 SAM main menu. The Backup/Restore form opens with the Backup/Restore Policy tab displayed.

2 Click on the Create button. The Backup Policy (Create) form opens.

3 Specify whether backup functionality is enabled.

   a Enable the Enable Backup parameter.

   b Disable the Enable Backup parameter. The remaining parameters on the form cannot be configured. Go to step 9.

4 Configure the following parameters:

- Policy ID
- Auto-Assign ID
- Name
- Policy Type

5 Specify whether to perform a reboot after the configuration is restored to the device by specifying the Auto Reboot After Successful Restore parameter.

**Caution —** When you use the 5620 SAM client GUI to restore a managed device configuration and you disable the Auto Reboot After Successful Restore parameter, there is a risk that the bof.cfg file may be overwritten in the following situations:

- when a user performs “bof save” using CLI on the managed device
- If there is a gap between a restore and a reboot, perform a “show bof” to ensure that another user has not performed a “bof save”.

6 You can schedule backups based on a time interval or on the number of NE configurations performed from the 5620 SAM server. Configure the backup triggering parameters:

- Scheduled Backup Scheme
- Scheduled Backup Interval
- Scheduled Backup Sync Time
- Scheduled Backup Threshold (operations)
- Auto Backup Scheme
- Auto Backup Threshold (operations)

7 Configure the Backup Settings parameters:

- CLI Config File Mode
- CLI Config Save Details
- CLI Debug Save Config File
- Boot Option File Mode
- File Compression

**Note —** In addition to enabling the CLI Debug Save Config File Mode parameter, you must specify the location of the debug configuration files in the 5620 SAM main server configuration. See the *5620 SAM User Guide* for information about how to specify the location of the debug configuration files in the main server configuration.

8 Configure the parameters in the Backup Purging panel. Backup purging parameters allow you to specify the number of backup files kept. These settings allow you to eliminate manual monitoring and deletion of backup files. The purge criteria can be the number of files, the age of the files, or both.

- Auto-Purge Scheme
- Number of Backups
- Maximum Backup Age (days)

9 Click on the OK button to save the backup policy. The Backup Policy (Create) form closes.

**10** Assign the policy to NEs as required.

- **i** Select the new policy in the list and click on the Properties button. The Backup Policy (Edit) form opens.
- **ii** Click on the Backup/Restore Policy Assignment tab button.
- **iii** Select one or more NEs in the Unassigned Sites list and click on the right-pointing arrow to move them to the Assigned Sites list.
- **iv** Click on the OK button. The Backup Policy (Edit) form closes and a dialog box appears.
- **v** Click on the Yes button. The policy is assigned to the NEs.

**11** Close the Backup/Restore form.

## Procedure 15-2 To perform an immediate device backup, restore, or configuration save

When you start an immediate backup, you back up the device configuration based on the backup policy associated with the NE.

A device configuration restore operation uses the most recently backed-up device configuration file unless otherwise specified. See Procedure 15-5 for more information.

The following conditions must be present before you can perform a device configuration backup, restore, or configuration save:

- You have a 5620 SAM user account with an administrator or network element software management scope of command role or a scope of command role with write access to the mediation package. See the *5620 SAM User Guide* for more information about scope of command roles.
- FTP or secure FTP is configured in the mediation policy for the NE. See chapter 4 for more information.
- The BOF persist parameter is set on the device. See chapter 4 for information about device commissioning.

Depending on the operation type, the Backup State or Restore State column displays the current state of the operation. The possible values are:

- Not Attempted - the operation is unattempted
- Saving Config - the device configuration is being saved on the device
- Transferring Files - a file transfer is in progress
- Success - the operation is complete and successful
- Failure - the operation is complete but unsuccessful
- CPM Sync and Pending Reboot - the device configuration is restored and the device is synchronizing the CPMs before it reboots

- CPM Sync and Pending Reboot Standby - the 5620 SAM is waiting for the reboot of the standby CPM
- Standby Reboot and Pending Redundant Switch-over - the 5620 SAM is waiting for the switchover to the standby CPM

**Note —** During a backup, if a device is unresponsive to the 5620 SAM because SNMP on the device is disabled, the Backup State column entry for the device does not immediately display the correct value of Failed. This latency is caused by the inability of the 5620 SAM to communicate with the unresponsive device. In such a situation, the Backup State column displays the initial value of Saving Config until three 10-minute SNMP polling periods, or 30 minutes, have elapsed, after which the Backup State changes to Failed if SNMP remains disabled.

1. Choose Administration→NE Maintenance→Backup/Restore from the 5620 SAM main menu. The Backup/Restore form opens.
2. Click on the Backup/Restore Status tab button. The managed devices are listed.
3. Select a device from the list and click on the Backup button, the Restore button, or the Save Config button, depending on the operation that you want to perform. A dialog box appears.
4. Click on the Yes button. The backup or restore operation starts, and the current backup or restore state for the device is indicated in the Backup State or Restore State column.
5. You can resynchronize an NE with the 5620 SAM database, if required, by clicking on the Resync button.
6. Close the Backup/Restore form.

## Procedure 15-3 To import a device backup to the 5620 SAM database

1. Choose Administration→NE Maintenance→Backup/Restore from the 5620 SAM main menu. The Backup/Restore form opens with the Backup/Restore Policy tab displayed.
2. Click on the Backup/Restore Status tab button.
3. Select the NE in the list for which you are importing a backup and click on the Properties button. The NE Backup/Restore Status form opens.
4. Click on the Import button. A file navigator form opens.
5. Use the form to specify the directory that contains the device backup and click on the OK button.

   If the directory contains a backup for this NE, the 5620 SAM imports the backup files into the 5620 SAM database and the import is successful. Otherwise, a dialog box appears if the directory does not contain a backup from this NE, and the import fails. Click on the OK button to close the dialog box.

6 Close the NE Backup/Restore Status form.

7 Close the Backup/Restore form.

## Procedure 15-4 To export a device backup to a file

1 Choose Administration→NE Maintenance→Backup/Restore from the 5620 SAM main menu. The Backup/Restore form opens with the Backup/Restore Policy tab displayed.

2 Click on the Backup/Restore Status tab button.

3 Select the NE in the list for which you are exporting a backup and click on the Properties button. The NE Backup/Restore Status form opens.

4 Click on the Backups tab button. A list of backups for the NE is displayed.

5 Select a backup in the list and click on the Export button. A file navigator form opens.

6 Use the form to specify the directory that is to contain the exported device backup and click on the OK button. The NE configuration backup is saved to the specified directory.

7 Close the NE Backup/Restore Status form.

8 Close the Backup/Restore form.

## Procedure 15-5 To restore a device configuration backup other than the most recent

You can choose to restore an older version of the device configuration to meet special network requirements.

**Caution 1 —** Older backups do not have the most recent network information. Restoring an older device configuration may be service-affecting.

**Caution 2 —** Ensure that you back up the current device configuration by performing Procedure 15-2 before you proceed.

1 Choose Administration→NE Maintenance→Backup/Restore from the 5620 SAM menu. The Backup/Restore form opens.

2 Click on the Backup/Restore Status tab. The managed devices are listed.

3 Double-click on a device from the list. The NE Backup/Restore Status form for the selected device opens.

4 Click on the Backups tab button. A list of configuration backups for the selected device opens, ordered from the oldest to the most recent.

5 Select a backup in the list and click on the Restore button. A dialog box appears.

6 Click on the Yes button.

7 Click on the Resync button to ensure the latest network information is available, if required.

8 Close the Backup/Restore form.

## Software upgrade procedures

The following procedures describe software upgrade tasks for LTE ePC devices.

### Procedure 15-6 To import device software image or description files to the 5620 SAM database

Perform this procedure to import a set of device software files into the 5620 SAM database for use during device software upgrades.

1 Make the new device software files available to the 5620 SAM.

   i If the device software files are compressed in an archive, for example, a TiMOS ZIP file, extract the files from the archive.

   **Note —** Depending on the device type and version, the compressed files in a device software archive do not extract to a flat directory structure.

   ii Copy or move the files to a directory on the 5620 SAM client PC or another location that is accessible to the 5620 SAM.

   **Note —** The directory must contain a valid and complete set of device software files, and must not contain other files or subdirectories.

2 Choose Administration→NE Maintenance→Software Upgrade from the 5620 SAM main menu. The Software Upgrade form opens with the Software Upgrade Policy tab displayed.

3 Click on the Software Images tab button.

4 Click on the appropriate tab button for the type of NE that you need to upgrade.

5 Click on the Import button. The Open window appears.

6 Navigate to folder that contains the software image, choose the software image, and click on the Open button. The software image appears in the list.

The 5620 SAM verifies that only the required files are present and then imports the files from the specified directory into the 5620 SAM database. An entry for the image appears in the list.

If the directory does not contain only the required files, a dialog box appears. Go to step 7. Otherwise, go to step 8.

**7** Perform the following:

**i** Click on the OK button.

**ii** Copy or move files, as required, to ensure that the directory contains only the files required for the upgrade.

**iii** Go to step 5.

**8** Close the Software Upgrade form.

## Procedure 15-7 To assign a 9471 MME software upgrade policy

The 5620 SAM uses a 9471 MME-specific software upgrade policy to download 9471 MME software. A default 9471 MME software upgrade policy is created when the 5620 SAM initializes.

**Note —** Although you can download 9471 MME software to one or more 9471 MME NEs, you cannot perform an upgrade using the 5620 SAM. See the *Alcatel-Lucent 9471 Mobility Management Entity (MME) | Release LMx.x Software Update 418-111-206* document for more information about performing a software upgrade on the 9471 MME.

**1** Refer to the "NE maintenance" chapter of the *5620 SAM User Guide* for information on how to import the required 9471 MME software image.

**2** Ensure that the following conditions are present.

- appropriate FTP accounts are configured and available on the 9471 MME.
- the 9471 MME configuration files are backed up, as described in the *5620 SAM User Guide*.

**3** Choose Administration→NE Maintenance→Software Upgrade from the 5620 SAM main menu. The Software Upgrade form opens.

**4** Click on the Create button. The Software Upgrade Policy (Create) form opens.

**5** Choose MME Node from the Policy Type drop-down menu.

**6** Configure the parameters:

- Auto-Assign ID
- Policy ID
- Name
- ATCA Image Root Path

**Note 1 —** You can open an FTP or SSH file browser from the form to determine the values to use for the ATCA Image Root Path parameter. Click on the FTP File Browser or SSH File Browser button, as required. See the *5620 SAM User Guide* for more information about viewing an NE file system by using an FTP or SSH file browser.

**Note 2 —** By default, /data0 is used to store image files.

**7** Click on the Apply button. The Software Upgrade Policy (Create) form refreshes with additional tab buttons and the form name changes to Software Upgrade Policy (Edit).

**8** Assign the policy to NEs, as required.

**i** Click on the Software Upgrade Policy Assignment tab button. The Software Upgrade Policy Filter (edit) form opens.

**ii** Configure the filter parameters, if required. Click on the OK button.

**iii** Choose one or more NEs in the Unassigned Sites list and click on the right arrow to move the NEs to the Assigned Sites list.

**iv** Click on the OK button. A dialog box appears.

**v** Click on the Yes button. The policy is assigned to the NEs.

**9** Close the Software Upgrade Policy (Edit) form. The new policy is displayed on the Software Upgrade form.

## Procedure 15-8 To perform a 9471 MME software image download

Perform the following procedure to download 9471 MME software to one or more 9471 MMEs.

The MME software images are stored in the 5620 SAM file system under install_dir/lte/backups, where install_dir is the database installation location, for example, /opt/5620sam/lte/backups. The software images are synchronized between the active and standby 5620 SAM server.

You need a 5620 SAM user account with an administrator or NE software management scope of command role, or a scope of command role with write access to the mediation package before you can perform a 9471 MME software download. See the *5620 SAM User Guide* for more information about scope of command roles.

1 Choose Administration→NE Maintenance→Software Upgrade from the 5620 SAM main menu. The Software Upgrade form opens.

2 Choose the appropriate software upgrade policy.

3 Click on the Software Images tab button.

4 Click on the 9471 MME Software Images tab button.

5 Choose a software image file in the list. The image descriptor file has a .Zip file extension and must be on the client system.

6 Click on the Upgrade Sites button. A list of NEs opens. The list is filtered to display only the device type that is appropriate for the selected software image.

7 Choose one or more NEs in the list.

8 Click on the OK button. The image transfer starts.

9 Click on the Software Upgrade Status tab button to view the status of the upgrade. Verify that the files are successfully transferred before you go to step 10.

10 Close the Software Upgrade form.

## Procedure 15-9 To assign a 7750 MG software upgrade policy

Perform this procedure to create and assign a software upgrade policy that can be used to perform an immediate or scheduled 7750 MG software image upgrade. Contact your Alcatel-Lucent technical support representative for information about downgrades.

1 Perform Procedure 15-6 to import the required device software image.

2 Ensure that the following conditions are present.

- Appropriate FTP accounts are configured and available on the devices.
- The device configuration files are backed up, as described in Procedures 15-1 and 15-2.

3 Choose Administration→NE Maintenance→Software Upgrade from the 5620 SAM main menu. The Software Upgrade form opens.

4 Click on the Create button. The Software Upgrade Policy (Create) form opens.

5 Configure the Policy Type parameter.

**6** Configure the following parameters:

- Auto-Assign ID
- Policy ID
- Name
- CFlash Image Root
- CFlash Backup Root Path

**Note 1 —** You can open an FTP or SSH file browser from this form to determine the values to use for the CFlash Image Root Path and CFlash Backup Root Path parameters. Click on the FTP File Browser or SSH File Browser button, as required. See the *5620 SAM User Guide* for more information about viewing NE file systems by using an FTP or SSH file browser.

**Note 2 —** By default, compact flash cf3 is used to store image and backup files. Ensure that you specify a supported compact flash for the NE type when you configure the CFlash Image Root Path and CFlash Backup Root Path parameters.

**7** Perform the following steps to configure the software upgrade parameters:

**Warning —** Alcatel-Lucent strongly recommends that you disable the Auto-Reboot After Successful Activation parameter for 7750 MG software upgrades.

**i** Enable the Auto-Activate After Successful File Transfer parameter.

**ii** Disable the Auto-Reboot After Successful Activation parameter.

**iii** Disable the In Service Software Upgrade parameter.

**Note —** An in-service software upgrade is supported only for a maintenance-release upgrade. For an upgrade to a new major release, you must perform an out-of-service upgrade.

Specifying an in-service software upgrade disables the Auto-Reboot After Successful Activation parameter.

**8** Click on the Apply button. The Software Upgrade Policy (Create) form refreshes with additional tab buttons and the form name changes to Software Upgrade Policy (Edit).

**9** Assign the policy to NEs as required.

**i** Click on the Software Upgrade Policy Assignment tab button. The Software Upgrade Policy Filter (edit) form opens.

**ii** Configure the filter parameters, if required. Click on the OK button.

**iii** Select one or more NEs in the Unassigned Sites list and click on the right-pointing arrow to move them to the Assigned Sites list.

**iv** Click on the OK button. A dialog box appears.

**v** Click on the Yes button. The policy is assigned to the NEs.

**10** Close the Software Upgrade Policy (Edit) form. The new policy is displayed on the Software Upgrade form.

## Procedure 15-10 To perform an immediate 7750 MG software upgrade

Perform this procedure to download a software image to one or more 7750 MG devices and activate the software image.

The following conditions must be true before you attempt a device software upgrade:

- You have a 5620 SAM user account with an administrator or network element software management scope of command role or a scope of command role with write access to the mediation package. See the *5620 SAM User Guide* for more information about scope of command roles.
- The FTP or secure FTP must be configured in the mediation policy for the NE. See chapter 4 for more information.
- The required software image is imported to the 5620 SAM. See Procedure 15-6 for more information.

**Warning —** The 7750 MG may require a firmware upgrade before a device software upgrade. To avoid a service outage, ensure that the device firmware version supports the software upgrade. See the device software Release Notes to obtain information about firmware and software version compatibility and about the firmware upgrade procedures.

**Caution 1 —** Alcatel-Lucent recommends that you establish a physical console session on the device that you need to upgrade. The console session allows you to monitor the upgrade and recover the device if the upgrade fails.

**Caution 2 —** Before you perform a software upgrade, read the device documentation. The software upgrade information in the device documentation takes precedence over this procedure.

**Caution 3 —** Before you perform an ISSU, review the appropriate device release notice for more information about the device software releases that support the ISSU. See section 15.1 for more information about the ISSU.

**Note —** If you downgrade a device software image, you must unmanage and delete the device before you perform the downgrade, as described in the *5620 SAM User Guide*. Contact your Alcatel-Lucent technical support representative for information about downgrades.

1. Perform a preliminary check before you start the software upgrade.
   - **a** Manually verify the software image file checksums.
   - **b** Verify that the device supports the new software.
   - **c** Verify that the compact flash drive has sufficient space for the software image files.
   - **d** For NEs with redundant CPMs, verify that the boot environments are synchronized by using the following CLI command:
     - **i** Open a console window on the NE.
     - **ii** Type the following command at the prompt:

       # **`show redundancy synchronization`**
     - **iii** Verify that the boot/config sync status is synchronized.
2. Backup the device configuration and verify that the backup is successful. See Procedure 15-2.
3. Import the software image into the 5620 SAM database by performing Procedure 15-6.
4. Choose Administration→NE Maintenance→Software Upgrade from the 5620 SAM main menu. The Software Upgrade form opens with the Software Upgrade Policy tab displayed.
5. Click on the Software Images tab button.
6. Click on the SR Software Images tab button, if required.
7. Choose the appropriate software image for the 7750 MG software upgrade.
8. Click on the Upgrade Sites button. A list of NEs appears. The list is filtered to display only the device type that is appropriate for the specified software image.
9. Choose one or more NEs in the list.
10. Click on the OK button. A dialog box opens.
11. Click on the Yes button to confirm the action. The software upgrade starts.
12. Click on the Software Upgrade Status tab button to view the progress of the upgrade.

**13** Using the upgrade status information displayed in the Software Upgrade Status tab of the Software Upgrade form, verify the following items before proceeding with the software upgrade procedure:

- The Upgrade State column displays a status of CPM Sync and Pending Reboot.
- The Last Uploaded CPM Code Version displays the correct version.
- The Last Successful Upgrade Time column displays the time of the successful upgrade.

When the upgrade status displays the information listed above, the software upload is complete. The NE will use the new software after a reboot. Go to step 14.

**Caution —** You must perform a backup before rebooting the NE in order to synchronize the CPM images.

**14** Perform a backup on the NE by performing Procedure 15-2.

**15** Verify that the backup operation is successful by performing Procedure 15-11 before proceeding to the next step.

**16** Reboot the NE. Perform one of the following actions.

**Warning —** Verify that step 14 has been completed before performing this step.

**a** Use a Telnet or SSH CLI session.

**i** Right-click on the NE and choose NE Session→Telnet Session or NE Session→SSH Session.

**ii** Enter the following at the command prompt:

```
admin reboot now ↵
```

The NE reboots.

**b** Use the 5620 SAM GUI.

**i** Choose Equipment from the 5620 SAM navigation tree drop-down menu.

**ii** Navigate to the NE shelf object. The path is Routing→NE→Shelf.

**iii** Right-click on the shelf object and choose Reboot from the contextual menu. The NE reboots.

**Caution —** Rebooting an NE that is in service is service-affecting. Ensure that the reboot activity occurs during a scheduled maintenance window.

The reboot process lasts approximately 5-10 minutes. When the reboot is complete and the new software is being successfully used by the NE, a 5620 SAM message appears stating that the NE version has changed as a result of a software upgrade.

**17** Verify whether the upgrade is successful, as described in Procedure 15-11.

**18** Use the FTP or SSH file browser to verify whether the transferred files and configurations are on the managed device. See the *5620 SAM User Guide* for more information about using FTP and SSH file browsers.

**19** Fully resynchronize the NE using the 5620 SAM GUI, if required:

**Note —** The 5620 SAM will automatically resynchronize with the NE. Performing a manual resyncronization is optional.

**i** Choose Equipment from the 5620 SAM navigation tree drop-down menu.

**ii** Navigate to the NE.

**iii** Right-click on the NE and choose Resync from the contextual menu.

**20** Perform upgrade verification tests, as required.

## Procedure 15-11 To view the deployment, backup/restore, or software upgrade status of an NE

**1** Perform one of the following actions.

**a** Choose Administration→NE Maintenance→Deployment from the 5620 SAM main menu to view deployment status. The Deployment form opens with the Incomplete Deployments tab displayed.

**i** Double-click on a deployment in the list. The deployment properties form opens.

**ii** View the deployment status.

**b** Choose Administration→NE Maintenance→Backup/Restore from the 5620 SAM main menu to view the backup or restore status. The Backup/Restore form opens with the Backup/Restore Policy tab displayed.

**i** Click on the Backup/Restore Status tab button. The Restore State column of the backup or restore is: Transferring Files, Pending, Reboot, CPM Sync and Reboot, Success, Not Attempted, Save Config, or Failure. The timestamp is also displayed.

**ii** Double-click on a row in the list to display information about the backup or restore operation. You can click on the General, Backups, Configuration Saves, and Faults tab buttons.

**Note —** When you click on the Backups tab button, the date and time in the Config File Version column corresponds to the date and time for the Last Boot Cfg Version on the NE.

**c** Choose Administration→NE Maintenance→Software Upgrade to view the software upgrade status. The Software Upgrade form opens.

**i** Click on the Software Upgrade Status tab button. A list of NEs displayed.

**ii** Double-click on an NE in the list to view information about the upgrade. The Software Upgrade Status form opens.

**iii** Close the Software Upgrade Status form.

**2** Close the form.

# *LTE ePC alarm management*

**16 — Managing LTE ePC alarms**

# 16 — Managing LTE ePC alarms


**16.1 Managing LTE ePC alarms** *16-2*

**16.2 Additional resources** *16-2*

**16.3 Alarm management overview** *16-2*

**16.4 SGW and PGW alarm management** *16-3*

**16.5 9471 MME alarm management** *16-3*

**16.6 5780 DSC alarm management** *16-3*

## 16.1 Managing LTE ePC alarms

This chapter describes 5620 SAM alarm management for LTE devices.

## 16.2 Additional resources

Table 16-1 lists where to find more information about how to manage alarms and how to use alarms for troubleshooting.

**Table 16-1 Alarm management resources**

| For information about | See |
|---|---|
| • LTE activation domain alarms<br>• LTE domain alarms<br>• LTE MME domain alarms<br>• LTE service domain alarms | *5620 SAM LTE Alarm Reference* |
| • managing alarms<br>• alarm status, severity, and aggregation<br>• alarm thresholds<br>• alarm suppression<br>• correlated alarms<br>• automatic purging of alarms<br>• fault management using alarms | *5620 SAM User Guide* |
| Troubleshooting using network alarms | *5620 SAM Troubleshooting Guide* |
| 9471 MME alarms | *9471 MME Alarms Dictionary* |

## 16.3 Alarm management overview

The 5620 SAM converts SNMP traps from NEs and 5620 SAM events to alarms that are associated with the managed equipment, configured services, and policies. The alarm-based fault management system provides the following:

- correlation of alarms with equipment- and service-affecting faults
- updates to the managed object operational status in near-real-time
- alarm policy control that allows a network administrator to specify how to process alarms, and how to create and store the alarm logs
- point-and-click alarm management using the 5620 SAM GUI dynamic alarm list and object properties forms
- ability to log the actions to correct the associated fault by adding notes to the alarm
- alarm history for performing trend analysis

## 16.4 SGW and PGW alarm management

When the 5620 SAM is deployed in the LTE network, the 5620 SAM supports LTE-ePC specific traps that are generated by the ISM Mobile card on the SGW and PGW. The alarm status of the SGW and PGW are represented in the equipment tree and network topology map.

The SGW and PGW alarms are limited to status alarms for the gateway instances. There are also status-related notifications for the EPS peers, which are propagated to the EPS paths. See the alarm description tables in the *5620 SAM Troubleshooting Guide* for a description of the alarms that the 5620 SAM can generate.

## 16.5 9471 MME alarm management

The 5620 SAM converts SNMP traps from the 9471 MME to alarms. In addition, when a fault occurs on a 9471 MME, the 9471 MME generates an alarm and sends a trap to the 5620 SAM that contains all of the information about the alarm. The 5620 SAM generates a corresponding alarm and displays the data in the 5620 SAM alarm subsystem.

### Viewing information about 9471 MME alarms

The list of known 9471 MME alarms are prefixed in 5620 SAM with "Mme" so that 9471 MME alarms can be differentiated from 5620 SAM-generated alarms. If the 5620 SAM receives a trap from the 9471 MME that the 5620 SAM cannot interpret, the alarm is prefixed with “MmeUnknown”.

You can view the properties of an 9471 MME alarm by clicking on the alarm in the 5620 SAM Alarm Window. You can view the information about the alarm in the Alarm Info window. You can click on the Severity, Statistics, Acknowledgement, and Details tab buttons to view additional information about the specified alarm.

### Clearing 9471 MME faults and alarms

The 9471 MME alarms that appear in the 5620 SAM Alarm Window must be cleared using the fault management interface that you access from the 9471 MME MI GUI. See the *9471 MME Alarms Dictionary* for more information about how to clear faults on the 9471 MME. See the alarm description tables in the *5620 SAM LTE Alarm Reference* for a description of the alarms that the 5620 SAM can generate.

## 16.6 5780 DSC alarm management

The existing 5620 SAM infrastructure is used to generate alarms for 5780 DSC NEs. When a state change occurs, the 5780 DSC sends a trap to the 5620 SAM to report the event. The 5620 SAM generates the corresponding alarm. See the alarm description tables in the *5620 SAM Troubleshooting Guide* for a description of the alarms that the 5620 SAM can generate.

# *LTE ePC statistics management*

**17 — Collecting and managing LTE ePC statistics**

# 17 — Collecting and managing LTE ePC statistics


17.1 LTE ePC statistics overview *17-2*

17.2 7750 MG statistics *17-2*

17.3 9471 MME statistics *17-2*

17.4 5780 DSC statistics *17-4*

17.5 LTE statistics configuration *17-4*

17.6 LTE user bearer and SDF statistics *17-5*

## 17.1 LTE ePC statistics overview

The 5620 SAM supports the collection of performance, accounting, and 5620 SAM server performance statistics. The statistics are typically used to monitor and troubleshoot the 5620 SAM, and for SLA and billing functions that are performed by OSS applications that connect to the 5620 SAM. See *5620 SAM Statistics Management Guide* for information about the following:

- configuring statistics collection
- viewing statistics data
- creating graphical representations of statistics data using the Statistics Plotter
- non-LTE NE statistics counters

## 17.2 7750 MG statistics

The 5620 SAM collects statistics from the SGW and PGW for the ISM Mobile card and EPS peers. The 5620 SAM records the statistic counters as 7750 MG statistics. See Appendix A for a list of the supported 7750 MG statistics.

## 17.3 9471 MME statistics

The 9471 MME collects performance management statistics as part of standard operation. The collected statistics are stored in the following:

- MIBs
- 3GPP-compliant XML files

Non-MIB-based counters are collected using the PM job function. A default PM job is created on the 9471 MME at startup. This job collects statistics at 15m intervals and runs indefinitely. You can create additional PM jobs on the 9471 MME, in which you specify the following:

- start time
- collection period duration
- polling interval
- PM statistics counters to collect

Statistics collected by a PM job are stored in a 3GPP-compliant XML file format using a 3GPP-compliant file name. The 9471 MME creates the statistics files at the end of each polling interval and stores them on the local hard disk. Each time a PM job creates a file, the 9471 MME sends a trap to the 5620 SAM to indicate that the file is ready for retrieval.

A 5620 SAM main server retrieves the PM statistics files from the 9471 MME using SCP and stores the files on the local file system for a configurable period. The files are stored in the following directory:

*path*/lte/stats/*date*/mme/*IPaddress*

where

*path* is the 5620 SAM base directory, typically /opt/5620sam

*date* is the date of the statistics collection

*IPaddress* is the 9471 MME IP address in dotted-decimal notation

The 9471 MME statistics files are created in pairs. The file names have the following format:

`AYYYYMMDD.HHMMoffset_SubNetwork=subnet,ManagedElement=name`

`AYYYYMMDD.HHMMoffset_SubNetwork=subnet,ManagedElement=name_-_1`

where

*YYYYMMDD* is the collection date of the first record in the file

*HHMM* is the collection time of the first record in the file

*offset* is the offset from UTC in the format *signHHMM* for example, +0300

*subnet* is the subnet identifier

*name* is the unique name of the 9471 MME

The 5620 SAM supports the following statistics functions:

- statistics record type filtering based on the Family Name
- statistics record viewing from properties forms
- historical statistics graphing using the 5620 SAM Statistics Plotter
- PM job configuration from the Statistics Manager using a statistics collection policy

You can view the collected PM job statistics from a tab on the statistics properties form. Statistics are grouped by family. Each entry in the list is identified by the ID of the PM job that collected the statistics. Table 17-1 lists the statistics families and 5620 SAM objects that display the statistics. See Appendix B for a list of 9471 MME statistics counters.

**Table 17-1 9471 MME statistics by family**

| Family | Properties form |
|---|---|
| Mobility Management (MM) | MME Service |
| Bearer Session Management (BSM) | |
| Dedicated Bearer (DedB) | |
| Hand Over (HO) | |
| Paging | |
| Connections (Conn) | |
| Authentication (Auth) | |
| Delay | |
| Interface (Itfc) | MIF Service |

## 17.4 5780 DSC statistics

The 5620 SAM LTE ePC does not support the collection of 5780 DSC statistics.

## 17.5 LTE statistics configuration

Redundant installations of the 5620 SAM can be configured to allow replication and synchronization of PM statistics files to the auxiliary and backup auxiliary servers. PM statistics file synchronization is disabled by default, and can be enabled and configured by setting the values of the following properties in the nms-server.xml file:

- diskUsageThreshold—Specifies the percentage threshold for disk space usage. A minor alarm is raised by the 5620 SAM when the threshold is crossed. Setting the value to 0 will disable the property.
- lteStatsSyncEnabled—Specifies whether LTE statistics synchronization is enabled.
- lteStatsSyncInterval—Specifies the number of minutes between each file synchronization.
- purgeDiskUsageThreshold—Specifies the percentage threshold for PM statistics files to be purged. A critical alarm is raised by the 5620 SAM when the threshold is crossed. Setting the value to 0 will disable the property.
- timeToKeepFile—Specifies the time in minutes that PM statistics files are kept. The minimum value is 60.

Perform Procedure 17-1 to enable and configure PM statistics file synchronization.

### Procedure 17-1 To configure PM statistics synchronization on a redundant installation of the 5620 SAM

See the beginning of this section for information about the properties described in this procedure.

1. Log on to the 5620 SAM main server station as the samadmin user.
2. Open a console window.
3. Navigate to the server configuration directory, typically /opt/5620sam/server/nms/config.
4. Open the nms-server.xml file by using a plain-text editor.
5. Locate the following XML tag:

```
<lteStats
```

6 Configure the following properties:

- diskUsageThreshold
- lteStatsSyncEnabled
- lteStatsSyncInterval
- purgeDiskUsageThreshold
- timeToKeepFile

7 Save and close the nms-server.xml file.

8 Navigate to the server binary directory, typically /opt/5620sam/server/nms/bin.

9 Enter the following at the prompt:

```
# ./nmsserver.bash read_config ↵
```

The main server reads the nms-server.xml file and changes to the file are updated in the 5620 SAM.

## 17.6 LTE user bearer and SDF statistics

You can use a 5620 SAM GUI or OSS client to collect per-user statistics in the following contexts:

- bearer
- PDN

To collect per-user statistics, you must use the 5620 SAM to create and submit a user statistics query. You can submit a query multiple times to generate multiple statistics snapshots. A query or snapshot is saved until a 5620 SAM operator deletes it. You can delete multiple queries or snapshots at one time.

A query requires the specification of a user IMSI. You can specify optional filter criteria, and can choose which types of information the query returns. See Appendix A for LTE user statistics-counter descriptions.

See Procedure 17-2 for information about collecting and viewing LTE user statistics. See Procedure 17-3 for information about viewing LTE statistics objects. See Procedure 17-4 for information about deleting LTE user statistics queries.

## Procedure 17-2 To collect LTE user statistics

Perform this procedure to create and submit an LTE user statistics query, and to view the query result.

1 Choose Manage→Mobile Core→LTE User Stats from the 5620 SAM main menu. The LTE User Stats form opens.

2 Perform one of the following.

   a Click on the Create New User Stats Query button.

   b Use the LTE User Query Manager. Perform the following steps.

      i Click on the LTE User Query Manager button. The LTE User Statistics Query Manager form opens and displays a navigation tree. You can expand an object in the tree by clicking on the + symbol beside the object.

      ii Right-click on the User Statistics Queries object and choose Create User Statistics Query from the contextual menu. The User Statistics Query (Create) form opens.

3 Configure the Description parameter, if required.

4 Configure the parameters in the Include in the Results panel to specify the types of information that the query is to return:

   - SDF
   - PDN Context
   - SDF Filter
   - Bearer Context

5 Configure the IMSI parameter to identify the user that is the target of the query.

6 Click on the filter name Select button, if required. If you do not select a filter the query will retrieve statistics from all of the gateways in the network. The Select EPC Gateway Filter form opens.

7 Perform one of the following.

   a Choose an existing filter from the list and click on the OK button.

   b Create a new filter by performing the following steps:

      i Click on the Create button. A filter form opens.

      ii Click on the Attribute drop-down menu and choose an attribute.

      iii Click on the Function drop-down menu and choose a function.

      iv Enter a value in the Value field.

      v Click on the Create button to add the filter criteria to the filter.

      vi Repeat the previous steps to add more filter criteria, as required.

      vii Click on the Save button. The Save Filter form opens.

**viii** Configure the parameters:

- Filter Name
- Description
- Public

**ix** Click on the Close button to close the filter form and return to the Select EPC Gateway Filter form.

**x** Choose the filter that you created from the list and click on the OK button to close the Select EPC Gateway Filter form.

**8** Configure the parameters:

- APN Name
- Bearer ID
- SDF Precedence
- SDF Direction
- SDF Filter ID
- Include All APNs
- Include All Bearers
- Include All Precedences
- Include All Directions
- Include All IDs

**9** Click on the OK button. The User Statistics Query (Create) form closes.

**10** Perform one of the following.

**a** If you are using the LTE User Query Manager, the navigation tree displays the query as an object below the User Statistics Queries object. Go to step 11.

**b** If you are not using the LTE User Query Manager, perform the following steps.

**i** Choose User Stat Query using the object selector.

**ii** Click on the Search button. The query is listed on the form.

**iii** Select the query in the list and click on the Submit Query button. The 5620 SAM performs the query.

**iv** Choose User Stat Query using the object selector and click on the Search button. A list of queries is displayed.

**v** Select the new query and click on the Properties button. The query information form is displayed.

**vi** Click on the Snapshots tab button.

**vii** Go to step 13.

**11** Right-click on the query object and choose Submit Query from the contextual menu. The 5620 SAM performs the query.

**12** Expand the query object. A User Statistics Snapshots object is displayed.

**13** Expand the User Statistics Snapshots object. A Snapshot object is displayed.

**14** Expand the Snapshot object. A User Statistics Output object is displayed.

**15** Expand the User Statistics Output object. The following objects are displayed:

- PGW User Data—contains information about the path from the PGW to the PDN
- PGW Bearer Context Data—contains bearer statistics for the user collected by the PGW
- PGW PDN Context Data—contains PDN statistics for the user collected by the PGW
- SGW User Data—contains information about the path from the UE to the SGW
- SGW Bearer Context Data—contains bearer statistics for the user collected by the SGW
- SGW PDN Context Data—contains PDN statistics for the user collected by the SGW

**Note —** SDF information is not available for collection from an SGW.

**16** To view the contents of an object, right-click on the object and choose Properties, or double-click on the object. The *Object* (View) form opens.

**17** View the information, as required.

**18** Close the *Object* (View) form.

**19** Close the LTE User Statistics Query form. The query and snapshot are saved.

## Procedure 17-3 To list and view LTE user statistics objects

Perform this procedure to list and view LTE user statistics objects such as the following:

- LTE user statistics queries
- LTE user statistics query snapshots
- LTE user statistics query snapshot entries that contain user information or user statistics

**1** Choose Manage→Mobile Core→LTE User Statistics from the 5620 SAM main menu. The LTE User Statistics form opens.

**2** Use the object selector to specify the type of object to list and click on the Search button. A list of objects is displayed.

**3** Select an object in the list and click on the Properties button. The object information form is displayed.

**4** View the information on the form, as required.

**5** A user statistics query or user statistics query snapshot form has a tab that contains a navigation tree for displaying the child objects. Click on the tab button to view the child objects, if required.

6 Close the object information form.

7 Close the LTE User Statistics form.

## Procedure 17-4 To delete LTE user statistics queries

Perform this procedure to remove one or more LTE user statistics queries from the 5620 SAM.

**Note —** As an alternative method, you can delete queries from the LTE User Statistics Query Manager form by right-clicking on the query in the navigation tree and choosing Delete from the contextual menu.

1 Choose Manage→Mobile Core→LTE User Statistics from the 5620 SAM main menu. The LTE User Statistics form opens.

2 Use the object selector to specify User Statistics Query and click on the Search button. A list of queries is displayed.

3 Perform one of the following.

   a Delete one or more queries. Select the queries in the list and click on the Delete button. The 5620 SAM deletes the queries.

4 Delete all queries. Perform the following steps.

   i Click on the Delete All Queries button. A dialog box appears.

   ii Select the check box and click on the Yes button. The 5620 SAM deletes all of the queries.

5 Close the LTE User Query Manager form.

## LTE key performance and capacity indicators

You can use a 5620 SAM GUI or an OSS client to collect KPI and KCI statistics from both the serving and PDN gateways. You can configure PM job names, start and stop times, the actual data (MIB table) to be collected, and the frequency of collection. The collected stats are written to an XML file on the NE.

KPI/KCI monitoring provisioning is done in the same way as accounting statistics policy provisioning.

When the PM job is completed, the NE generates a trap indicating that a file is ready for collection. The 5620 SAM collects the file from the node using standard protocols. Once the file is successfully transferred, the 5620 SAM deletes the file from the NE.

The data is stored in a flat file format and is available for export to OSSs through using SAM-O. The 5620 SAM maps the content in the file to the statistics records on its managed objects (bearers, SGW instances, interfaces, and so on).

## Procedure 17-5 To create a KPI/KCI monitoring policy

1 Open a console window on the NE.

2 Type the following command to configure the record you need to create for the KPI/KCI monitoring policy:

**`configure log accounting-policy policy name record record name`** ↵

where
policy name is user-defined
record name is one of the following:

- kpi-system
- kpi-bearer-mgmt
- kpi-bearer-traffic
- kpi-ref-point
- kpi-path-mgmt
- kpi-iom-3
- kpi-bearer-group
- kpi-ref-path-group
- complete-kpi
- kci-system
- kci-bearer-mgmt
- kci--path-mgmt
- complete-kci
- complete-kpi-kci
- kpi-kci-bearer-mgmt
- kpi-kci-path-mgmt
- kpi-kci-system

3 Type the following command to configure the collection interval for the policy.

**`configure log accounting-policy policy name collection-interval min`** ↵

where
policy name is user-defined
min is between 1 and 59

## Procedure 17-6 To define a KPI/KCI log file

1 Open a console window on the NE.

2 Type the following command at the prompt to define the location for a KPI/KCI log file:

**`log file file name location file location`** ↵

where
file name is user-defined
file location is the path for the directory in which you need to save the XML log file

## Procedure 17-7 To enable KPI/KCI statistics collection

1 Open a console window on the NE.

2 Type the following command at the prompt to identify the PDN gateway for the statistics collection:

```
pdn gateway instance instance id ↵
```

where instance id is the unique identifier for the PDN gateway

3 Type the following command to identify the serving gateway for statistics collection:

```
serving gateway instance instance id ↵
```

4 Type the following commands to enable the KPI/KCI collection for the defined PDN gateway and serving gateway.

```
kpi-kci ↵

[no]accounting-policy name collect-stats /* kpi accounting plcy
*/ ↵

[no]accounting-policy name collect-stats /* kci accounting plcy
*/ ↵
```

# *Troubleshooting*

**18 — Troubleshooting LTE mobile services and EPS paths**

# 18 — Troubleshooting LTE mobile services and EPS paths


**18.1 Troubleshooting LTE mobile services and EPS paths** *18-2*

**18.2 Workflow to troubleshoot a mobile service or EPS path connectivity problem** *18-3*

**18.3 Troubleshooting mobile service or EPS path connectivity problems using the STM** *18-3*

# 18.1 Troubleshooting LTE mobile services and EPS paths

This chapter describes how to troubleshoot LTE mobile services and EPS paths problems using the STM OAM diagnostic tools. See the *5620 SAM Troubleshooting Guide* for information about troubleshooting a service using 5620 SAM alarms.

## STM OAM diagnostics for troubleshooting

You can use the 5620 SAM STM OAM diagnostic tools to troubleshoot a mobile service or transport layer problems. The STM provides the ability to group OAM diagnostic tests in test suites for more comprehensive fault monitoring and troubleshooting. A test suite can perform end-to-end testing of a mobile service and the underlying network transport elements.

The use of test suites is especially valuable when multiple objects of the same type require testing. Test suites can be scheduled to run on a regular basis to provide continual network performance feedback.

See the *5620 SAM User Guide* for more information about creating and using the STM test policies and suites.

## Supported STM OAM test types

Table 18-1 lists the LTE objects for which STM tests can be performed, the test types that are supported, and the network components that are tested.

**Table 18-1 Service assurance OAM test types and test objects for LTE networks**

| LTE object | Test type | Network object or service component for test |
|---|---|---|
| Mobile service | ICMP ping<br>ICMP traceroute | Connectivity between SGW, PGW, eNodeB service sites. The tests can be used to identify faults in the underlying S1-U and S5 EPS paths. |
| EPS path | ICMP ping<br>ICMP traceroute | S1-U, S5, S11, and Gx EPS paths. Tests must be initiated from an SGW or a PGW. Tests cannot be initiated from the MME or PCRF. |

### ICMP ping

The ICMP ping OAM tool allows you to determine the reachability of a remote host across the LTE IP network. ICMP pings can be sent in band or out of band. The tool is used with ICMP trace to detect and localize faults in the LTE IP network.

### ICMP trace

The ICMP trace tool allows you to identify the hop-by-hop path to a destination IP address across a mobile service or EPS path. ICMP traces can be sent in band or out of band. The tool is used with ICMP ping to detect and localize faults in the LTE IP network.

### Test scenarios

The ICMP ping and ICMP trace tools can be used in the following scenarios:

- mobile services layer assurance—run a mobile services test to monitor a connection between an eNodeB and its ePC neighbors
- EPS path assurance—test paths that are not part of a mobile service, such as S11, and Gx paths
- scheduled tests—schedule periodic tests on EPS paths to validate connectivity and to save the test records for future analysis

## 18.2 Workflow to troubleshoot a mobile service or EPS path connectivity problem

Perform the following tasks until you identify the root cause of the problem.

1. Open the properties form for the mobile service or EPS path instance that you need to investigate.
2. Verify that there are no alarms associated with the mobile service or EPS path by clicking on the Faults tab button in the Mobile Service (Edit) form or EPS Path (Edit) form.
   a. If there are alarms that affect the service or EPS path, see the *5620 SAM Troubleshooting Guide* for information about individual alarms.
   b. If there are no alarms that affect the service or the EPS path, go to step 3.
3. Verify the connectivity of all egress points in the service. See Procedure 18-1 to use the ICMP ping and ICMP trace diagnostics to troubleshoot the problem.
4. Review the test suite results. See Procedure 18-4 for more information.
5. Contact your Alcatel-Lucent technical support representative if the problem persists.

## 18.3 Troubleshooting mobile service or EPS path connectivity problems using the STM

Perform the following procedures to use the STM to troubleshoot connectivity issues on a mobile service or EPS path.

## Procedure 18-1 To troubleshoot mobile service or EPS path connectivity problems using the STM

**1** Choose Tools→Service Test Manager (STM) from the 5620 SAM main menu. The Manage Tests form appears.

**2** Create a test policy.

**i** From the Service Test Manager (STM) (Create) form, choose Create→Create Test Policy. The Test Policy (Create) form opens with the General tab displayed.

**ii** Configure the parameters:

- ID
- Auto-Assign ID
- Name
- Description
- NE Schedulable—When you enable this parameter, the Test Results panel is displayed in the Test Policy (Create) form. Choose one of the following test results types:
  - Lightweight Execution
  - Ignore probe results
  - Accounting Files
- Entity Type—Choose the Mobile Service or EPS Path (LTE) option.

**iii** Click on the Apply button.

**3** Add a test to the policy.

**i** Click on the Test Definition tab button.

**ii** Perform one or both of the following:

- Create an ICMP ping test. Choose Add→ICMP→Add ICMP Ping. The ICMP Ping Definition (Create) form opens with the General tab displayed. Perform Procedure 18-2 to configure the ICMP ping test. Click on the OK button to save the test definition. The new ICMP ping test appears in the Test Definitions table.
- Create an ICMP trace test. Choose Add→ICMP→Add ICMP Trace. The ICMP Trace Definition (Create) form opens with the General tab displayed. Perform Procedure 18-3 to configure the ICMP trace test. Click on the OK button to save the test definition. The new ICMP trace test appears in the Test Definitions table.

**iii** Click on the Apply button to save the information in the Test Definition tab.

**4** Click on the Update Test Suites button and close the Test Policy (Create) form.

**5** Create a test suite.

**i** From the Service Test Manager (STM) (Create) form, choose Create→Create Test Suite. The Test Suite (Create) form opens with the General tab displayed.

**ii** Configure the parameters:

- ID
- Auto-Assign ID
- Name
- Description
- Entity Type—Choose the Mobile Service or EPS Path (LTE) option.

**Note —** The Entity Type parameter specifies that only test policies created for the same entity type are available for the test suite. The parameter also restricts the predefined tests that are available to those that apply to the entity type. For example, if you set the Entity Type parameter to Mobile Service, only mobile services test policies and entities are available for the rest of the steps in this procedure.

**6** Add the test policy that you configured in steps 2 to 4 to the test suite.

**i** Click on the Test Policy tab button.

**ii** Click on the Add button. The Add window opens.

**iii** Click on the search button to list the available test policies.

**iv** Choose the test policy from the list and click on the OK button. The Add window closes and the policy that you specified appears in the list in the Test Policy tab.

**7** Add test entities to the test suite. The entities are the objects (mobile services or EPS paths) that you need to test.

**i** Click on the Tested Entities tab button. The Add form appears.

**ii** Click on the Add button to add an entity to test. The Add window opens.

**iii** Choose a specific instance for the mobile service or EPS path type.

**iv** Click on the search button to list the available entities.

**v** Choose the entity from the list and click on the OK button. The Add window closes and the specified entity appears in the list in the Entities tab.

**8** Click the Apply button to save the test suite. The Generate Tests button is activated.

**9** Click on the Generate Tests button. The Execute button is activated.

**10** Click on the Execute button to run the test suite.

**11** Close the form.

## Procedure 18-2 To configure and run an ICMP ping

1 Choose Tools→Service Test Manager (STM) from the 5620 SAM main menu. The Service Test Manager form opens.

2 Choose ICMP→Create ICMP Ping from the Create contextual menu. The ICMP Ping (Create) form opens with the General tab displayed.

3 Configure the parameters:

- ID
- Administrative State
- Auto-Assign ID
- Name
- Description
- Ne Schedulable
- NE Persistent

The NE Schedulable parameter is configurable only if the NE Persistent parameter is not enabled. The NE Persistent parameter is configurable only if the NE Schedulable parameter is not enabled.

4 Configure the Target Type parameter. Choose one of the following options:

- EPS Site. Go to step 5.
- EPS Path. Go to step 8.

5 Configure the EPS Instance Site parameter:

**i** Click on the Select button. The Select From Access Gateway - ICMP Ping - Test form opens.

**ii** Click on the Search button to list the available gateways.

**iii** Double-click on a gateway to select it. The form closes and the EPS Instance Site field is populated.

6 Type a value in the Target IP Address field

7 Go to step 11.

8 Configure the EPS Instance Site parameter:

**i** Click on the Select button. The Select From Access Gateway - ICMP Ping - Test form opens.

**ii** Click on the Search button to list the available gateways.

**iii** Double-click on a gateway to select it. The form closes and the EPS Instance Site field is populated.

**9** Configure the EPS Path ID parameter:

**i** Click on the Select button. The Select Using EPS Path - ICMP Ping - Test form opens.

**ii** Click on the Search button to list the available gateways.

**iii** Double-click on an EPS path to select it. The form closes and the EPS Path ID field is populated.

The value for the Type and Path Symmetry parameters are automatically populated when you select the EPS path ID.

**10** Click on the Test Parameters tab button.

**11** Configure the parameters:

- Number of Test Probes
- Probe Interval (seconds)
- Probe Timeout (seconds)
- Size (octets)
- Rapid
- Time To Live
- Data Pattern
- Positional Data Pattern
- DiffServ Field
- Egress Interface Index
- Bypass Routing
- Do Not Fragment
- Forwarding Class
- Forwarding Profile

**12** Click on the Results Configuration tab button.

**13** Configure the parameters:

- Probe History Size (rows)
- Test Failure Threshold
- Probe Failure Threshold
- Trap Generation

**14** Click on the Apply button to save the settings.

**15** Click on the Execute button to start the ICMP ping. A deployed test is created and run.

**16** Click on the Deployed Tests tab button to view the current state of the deployed test. When the test is complete, the deployed test is removed, and you can view the results.

**17** View the test results on the Results tab. The results depend on the type of test. Result information includes:

- Average Round-Trip Time
- Maximum Round-Trip Time
- Minimum Round-Trip Time
- Round-Trip Jitter

**18** To configure another ICMP ping, click on the Clear button and repeat steps 11 to 17. Otherwise, go to step 19.

**19** Click on the Cancel button to close the form.

## Procedure 18-3 To configure and run an ICMP trace

**1** Choose Tools→Service Test Manager (STM) from the 5620 SAM main menu. The Service Test Manager form opens.

**2** Choose ICMP→Create ICMP Trace from the Create contextual menu. The ICMP Trace (Create) form opens with the General tab displayed.

**3** Configure the parameters:

- ID
- Administrative State
- Auto-Assign ID
- NE Schedulable
- Name
- NE Persistent
- Description

The NE Schedulable parameter is configurable only if the NE Persistent parameter is not enabled. The NE Persistent parameter is configurable only if the NE Schedulable parameter is not enabled.

**4** Configure the Target Type parameter. Choose one of the following options:

**a** EPS Site. Go to step 5.

**b** EPS Path. Go to step 8.

**5** Configure the EPS Instance Site parameter:

**i** Click on the Select button. The Select From Access Gateway - ICMP Trace - Test form opens.

**ii** Click on the Search button to list the available gateways.

**iii** Double-click on a gateway to select it. The form closes and the EPS Instance Site field is populated.

**6** Type a value in the Target IP Address field.

**7** Go to step 11.

**8** Configure the EPS Instance Site parameter:

**i** Click on the Select button. The Select From Access Gateway - ICMP Trace - Test form opens.

**ii** Click on the Search button to list the available gateways.

**iii** Double-click on a gateway to select it. The form closes and the EPS Instance Site field is populated.

**9** Configure the EPS Path ID parameter:

**i** Click on the Select button. The Select Using EPS Path - ICMP Trace - Test form opens.

**ii** Click on the Search button to list the available gateways.

**iii** Double-click on an EPS path to select it. The form closes and the EPS Path ID field is populated.

The value for the Type and Path Symmetry parameters are automatically populated when you select the EPS path ID.

**10** Click on the Test Parameters tab button.

**11** Configure the parameters:

- Number of Test Probes
- Probe Interval (seconds)
- Probe Timeout (seconds)
- Maximum Time To Live
- DiffServ Field
- Time to Wait (milliseconds)

**12** Click on the Results Configuration tab button.

**13** Configure the parameters:

- Problem History Size (rows)
- Maximum Failures
- Trap Generation

**14** Click on the Apply button to save the settings.

**15** Click on the Execute button to start the ICMP trace. A deployed test is created and run. Click on the Deployed Tests tab button to view its current state of the deployed test. When the test is complete, the deployed test is removed, and you can view the results.

**16** View the test results on the Results tab. The results depend on the type of test. Result information includes:

- Current Hop Count
- Current Probe Count
- Minimum Round-Trip Time
- Round-Trip Jitter

**Note —** Results of individually run ICMP Trace tests are viewed on the Results tab. The Results tab displays only the result of the last individually run ICMP trace test. Any previous individually run test results are overwritten.

Results from ICMP trace tests that are scheduled or are part of a test suite are also stored on the Results tab. The number of scheduled test results stored corresponds to the value configured in the Probe History Size (rows) parameter. Scheduled ICMP trace test results do not overwrite individually run test results or previously run scheduled test results.

**17** To configure another ICMP trace, click on the Clear button and repeat steps 11 to 16. Otherwise, go to step 18.

**18** Click on the Cancel button to close the form.

## Procedure 18-4 To view test suite results for mobile services or EPS paths

**1** Choose Tools→Service Test Manager (STM) from the 5620 SAM main menu. The Manage Tests form appears.

**2** Choose Aggregated Result (Assurance)→Test Suite Result (Assurance) from the object drop-down list.

**3** Click on the Search button. The STM lists the test suites that you ran. Each entry includes information such as:

- test suite name
- completion status
- timestamp for the test
- success or failure of the test suite

**4** For more information about the test, choose an entry from the list and click on the Properties button. The Properties form appears, from which you can view the test criteria and results, or navigate to the properties form for the mobile service or EPS path for further analysis.

# *Appendices*

**A. 7750 MG Release 3.0 statistics counters** ***A-1***

**B. 9471 MME statistics counters** ***B-1***

# A. 7750 MG Release 3.0 statistics counters

A.1 7750 MG Release 3.0 statistics counters *A-2*

## A.1 7750 MG Release 3.0 statistics counters

This appendix lists in tabular form the statistics counters that the 5620 SAM supports for the 7750 MG, Release 3.0. Each 5620 SAM counter entry in a table contains the name and description of the corresponding device MIB counter.

The 5620 SAM counter name in a table entry is the internal counter identifier that is required for statistics retrieval through the 5620 SAM OSSI. The displayed counter name in the 5620 SAM GUI is typically an expansion of this identifier. For example, the receivedBroadcastPackets counter name in the equipment table corresponds to the Received Broadcast Packets counter name on the Log Record form for an Ethernet port.

**Note 1 —** The tables list the 5620 SAM-supported statistics counters for the current release of the device. Counters that are supported for a previous device release, but not for the current release, are not listed.

**Note 2 —** A statistics counter in the 5620 SAM GUI whose displayed name ends with “Periodic” is a counter that records the difference between the current and previous values of an associated 5620 SAM counter. The OSS equivalent name for a Periodic counter is the name of the 5620 SAM counter with a “Periodic” suffix. The tables in this appendix do not list Periodic counters.

Table A-1 lists each statistics package and the associated statistics-counter table.

**Table A-1 Statistics packages and counter tables**

| Package name | See |
|---|---|
| aapolicy | Table A-2 |
| aclfilter | Table A-3 |
| aps | Table A-4 |
| arp | Table A-5 |
| atm | Table A-6 |
| bgp | Table A-7 |
| bundle | Table A-8 |
| cflowd | Table A-9 |
| dhcp | Table A-10 |
| diameter | Table A-11 |
| equipment | Table A-12 |
| ethernetequipment | Table A-13 |
| fr | Table A-14 |
| gsmp | Table A-15 |
| igmp | Table A-16 |
| ipsec | Table A-17 |
| isa | Table A-18 |

**(1 of 2)**

| Package name | See |
|---|---|
| isis | Table A-19 |
| l2fib | Table A-20 |
| l2fwd | Table A-21 |
| l2tp | Table A-22 |
| lag | Table A-23 |
| ldp | Table A-24 |
| lldp | Table A-25 |
| lte | Table A-26 |
| lteggsn | Table A-27 |
| lteli | Table A-28 |
| mld | Table A-29 |
| mpls | Table A-30 |
| msdp | Table A-31 |
| multicast | Table A-32 |
| multichassis | Table A-33 |
| nat | Table A-34 |
| ospf | Table A-35 |
| pae802_1x | Table A-36 |
| pim | Table A-37 |
| ppp | Table A-38 |
| radiusaccounting | Table A-39 |
| ressubscr | Table A-40 |
| rip | Table A-41 |
| rsvp | Table A-42 |
| rtr | Table A-43 |
| service | Table A-44 |
| sitesec | Table A-45 |
| sonetequipment | Table A-46 |
| srrp | Table A-47 |
| subscrauth | Table A-48 |
| svq | Table A-49 |
| svt | Table A-50 |
| tdmequipment | Table A-51 |
| vpls | Table A-52 |
| vrrp | Table A-53 |

**(2 of 2)**

**Table A-2 aapolicy statistics**

| 5620 SAM counter name | Type | MIB counter name | Description |
|---|---|---|---|
| **BsxAaAccountingStats**<br>MIB table name: TIMETRA-BSX-NG-MIB.tmnxBsxStatAaTable<br>Monitored classes:<br>• aapolicy.Application<br>• aapolicy.ApplicationGroup<br>• isa.AaGroup<br>• isa.AaPartition | | | |
| activeFlowsFromSub | long | tmnxBsxStatAaActFlwsFmSb | The value of tmnxBsxStatAaActFlwsFmSb indicates the number of allowed flows in the subscriber to network direction that are active. |
| activeFlowsToSub | long | tmnxBsxStatAaActFlwsToSb | The value of tmnxBsxStatAaActFlwsToSb indicates the number of allowed flows in the network to subscriber direction that are active. |
| durationFlowsLong | UINT128 | tmnxBsxStatAaHCLngDurFlws | The value of tmnxBsxStatAaHCLngDurFlws indicates the total number of flows with a duration greater than 180 seconds, that have completed. This object is a 64-bit version of tmnxBsxStatAaLngDurFlws. |
| durationFlowsMedium | UINT128 | tmnxBsxStatAaHCMedDurFlws | The value of tmnxBsxStatAaHCMedDurFlws indicates the total number of flows with a duration less than or equal to 180 seconds, but greater than 30 seconds, that have completed. This object is a 64-bit version of tmnxBsxStatAaMedDurFlws. |
| durationFlowsShort | UINT128 | tmnxBsxStatAaHCShrtDurFlws | The value of tmnxBsxStatAaHCShrtDurFlws indicates the total number of flows with a duration less than or equal to 30 seconds, that have completed. This object is a 64-bit version of tmnxBsxStatAaShrtDurFlws. |
| flowsAdmitFromSub | UINT128 | tmnxBsxStatAaHCFlwsAdmFmSb | The value of tmnxBsxStatAaHCFlwsAdmFmSb indicates the total number of flows permitted for the subscriber to network direction. This object is a 64-bit version of tmnxBsxStatAaFlwsAdmFmSb. |
| flowsAdmitToSub | UINT128 | tmnxBsxStatAaHCFlwsAdmToSb | The value of tmnxBsxStatAaHCFlwsAdmToSb indicates the total number of flows permitted for the network to subscriber direction. This object is a 64-bit version of tmnxBsxStatAaFlwsAdmToSb. |
| flowsDenyFromSub | UINT128 | tmnxBsxStatAaHCFlwsDnyFmSb | The value of tmnxBsxStatAaHCFlwsDnyFmSb indicates the total number of flows the dropped subsequent packets in the subscriber to network direction. This object is a 64-bit version of tmnxBsxStatAaFlwsDnyFmSb. |

**(1 of 28)**

| 5620 SAM counter name | Type | MIB counter name | Description |
|---|---|---|---|
| flowsDenyToSub | UINT128 | tmnxBsxStatAaHCFlwsDnyToSb | The value of tmnxBsxStatAaHCFlwsDnyToSb indicates the total number of flows that dropped subsequent packets in the network to subscriber direction. This object is a 64-bit version of tmnxBsxStatAaFlwsDnyToSb. |
| numOfSubscribers | long | tmnxBsxStatAaNumSubscribers | The value of tmnxBsxStatAaNumSubscribers indicates the number of subscribers at the most recent 5-minute snapshot of statistics. |
| octsAdmitFromSub | UINT128 | tmnxBsxStatAaHCOctsAdmFmSb | The value of tmnxBsxStatAaHCOctsAdmFmSb indicates the total number of bytes permitted for the subscriber to network direction. This object is a 64-bit version of tmnxBsxStatAaOctsAdmFmSb. |
| octsAdmitToSub | UINT128 | tmnxBsxStatAaHCOctsAdmToSb | The value of tmnxBsxStatAaHCOctsAdmToSb indicates the total number of bytes permitted for the network to subscriber direction. This object is a 64-bit version of tmnxBsxStatAaOctsAdmToSb. |
| octsDenyFromSub | UINT128 | tmnxBsxStatAaHCOctsDnyFmSb | The value of tmnxBsxStatAaHCOctsDnyFmSb indicates the total number of bytes dropped for the subscriber to network direction. This object is a 64-bit version of tmnxBsxStatAaOctsDnyFmSb. |
| octsDenyToSub | UINT128 | tmnxBsxStatAaHCOctsDnyToSb | The value of tmnxBsxStatAaHCOctsDnyToSb indicates the total number of bytes dropped for the network to subscriber direction. This object is a 64-bit version of tmnxBsxStatAaOctsDnyToSb. |
| pktsAdmitFromSub | UINT128 | tmnxBsxStatAaHCPktsAdmFmSb | The value of tmnxBsxStatAaHCPktsAdmFmSb indicates the total number of packets permitted for the subscriber to network direction. This object is a 64-bit version of tmnxBsxStatAaPktsAdmFmSb. |
| pktsAdmitToSub | UINT128 | tmnxBsxStatAaHCPktsAdmToSb | The value of tmnxBsxStatAaHCPktsAdmToSb indicates the total number of packets permitted for the network to subscriber direction. This object is a 64-bit version of tmnxBsxStatAaPktsAdmToSb. |
| pktsDenyFromSub | UINT128 | tmnxBsxStatAaHCPktsDnyFmSb | The value of tmnxBsxStatAaHCPktsDnyFmSb indicates the total number of packets dropped for the subscriber to network direction. This object is a 64-bit version of tmnxBsxStatAaPktsDnyFmSb. |

**(2 of 28)**

| 5620 SAM counter name | Type | MIB counter name | Description |
|---|---|---|---|
| pktsDenyToSub | UINT128 | tmnxBsxStatAaHCPktsDnyToSb | The value of tmnxBsxStatAaHCPktsDnyToSb indicates the total number of packets dropped for the network to subscriber direction. This object is a 64-bit version of tmnxBsxStatAaPktsDnyToSb. |
| termFlowDuration | UINT128 | tmnxBsxStatAaHCTermFlwDur | The value of tmnxBsxStatAaHCTermFlwDur indicates the sum of all flow durations from first packet seen to last packet seen for flows that have terminated. This object is a 64-bit version of tmnxBsxStatAaTermFlwDur. |
| termFlows | UINT128 | tmnxBsxStatAaHCTermFlws | The value of tmnxBsxStatAaHCTermFlws indicates the total number of allowed flows in both directions that have terminated. This object is a 64-bit version of tmnxBsxStatAaTermFlws. |
| **BsxAaSubAccountingStats**<br>MIB table name: TIMETRA-BSX-NG-MIB.tmnxBsxStatAaSubSdyTable<br>Monitored classes:<br>• ressubscr.ResidentialSubscriberInstance<br>• service.AccessInterface | | | |
| activeFlowsFromSub | long | tmnxBsxStatAaSubSdyActFlwsFmSb | The value of tmnxBsxStatAaSubSdyActFlwsFmSb indicates the number of allowed flows in the subscriber to network direction that are active. |
| activeFlowsToSub | long | tmnxBsxStatAaSubSdyActFlwsToSb | The value of tmnxBsxStatAaSubSdyActFlwsToSb indicates the number of allowed flows in the network to subscriber direction that are active. |
| durationFlowsLong | UINT128 | tmnxBsxStatAaSubSdyHCLngDurFlws | The value of tmnxBsxStatAaSubSdyHCLngDurFlws indicates the total number of flows with a duration greater than 180 seconds, that have completed. This object is a 64-bit version of tmnxBsxStatAaSubSdyLngDurFlws. |
| durationFlowsMedium | UINT128 | tmnxBsxStatAaSubSdyHCMedDurFlws | The value of tmnxBsxStatAaSubSdyHCMedDurFlws indicates the total number of flows with a duration less than or equal to 180 seconds, but greater than 30 seconds, that have completed. This object is a 64-bit version of tmnxBsxStatAaSubSdyMedDurFlws. |
| durationFlowsShort | UINT128 | tmnxBsxStatAaSubSdyHCShrtDurFlws | The value of tmnxBsxStatAaSubSdyHCShrtDurFlws indicates the total number of flows with a duration less than or equal to 30 seconds, that have completed. This object is a 64-bit version of tmnxBsxStatAaSubSdyShrtDurFlws. |

**(3 of 28)**

| 5620 SAM counter name | Type | MIB counter name | Description |
|---|---|---|---|
| flowsAdmitFromSub | UINT128 | tmnxBsxStatAaSubSdyHCFlwsAdmFmSb | The value of tmnxBsxStatAaSubSdyHCFlwsAdmFmSb indicates the total number of flows permitted for the subscriber to network direction. This object is a 64-bit version of tmnxBsxStatAaSubSdyFlwsAdmFmSb. |
| flowsAdmitToSub | UINT128 | tmnxBsxStatAaSubSdyHCFlwsAdmToSb | The value of tmnxBsxStatAaSubSdyHCFlwsAdmToSb indicates the total number of flows permitted for the network to subscriber direction. This object is a 64-bit version of tmnxBsxStatAaSubSdyFlwsAdmToSb. |
| flowsDenyFromSub | UINT128 | tmnxBsxStatAaSubSdyHCFlwsDnyFmSb | The value of tmnxBsxStatAaSubSdyHCFlwsDnyFmSb indicates the total number of flows that dropped subsequent packets in the subscriber to network direction. This object is a 64-bit version of tmnxBsxStatAaSubSdyFlwsDnyFmSb. |
| flowsDenyToSub | UINT128 | tmnxBsxStatAaSubSdyHCFlwsDnyToSb | The value of tmnxBsxStatAaSubSdyHCFlwsDnyToSb indicates the total number of flows that dropped subsequent packets in the network to subscriber direction. This object is a 64-bit version of tmnxBsxStatAaSubSdyFlwsDnyToSb. |
| octsAdmitFromSub | UINT128 | tmnxBsxStatAaSubSdyHCOctsAdmFmSb | The value of tmnxBsxStatAaSubSdyHCOctsAdmFmSb indicates the total number of bytes permitted for the subscriber to network direction. This object is a 64-bit version of tmnxBsxStatAaSubSdyOctsAdmFmSb. |
| octsAdmitFromSub | UINT128 | tmnxBsxStatAaSubSdyOctsAdmFmSb | The value of tmnxBsxStatAaSubSdyOctsAdmFmSb indicates the total number of bytes permitted for the subscriber to network direction. |
| octsAdmitToSub | UINT128 | tmnxBsxStatAaSubSdyHCOctsAdmToSb | The value of tmnxBsxStatAaSubSdyHCOctsAdmToSb indicates the total number of bytes permitted for the network to subscriber direction. This object is a 64-bit version of tmnxBsxStatAaSubSdyOctsAdmToSb. |
| octsDenyFromSub | UINT128 | tmnxBsxStatAaSubSdyHCOctsDnyFmSb | The value of tmnxBsxStatAaSubSdyHCOctsDnyFmSb indicates the total number of bytes dropped for the subscriber to network direction. This object is a 64-bit version of tmnxBsxStatAaSubSdyOctsDnyFmSb. |
| octsDenyToSub | UINT128 | tmnxBsxStatAaSubSdyHCOctsDnyToSb | The value of tmnxBsxStatAaSubSdyHCOctsDnyToSb indicates the total number of bytes dropped for the network to subscriber direction. This object is a 64-bit version of tmnxBsxStatAaSubSdyOctsDnyToSb. |

**(4 of 28)**

| 5620 SAM counter name | Type | MIB counter name | Description |
|---|---|---|---|
| pktsAdmitFromSub | UINT128 | tmnxBsxStatAaSubSdyHCPktsAdmFmSb | The value of tmnxBsxStatAaSubSdyHCPktsAdmFmSb indicates the total number of packets permitted for the subscriber to network direction. This object is a 64-bit version of tmnxBsxStatAaSubSdyPktsAdmFmSb. |
| pktsAdmitToSub | UINT128 | tmnxBsxStatAaSubSdyHCPktsAdmToSb | The value of tmnxBsxStatAaSubSdyHCPktsAdmToSb indicates the total number of packets permitted for the network to subscriber direction. This object is a 64-bit version of tmnxBsxStatAaSubSdyPktsAdmToSb. |
| pktsDenyFromSub | UINT128 | tmnxBsxStatAaSubSdyHCPktsDnyFmSb | The value of tmnxBsxStatAaSubSdyHCPktsDnyFmSb indicates the total number of packets dropped for the subscriber to network direction. This object is a 64-bit version of tmnxBsxStatAaSubSdyPktsDnyFmSb. |
| pktsDenyToSub | UINT128 | tmnxBsxStatAaSubSdyHCPktsDnyToSb | The value of tmnxBsxStatAaSubSdyHCPktsDnyToSb indicates the total number of packets dropped for the network to subscriber direction. This object is a 64-bit version of tmnxBsxStatAaSubSdyPktsDnyToSb. |
| termFlowDuration | UINT128 | tmnxBsxStatAaSubSdyHCTermFlwDur | The value of tmnxBsxStatAaSubSdyHCTermFlwDur indicates the sum of all flow durations from first packet seen to last packet seen for flows that have terminated. This object is a 64-bit version of tmnxBsxStatAaSubSdyTermFlwDur. |
| termFlows | UINT128 | tmnxBsxStatAaSubSdyHCTermFlws | The value of tmnxBsxStatAaSubSdyHCTermFlws indicates the total number of allowed flows that have terminated. This object is a 64-bit version of tmnxBsxStatAaSubSdyTermFlws. |
| **BsxAaSubAccountingStats**<br>MIB table name: TIMETRA-BSX-NG-MIB.tmnxBsxStatAaSubTable<br>Monitored classes:<br>• ressubscr.ResidentialSubscriberInstance<br>• service.AccessInterface | | | |
| activeFlowsFromSub | long | tmnxBsxStatAaSubActFlwsFmSb | The value of tmnxBsxStatAaSubActFlwsFmSb indicates the number of allowed flows in the subscriber to network direction that are active. |
| activeFlowsToSub | long | tmnxBsxStatAaSubActFlwsToSb | The value of tmnxBsxStatAaSubActFlwsToSb indicates the number of allowed flows in the network to subscriber direction that are active. |

**(5 of 28)**

| 5620 SAM counter name | Type | MIB counter name | Description |
|---|---|---|---|
| durationFlowsLong | UINT128 | tmnxBsxStatAaSubHCLngDurFlws | The value of tmnxBsxStatAaSubHCLngDurFlws indicates the total number of flows with a duration greater than 180 seconds, that have completed. This object is a 64-bit version of tmnxBsxStatAaSubLngDurFlws. |
| durationFlowsMedium | UINT128 | tmnxBsxStatAaSubHCMedDurFlws | The value of tmnxBsxStatAaSubHCMedDurFlws indicates the total number of flows with a duration less than or equal to 180 seconds, but greater than 30 seconds, that have completed. This object is a 64-bit version of tmnxBsxStatAaSubMedDurFlws. |
| durationFlowsShort | UINT128 | tmnxBsxStatAaSubHCShrtDurFlws | The value of tmnxBsxStatAaSubHCShrtDurFlws indicates the total number of flows with a duration less than or equal to 30 seconds, that have completed. This object is a 64-bit version of tmnxBsxStatAaSubShrtDurFlws. |
| flowsAdmitFromSub | UINT128 | tmnxBsxStatAaSubHCFlwsAdmFmSb | The value of tmnxBsxStatAaSubHCFlwsAdmFmSb indicates the total number of flows permitted for the subscriber to network direction. This object is a 64-bit version of tmnxBsxStatAaSubFlwsAdmFmSb. |
| flowsAdmitToSub | UINT128 | tmnxBsxStatAaSubHCFlwsAdmToSb | The value of tmnxBsxStatAaSubHCFlwsAdmToSb indicates the total number of flows permitted for the network to subscriber direction. This object is a 64-bit version of tmnxBsxStatAaSubFlwsAdmToSb. |
| flowsDenyFromSub | UINT128 | tmnxBsxStatAaSubHCFlwsDnyFmSb | The value of tmnxBsxStatAaSubHCFlwsDnyFmSb indicates the total number of flows that dropped subsequent packets in the subscriber to network direction. This object is a 64-bit version of tmnxBsxStatAaSubFlwsDnyFmSb. |
| flowsDenyToSub | UINT128 | tmnxBsxStatAaSubHCFlwsDnyToSb | The value of tmnxBsxStatAaSubHCFlwsDnyToSb indicates the total number of flows that dropped subsequent packets in the network to subscriber direction. This object is the 64-bit version of tmnxBsxStatAaSubFlwsDnyToSb. |
| octsAdmitFromSub | UINT128 | tmnxBsxStatAaSubHCOctsAdmFmSb | The value of tmnxBsxStatAaSubHCOctsAdmFmSb indicates the total number of bytes permitted for the subscriber to network direction. This object is a 64-bit version of tmnxBsxStatAaSubOctsAdmFmSb. |
| octsAdmitToSub | UINT128 | tmnxBsxStatAaSubHCOctsAdmToSb | The value of tmnxBsxStatAaSubHCOctsAdmToSb indicates the total number of bytes permitted for the network to subscriber direction. This object is a 64-bit version of tmnxBsxStatAaSubOctsAdmToSb. |

**(6 of 28)**

| 5620 SAM counter name | Type | MIB counter name | Description |
|---|---|---|---|
| octsDenyFromSub | UINT128 | tmnxBsxStatAaSubHCOctsDnyFmSb | The value of tmnxBsxStatAaSubHCOctsDnyFmSb indicates the total number of bytes dropped for the subscriber to network direction. This object is a 64-bit version of tmnxBsxStatAaSubOctsDnyFmSb. |
| octsDenyToSub | UINT128 | tmnxBsxStatAaSubHCOctsDnyToSb | The value of tmnxBsxStatAaSubHCOctsDnyToSb indicates the total number of bytes dropped for the network to subscriber direction. This object is a 64-bit version of tmnxBsxStatAaSubOctsDnyToSb. |
| pktsAdmitFromSub | UINT128 | tmnxBsxStatAaSubHCPktsAdmFmSb | The value of tmnxBsxStatAaSubHCPktsAdmFmSb indicates the total number of packets permitted for the subscriber to network direction. This object is a 64-bit version of tmnxBsxStatAaSubPktsAdmFmSb. |
| pktsAdmitToSub | UINT128 | tmnxBsxStatAaSubHCPktsAdmToSb | The value of tmnxBsxStatAaSubHCPktsAdmToSb indicates the total number of packets permitted for the network to subscriber direction. This object is a 64-bit version of tmnxBsxStatAaSubPktsAdmToSb. |
| pktsDenyFromSub | UINT128 | tmnxBsxStatAaSubHCPktsDnyFmSb | The value of tmnxBsxStatAaSubHCPktsDnyFmSb indicates the total number of packets dropped for the subscriber to network direction. This object is a 64-bit version of tmnxBsxStatAaSubPktsDnyFmSb. |
| pktsDenyToSub | UINT128 | tmnxBsxStatAaSubHCPktsDnyToSb | The value of tmnxBsxStatAaSubHCPktsDnyToSb indicates the total number of packets dropped for the network to subscriber direction. This object is a 64-bit version of tmnxBsxStatAaSubPktsDnyToSb. |
| termFlowDuration | UINT128 | tmnxBsxStatAaSubHCTermFlwDur | The value of tmnxBsxStatAaSubHCTermFlwDur indicates the sum of all flow durations from first packet seen to last packet seen for flows that have terminated. This object is a 64-bit version of tmnxBsxStatAaSubTermFlwDur. |
| termFlows | UINT128 | tmnxBsxStatAaSubHCTermFlws | The value of tmnxBsxStatAaSubHCTermFlws indicates the total number of allowed flows that have terminated. This object is a 64-bit version of tmnxBsxStatAaSubTermFlws. |
| **BsxAppGrpStats**<br>MIB table name: TIMETRA-BSX-NG-MIB.tmnxBsxStatAaTable<br>Monitored class: aapolicy.ApplicationGroup | | | |
| aaName | String | tmnxBsxStatAaName | The value of tmnxBsxStatAaName specifies either the ISA-AA protocol, application or app-group name for which statistics are requested. The tmnxBsxStatAaType is used to determine the statistics type. |

**(7 of 28)**

| 5620 SAM counter name | Type | MIB counter name | Description |
|---|---|---|---|
| activeFlowsFromSub | long | tmnxBsxStatAaActFlwsFmSb | The value of tmnxBsxStatAaActFlwsFmSb indicates the number of allowed flows in the subscriber to network direction that are active. |
| activeFlowsToSub | long | tmnxBsxStatAaActFlwsToSb | The value of tmnxBsxStatAaActFlwsToSb indicates the number of allowed flows in the network to subscriber direction that are active. |
| durationFlowsLong | UINT128 | tmnxBsxStatAaHCLngDurFlws | The value of tmnxBsxStatAaHCLngDurFlws indicates the total number of flows with a duration greater than 180 seconds, that have completed. This object is a 64-bit version of tmnxBsxStatAaLngDurFlws. |
| durationFlowsMedium | UINT128 | tmnxBsxStatAaHCMedDurFlws | The value of tmnxBsxStatAaHCMedDurFlws indicates the total number of flows with a duration less than or equal to 180 seconds, but greater than 30 seconds, that have completed. This object is a 64-bit version of tmnxBsxStatAaMedDurFlws. |
| durationFlowsShort | UINT128 | tmnxBsxStatAaHCShrtDurFlws | The value of tmnxBsxStatAaHCShrtDurFlws indicates the total number of flows with a duration less than or equal to 30 seconds, that have completed. This object is a 64-bit version of tmnxBsxStatAaShrtDurFlws. |
| flowsAdmitFromSub | UINT128 | tmnxBsxStatAaHCFlwsAdmFmSb | The value of tmnxBsxStatAaHCFlwsAdmFmSb indicates the total number of flows permitted for the subscriber to network direction. This object is a 64-bit version of tmnxBsxStatAaFlwsAdmFmSb. |
| flowsAdmitToSub | UINT128 | tmnxBsxStatAaHCFlwsAdmToSb | The value of tmnxBsxStatAaHCFlwsAdmToSb indicates the total number of flows permitted for the network to subscriber direction. This object is a 64-bit version of tmnxBsxStatAaFlwsAdmToSb. |
| flowsDenyFromSub | UINT128 | tmnxBsxStatAaHCFlwsDnyFmSb | The value of tmnxBsxStatAaHCFlwsDnyFmSb indicates the total number of flows the dropped subsequent packets in the subscriber to network direction. This object is a 64-bit version of tmnxBsxStatAaFlwsDnyFmSb. |
| flowsDenyToSub | UINT128 | tmnxBsxStatAaHCFlwsDnyToSb | The value of tmnxBsxStatAaHCFlwsDnyToSb indicates the total number of flows that dropped subsequent packets in the network to subscriber direction. This object is a 64-bit version of tmnxBsxStatAaFlwsDnyToSb. |
| numOfSubscribers | long | tmnxBsxStatAaNumSubscribers | The value of tmnxBsxStatAaNumSubscribers indicates the number of subscribers at the most recent 5-minute snapshot of statistics. |

**(8 of 28)**

| 5620 SAM counter name | Type | MIB counter name | Description |
|---|---|---|---|
| octsAdmitFromSub | UINT128 | tmnxBsxStatAaHCOctsAdmFmSb | The value of tmnxBsxStatAaHCOctsAdmFmSb indicates the total number of bytes permitted for the subscriber to network direction. This object is a 64-bit version of tmnxBsxStatAaOctsAdmFmSb. |
| octsAdmitToSub | UINT128 | tmnxBsxStatAaHCOctsAdmToSb | The value of tmnxBsxStatAaHCOctsAdmToSb indicates the total number of bytes permitted for the network to subscriber direction. This object is a 64-bit version of tmnxBsxStatAaOctsAdmToSb. |
| octsDenyFromSub | UINT128 | tmnxBsxStatAaHCOctsDnyFmSb | The value of tmnxBsxStatAaHCOctsDnyFmSb indicates the total number of bytes dropped for the subscriber to network direction. This object is a 64-bit version of tmnxBsxStatAaOctsDnyFmSb. |
| octsDenyToSub | UINT128 | tmnxBsxStatAaHCOctsDnyToSb | The value of tmnxBsxStatAaHCOctsDnyToSb indicates the total number of bytes dropped for the network to subscriber direction. This object is a 64-bit version of tmnxBsxStatAaOctsDnyToSb. |
| pktsAdmitFromSub | UINT128 | tmnxBsxStatAaHCPktsAdmFmSb | The value of tmnxBsxStatAaHCPktsAdmFmSb indicates the total number of packets permitted for the subscriber to network direction. This object is a 64-bit version of tmnxBsxStatAaPktsAdmFmSb. |
| pktsAdmitToSub | UINT128 | tmnxBsxStatAaHCPktsAdmToSb | The value of tmnxBsxStatAaHCPktsAdmToSb indicates the total number of packets permitted for the network to subscriber direction. This object is a 64-bit version of tmnxBsxStatAaPktsAdmToSb. |
| pktsDenyFromSub | UINT128 | tmnxBsxStatAaHCPktsDnyFmSb | The value of tmnxBsxStatAaHCPktsDnyFmSb indicates the total number of packets dropped for the subscriber to network direction. This object is a 64-bit version of tmnxBsxStatAaPktsDnyFmSb. |
| pktsDenyToSub | UINT128 | tmnxBsxStatAaHCPktsDnyToSb | The value of tmnxBsxStatAaHCPktsDnyToSb indicates the total number of packets dropped for the network to subscriber direction. This object is a 64-bit version of tmnxBsxStatAaPktsDnyToSb. |
| termFlowDuration | UINT128 | tmnxBsxStatAaHCTermFlwDur | The value of tmnxBsxStatAaHCTermFlwDur indicates the sum of all flow durations from first packet seen to last packet seen for flows that have terminated. This object is a 64-bit version of tmnxBsxStatAaTermFlwDur. |

**(9 of 28)**

| 5620 SAM counter name | Type | MIB counter name | Description |
|---|---|---|---|
| termFlows | UINT128 | tmnxBsxStatAaHCTermFlws | The value of tmnxBsxStatAaHCTermFlws indicates the total number of allowed flows in both directions that have terminated. This object is a 64-bit version of tmnxBsxStatAaTermFlws. |
| **BsxAppQosPolicyStats**<br>MIB table name: TIMETRA-BSX-NG-MIB.tmnxBsxAqpStatsTable<br>Monitored class: aapolicy.AppQosPolicy | | | |
| conflicts | long | tmnxBsxAqpStatsConflicts | The value of tmnxBsxAqpStatsConflicts indicates the number of flows that have hit this AQP entry, but resulted in a conflict with the match criteria. |
| flows | long | tmnxBsxAqpStatsFlows | The value of tmnxBsxAqpStatsFlows indicates the number of flows that have hit this entry. In certain cases, a flow may change its attributes thus undergoing a second policy evaluation. In these cases, the flow may be counted against two different AQP entries. |
| **BsxAppStats**<br>MIB table name: TIMETRA-BSX-NG-MIB.tmnxBsxStatAaTable<br>Monitored class: aapolicy.Application | | | |
| aaName | String | tmnxBsxStatAaName | The value of tmnxBsxStatAaName specifies either the ISA-AA protocol, application or app-group name for which statistics are requested. The tmnxBsxStatAaType is used to determine the statistics type. |
| activeFlowsFromSub | long | tmnxBsxStatAaActFlwsFmSb | The value of tmnxBsxStatAaActFlwsFmSb indicates the number of allowed flows in the subscriber to network direction that are active. |
| activeFlowsToSub | long | tmnxBsxStatAaActFlwsToSb | The value of tmnxBsxStatAaActFlwsToSb indicates the number of allowed flows in the network to subscriber direction that are active. |
| durationFlowsLong | UINT128 | tmnxBsxStatAaHCLngDurFlws | The value of tmnxBsxStatAaHCLngDurFlws indicates the total number of flows with a duration greater than 180 seconds, that have completed. This object is a 64-bit version of tmnxBsxStatAaLngDurFlws. |
| durationFlowsMedium | UINT128 | tmnxBsxStatAaHCMedDurFlws | The value of tmnxBsxStatAaHCMedDurFlws indicates the total number of flows with a duration less than or equal to 180 seconds, but greater than 30 seconds, that have completed. This object is a 64-bit version of tmnxBsxStatAaMedDurFlws. |
| durationFlowsShort | UINT128 | tmnxBsxStatAaHCShrtDurFlws | The value of tmnxBsxStatAaHCShrtDurFlws indicates the total number of flows with a duration less than or equal to 30 seconds, that have completed. This object is a 64-bit version of tmnxBsxStatAaShrtDurFlws. |

**(10 of 28)**

| 5620 SAM counter name | Type | MIB counter name | Description |
|---|---|---|---|
| flowsAdmitFromSub | UINT128 | tmnxBsxStatAaHCFlwsAdmFmSb | The value of tmnxBsxStatAaHCFlwsAdmFmSb indicates the total number of flows permitted for the subscriber to network direction. This object is a 64-bit version of tmnxBsxStatAaFlwsAdmFmSb. |
| flowsAdmitToSub | UINT128 | tmnxBsxStatAaHCFlwsAdmToSb | The value of tmnxBsxStatAaHCFlwsAdmToSb indicates the total number of flows permitted for the network to subscriber direction. This object is a 64-bit version of tmnxBsxStatAaFlwsAdmToSb. |
| flowsDenyFromSub | UINT128 | tmnxBsxStatAaHCFlwsDnyFmSb | The value of tmnxBsxStatAaHCFlwsDnyFmSb indicates the total number of flows the dropped subsequent packets in the subscriber to network direction. This object is a 64-bit version of tmnxBsxStatAaFlwsDnyFmSb. |
| flowsDenyToSub | UINT128 | tmnxBsxStatAaHCFlwsDnyToSb | The value of tmnxBsxStatAaHCFlwsDnyToSb indicates the total number of flows that dropped subsequent packets in the network to subscriber direction. This object is a 64-bit version of tmnxBsxStatAaFlwsDnyToSb. |
| numOfSubscribers | long | tmnxBsxStatAaNumSubscribers | The value of tmnxBsxStatAaNumSubscribers indicates the number of subscribers at the most recent 5-minute snapshot of statistics. |
| octsAdmitFromSub | UINT128 | tmnxBsxStatAaHCOctsAdmFmSb | The value of tmnxBsxStatAaHCOctsAdmFmSb indicates the total number of bytes permitted for the subscriber to network direction. This object is a 64-bit version of tmnxBsxStatAaOctsAdmFmSb. |
| octsAdmitToSub | UINT128 | tmnxBsxStatAaHCOctsAdmToSb | The value of tmnxBsxStatAaHCOctsAdmToSb indicates the total number of bytes permitted for the network to subscriber direction. This object is a 64-bit version of tmnxBsxStatAaOctsAdmToSb. |
| octsDenyFromSub | UINT128 | tmnxBsxStatAaHCOctsDnyFmSb | The value of tmnxBsxStatAaHCOctsDnyFmSb indicates the total number of bytes dropped for the subscriber to network direction. This object is a 64-bit version of tmnxBsxStatAaOctsDnyFmSb. |
| octsDenyToSub | UINT128 | tmnxBsxStatAaHCOctsDnyToSb | The value of tmnxBsxStatAaHCOctsDnyToSb indicates the total number of bytes dropped for the network to subscriber direction. This object is a 64-bit version of tmnxBsxStatAaOctsDnyToSb. |

**(11 of 28)**

| 5620 SAM counter name | Type | MIB counter name | Description |
|---|---|---|---|
| pktsAdmitFromSub | UINT128 | tmnxBsxStatAaHCPktsAdmFmSb | The value of tmnxBsxStatAaHCPktsAdmFmSb indicates the total number of packets permitted for the subscriber to network direction. This object is a 64-bit version of tmnxBsxStatAaPktsAdmFmSb. |
| pktsAdmitToSub | UINT128 | tmnxBsxStatAaHCPktsAdmToSb | The value of tmnxBsxStatAaHCPktsAdmToSb indicates the total number of packets permitted for the network to subscriber direction. This object is a 64-bit version of tmnxBsxStatAaPktsAdmToSb. |
| pktsDenyFromSub | UINT128 | tmnxBsxStatAaHCPktsDnyFmSb | The value of tmnxBsxStatAaHCPktsDnyFmSb indicates the total number of packets dropped for the subscriber to network direction. This object is a 64-bit version of tmnxBsxStatAaPktsDnyFmSb. |
| pktsDenyToSub | UINT128 | tmnxBsxStatAaHCPktsDnyToSb | The value of tmnxBsxStatAaHCPktsDnyToSb indicates the total number of packets dropped for the network to subscriber direction. This object is a 64-bit version of tmnxBsxStatAaPktsDnyToSb. |
| termFlowDuration | UINT128 | tmnxBsxStatAaHCTermFlwDur | The value of tmnxBsxStatAaHCTermFlwDur indicates the sum of all flow durations from first packet seen to last packet seen for flows that have terminated. This object is a 64-bit version of tmnxBsxStatAaTermFlwDur. |
| termFlows | UINT128 | tmnxBsxStatAaHCTermFlws | The value of tmnxBsxStatAaHCTermFlws indicates the total number of allowed flows in both directions that have terminated. This object is a 64-bit version of tmnxBsxStatAaTermFlws. |
| **BsxCustProtStats**<br>MIB table name: TIMETRA-BSX-NG-MIB.tmnxBsxStatAaTable<br>Monitored class: aapolicy.CustomProtocol | | | |
| aaName | String | tmnxBsxStatAaName | The value of tmnxBsxStatAaName specifies either the ISA-AA protocol, application or app-group name for which statistics are requested. The tmnxBsxStatAaType is used to determine the statistics type. |
| activeFlowsFromSub | long | tmnxBsxStatAaActFlwsFmSb | The value of tmnxBsxStatAaActFlwsFmSb indicates the number of allowed flows in the subscriber to network direction that are active. |
| activeFlowsToSub | long | tmnxBsxStatAaActFlwsToSb | The value of tmnxBsxStatAaActFlwsToSb indicates the number of allowed flows in the network to subscriber direction that are active. |

**(12 of 28)**

| 5620 SAM counter name | Type | MIB counter name | Description |
|---|---|---|---|
| durationFlowsLong | UINT128 | tmnxBsxStatAaHCLngDurFlws | The value of tmnxBsxStatAaHCLngDurFlws indicates the total number of flows with a duration greater than 180 seconds, that have completed. This object is a 64-bit version of tmnxBsxStatAaLngDurFlws. |
| durationFlowsMedium | UINT128 | tmnxBsxStatAaHCMedDurFlws | The value of tmnxBsxStatAaHCMedDurFlws indicates the total number of flows with a duration less than or equal to 180 seconds, but greater than 30 seconds, that have completed. This object is a 64-bit version of tmnxBsxStatAaMedDurFlws. |
| durationFlowsShort | UINT128 | tmnxBsxStatAaHCShrtDurFlws | The value of tmnxBsxStatAaHCShrtDurFlws indicates the total number of flows with a duration less than or equal to 30 seconds, that have completed. This object is a 64-bit version of tmnxBsxStatAaShrtDurFlws. |
| flowsAdmitFromSub | UINT128 | tmnxBsxStatAaHCFlwsAdmFmSb | The value of tmnxBsxStatAaHCFlwsAdmFmSb indicates the total number of flows permitted for the subscriber to network direction. This object is a 64-bit version of tmnxBsxStatAaFlwsAdmFmSb. |
| flowsAdmitToSub | UINT128 | tmnxBsxStatAaHCFlwsAdmToSb | The value of tmnxBsxStatAaHCFlwsAdmToSb indicates the total number of flows permitted for the network to subscriber direction. This object is a 64-bit version of tmnxBsxStatAaFlwsAdmToSb. |
| flowsDenyFromSub | UINT128 | tmnxBsxStatAaHCFlwsDnyFmSb | The value of tmnxBsxStatAaHCFlwsDnyFmSb indicates the total number of flows the dropped subsequent packets in the subscriber to network direction. This object is a 64-bit version of tmnxBsxStatAaFlwsDnyFmSb. |
| flowsDenyToSub | UINT128 | tmnxBsxStatAaHCFlwsDnyToSb | The value of tmnxBsxStatAaHCFlwsDnyToSb indicates the total number of flows that dropped subsequent packets in the network to subscriber direction. This object is a 64-bit version of tmnxBsxStatAaFlwsDnyToSb. |
| numOfSubscribers | long | tmnxBsxStatAaNumSubscribers | The value of tmnxBsxStatAaNumSubscribers indicates the number of subscribers at the most recent 5-minute snapshot of statistics. |
| octsAdmitFromSub | UINT128 | tmnxBsxStatAaHCOctsAdmFmSb | The value of tmnxBsxStatAaHCOctsAdmFmSb indicates the total number of bytes permitted for the subscriber to network direction. This object is a 64-bit version of tmnxBsxStatAaOctsAdmFmSb. |

**(13 of 28)**

| 5620 SAM counter name | Type | MIB counter name | Description |
|---|---|---|---|
| octsAdmitToSub | UINT128 | tmnxBsxStatAaHCOctsAdmToSb | The value of tmnxBsxStatAaHCOctsAdmToSb indicates the total number of bytes permitted for the network to subscriber direction. This object is a 64-bit version of tmnxBsxStatAaOctsAdmToSb. |
| octsDenyFromSub | UINT128 | tmnxBsxStatAaHCOctsDnyFmSb | The value of tmnxBsxStatAaHCOctsDnyFmSb indicates the total number of bytes dropped for the subscriber to network direction. This object is a 64-bit version of tmnxBsxStatAaOctsDnyFmSb. |
| octsDenyToSub | UINT128 | tmnxBsxStatAaHCOctsDnyToSb | The value of tmnxBsxStatAaHCOctsDnyToSb indicates the total number of bytes dropped for the network to subscriber direction. This object is a 64-bit version of tmnxBsxStatAaOctsDnyToSb. |
| pktsAdmitFromSub | UINT128 | tmnxBsxStatAaHCPktsAdmFmSb | The value of tmnxBsxStatAaHCPktsAdmFmSb indicates the total number of packets permitted for the subscriber to network direction. This object is a 64-bit version of tmnxBsxStatAaPktsAdmFmSb. |
| pktsAdmitToSub | UINT128 | tmnxBsxStatAaHCPktsAdmToSb | The value of tmnxBsxStatAaHCPktsAdmToSb indicates the total number of packets permitted for the network to subscriber direction. This object is a 64-bit version of tmnxBsxStatAaPktsAdmToSb. |
| pktsDenyFromSub | UINT128 | tmnxBsxStatAaHCPktsDnyFmSb | The value of tmnxBsxStatAaHCPktsDnyFmSb indicates the total number of packets dropped for the subscriber to network direction. This object is a 64-bit version of tmnxBsxStatAaPktsDnyFmSb. |
| pktsDenyToSub | UINT128 | tmnxBsxStatAaHCPktsDnyToSb | The value of tmnxBsxStatAaHCPktsDnyToSb indicates the total number of packets dropped for the network to subscriber direction. This object is a 64-bit version of tmnxBsxStatAaPktsDnyToSb. |
| termFlowDuration | UINT128 | tmnxBsxStatAaHCTermFlwDur | The value of tmnxBsxStatAaHCTermFlwDur indicates the sum of all flow durations from first packet seen to last packet seen for flows that have terminated. This object is a 64-bit version of tmnxBsxStatAaTermFlwDur. |
| termFlows | UINT128 | tmnxBsxStatAaHCTermFlws | The value of tmnxBsxStatAaHCTermFlws indicates the total number of allowed flows in both directions that have terminated. This object is a 64-bit version of tmnxBsxStatAaTermFlws. |

**(14 of 28)**

| 5620 SAM counter name | Type | MIB counter name | Description |
|---|---|---|---|
| **BsxProtStats**<br>MIB table name: TIMETRA-BSX-NG-MIB.tmnxBsxStatAaTable<br>Monitored classes:<br>• isa.AaGroup<br>• isa.AaPartition | | | |
| aaName | String | tmnxBsxStatAaName | The value of tmnxBsxStatAaName specifies either the ISA-AA protocol, application or app-group name for which statistics are requested. The tmnxBsxStatAaType is used to determine the statistics type. |
| activeFlowsFromSub | long | tmnxBsxStatAaActFlwsFmSb | The value of tmnxBsxStatAaActFlwsFmSb indicates the number of allowed flows in the subscriber to network direction that are active. |
| activeFlowsToSub | long | tmnxBsxStatAaActFlwsToSb | The value of tmnxBsxStatAaActFlwsToSb indicates the number of allowed flows in the network to subscriber direction that are active. |
| durationFlowsLong | UINT128 | tmnxBsxStatAaHCLngDurFlws | The value of tmnxBsxStatAaHCLngDurFlws indicates the total number of flows with a duration greater than 180 seconds, that have completed. This object is a 64-bit version of tmnxBsxStatAaLngDurFlws. |
| durationFlowsMedium | UINT128 | tmnxBsxStatAaHCMedDurFlws | The value of tmnxBsxStatAaHCMedDurFlws indicates the total number of flows with a duration less than or equal to 180 seconds, but greater than 30 seconds, that have completed. This object is a 64-bit version of tmnxBsxStatAaMedDurFlws. |
| durationFlowsShort | UINT128 | tmnxBsxStatAaHCShrtDurFlws | The value of tmnxBsxStatAaHCShrtDurFlws indicates the total number of flows with a duration less than or equal to 30 seconds, that have completed. This object is a 64-bit version of tmnxBsxStatAaShrtDurFlws. |
| flowsAdmitFromSub | UINT128 | tmnxBsxStatAaHCFlwsAdmFmSb | The value of tmnxBsxStatAaHCFlwsAdmFmSb indicates the total number of flows permitted for the subscriber to network direction. This object is a 64-bit version of tmnxBsxStatAaFlwsAdmFmSb. |
| flowsAdmitToSub | UINT128 | tmnxBsxStatAaHCFlwsAdmToSb | The value of tmnxBsxStatAaHCFlwsAdmToSb indicates the total number of flows permitted for the network to subscriber direction. This object is a 64-bit version of tmnxBsxStatAaFlwsAdmToSb. |
| flowsDenyFromSub | UINT128 | tmnxBsxStatAaHCFlwsDnyFmSb | The value of tmnxBsxStatAaHCFlwsDnyFmSb indicates the total number of flows the dropped subsequent packets in the subscriber to network direction. This object is a 64-bit version of tmnxBsxStatAaFlwsDnyFmSb. |

**(15 of 28)**

| 5620 SAM counter name | Type | MIB counter name | Description |
|---|---|---|---|
| flowsDenyToSub | UINT128 | tmnxBsxStatAaHCFlwsDnyToSb | The value of tmnxBsxStatAaHCFlwsDnyToSb indicates the total number of flows that dropped subsequent packets in the network to subscriber direction. This object is a 64-bit version of tmnxBsxStatAaFlwsDnyToSb. |
| numOfSubscribers | long | tmnxBsxStatAaNumSubscribers | The value of tmnxBsxStatAaNumSubscribers indicates the number of subscribers at the most recent 5-minute snapshot of statistics. |
| octsAdmitFromSub | UINT128 | tmnxBsxStatAaHCOctsAdmFmSb | The value of tmnxBsxStatAaHCOctsAdmFmSb indicates the total number of bytes permitted for the subscriber to network direction. This object is a 64-bit version of tmnxBsxStatAaOctsAdmFmSb. |
| octsAdmitToSub | UINT128 | tmnxBsxStatAaHCOctsAdmToSb | The value of tmnxBsxStatAaHCOctsAdmToSb indicates the total number of bytes permitted for the network to subscriber direction. This object is a 64-bit version of tmnxBsxStatAaOctsAdmToSb. |
| octsDenyFromSub | UINT128 | tmnxBsxStatAaHCOctsDnyFmSb | The value of tmnxBsxStatAaHCOctsDnyFmSb indicates the total number of bytes dropped for the subscriber to network direction. This object is a 64-bit version of tmnxBsxStatAaOctsDnyFmSb. |
| octsDenyToSub | UINT128 | tmnxBsxStatAaHCOctsDnyToSb | The value of tmnxBsxStatAaHCOctsDnyToSb indicates the total number of bytes dropped for the network to subscriber direction. This object is a 64-bit version of tmnxBsxStatAaOctsDnyToSb. |
| pktsAdmitFromSub | UINT128 | tmnxBsxStatAaHCPktsAdmFmSb | The value of tmnxBsxStatAaHCPktsAdmFmSb indicates the total number of packets permitted for the subscriber to network direction. This object is a 64-bit version of tmnxBsxStatAaPktsAdmFmSb. |
| pktsAdmitToSub | UINT128 | tmnxBsxStatAaHCPktsAdmToSb | The value of tmnxBsxStatAaHCPktsAdmToSb indicates the total number of packets permitted for the network to subscriber direction. This object is a 64-bit version of tmnxBsxStatAaPktsAdmToSb. |
| pktsDenyFromSub | UINT128 | tmnxBsxStatAaHCPktsDnyFmSb | The value of tmnxBsxStatAaHCPktsDnyFmSb indicates the total number of packets dropped for the subscriber to network direction. This object is a 64-bit version of tmnxBsxStatAaPktsDnyFmSb. |

**(16 of 28)**

| 5620 SAM counter name | Type | MIB counter name | Description |
|---|---|---|---|
| pktsDenyToSub | UINT128 | tmnxBsxStatAaHCPktsDnyToSb | The value of tmnxBsxStatAaHCPktsDnyToSb indicates the total number of packets dropped for the network to subscriber direction. This object is a 64-bit version of tmnxBsxStatAaPktsDnyToSb. |
| termFlowDuration | UINT128 | tmnxBsxStatAaHCTermFlwDur | The value of tmnxBsxStatAaHCTermFlwDur indicates the sum of all flow durations from first packet seen to last packet seen for flows that have terminated. This object is a 64-bit version of tmnxBsxStatAaTermFlwDur. |
| termFlows | UINT128 | tmnxBsxStatAaHCTermFlws | The value of tmnxBsxStatAaHCTermFlws indicates the total number of allowed flows in both directions that have terminated. This object is a 64-bit version of tmnxBsxStatAaTermFlws. |
| **BsxSapCustRecAppGrpStats**<br>MIB table name: TIMETRA-BSX-NG-MIB.tmnxBsxStatAaSubTable<br>Monitored class: service.AccessInterface | | | |
| activeFlowsFromSub | long | tmnxBsxStatAaSubActFlwsFmSb | The value of tmnxBsxStatAaSubActFlwsFmSb indicates the number of allowed flows in the subscriber to network direction that are active. |
| activeFlowsToSub | long | tmnxBsxStatAaSubActFlwsToSb | The value of tmnxBsxStatAaSubActFlwsToSb indicates the number of allowed flows in the network to subscriber direction that are active. |
| appGrpName | String | tmnxBsxStatAaName | The value of tmnxBsxStatAaName specifies either the ISA-AA protocol, application or app-group name for which statistics are requested. The tmnxBsxStatAaType is used to determine the statistics type. |
| durationFlowsLong | UINT128 | tmnxBsxStatAaSubHCLngDurFlws | The value of tmnxBsxStatAaSubHCLngDurFlws indicates the total number of flows with a duration greater than 180 seconds, that have completed. This object is a 64-bit version of tmnxBsxStatAaSubLngDurFlws. |
| durationFlowsMedium | UINT128 | tmnxBsxStatAaSubHCMedDurFlws | The value of tmnxBsxStatAaSubHCMedDurFlws indicates the total number of flows with a duration less than or equal to 180 seconds, but greater than 30 seconds, that have completed. This object is a 64-bit version of tmnxBsxStatAaSubMedDurFlws. |

**(17 of 28)**

| 5620 SAM counter name | Type | MIB counter name | Description |
|---|---|---|---|
| durationFlowsShort | UINT128 | tmnxBsxStatAaSubHCShrtDurFlws | The value of tmnxBsxStatAaSubHCShrtDurFlws indicates the total number of flows with a duration less than or equal to 30 seconds, that have completed. This object is a 64-bit version of tmnxBsxStatAaSubShrtDurFlws. |
| flowsAdmitFromSub | UINT128 | tmnxBsxStatAaSubHCFlwsAdmFmSb | The value of tmnxBsxStatAaSubHCFlwsAdmFmSb indicates the total number of flows permitted for the subscriber to network direction. This object is a 64-bit version of tmnxBsxStatAaSubFlwsAdmFmSb. |
| flowsAdmitToSub | UINT128 | tmnxBsxStatAaSubHCFlwsAdmToSb | The value of tmnxBsxStatAaSubHCFlwsAdmToSb indicates the total number of flows permitted for the network to subscriber direction. This object is a 64-bit version of tmnxBsxStatAaSubFlwsAdmToSb. |
| flowsDenyFromSub | UINT128 | tmnxBsxStatAaSubHCFlwsDnyFmSb | The value of tmnxBsxStatAaSubHCFlwsDnyFmSb indicates the total number of flows that dropped subsequent packets in the subscriber to network direction. This object is a 64-bit version of tmnxBsxStatAaSubFlwsDnyFmSb. |
| flowsDenyToSub | UINT128 | tmnxBsxStatAaSubHCFlwsDnyToSb | The value of tmnxBsxStatAaSubHCFlwsDnyToSb indicates the total number of flows that dropped subsequent packets in the network to subscriber direction. This object is the 64-bit version of tmnxBsxStatAaSubFlwsDnyToSb. |
| octsAdmitFromSub | UINT128 | tmnxBsxStatAaSubHCOctsAdmFmSb | The value of tmnxBsxStatAaSubHCOctsAdmFmSb indicates the total number of bytes permitted for the subscriber to network direction. This object is a 64-bit version of tmnxBsxStatAaSubOctsAdmFmSb. |
| octsAdmitToSub | UINT128 | tmnxBsxStatAaSubHCOctsAdmToSb | The value of tmnxBsxStatAaSubHCOctsAdmToSb indicates the total number of bytes permitted for the network to subscriber direction. This object is a 64-bit version of tmnxBsxStatAaSubOctsAdmToSb. |
| octsDenyFromSub | UINT128 | tmnxBsxStatAaSubHCOctsDnyFmSb | The value of tmnxBsxStatAaSubHCOctsDnyFmSb indicates the total number of bytes dropped for the subscriber to network direction. This object is a 64-bit version of tmnxBsxStatAaSubOctsDnyFmSb. |
| octsDenyToSub | UINT128 | tmnxBsxStatAaSubHCOctsDnyToSb | The value of tmnxBsxStatAaSubHCOctsDnyToSb indicates the total number of bytes dropped for the network to subscriber direction. This object is a 64-bit version of tmnxBsxStatAaSubOctsDnyToSb. |

**(18 of 28)**

| 5620 SAM counter name | Type | MIB counter name | Description |
|---|---|---|---|
| pktsAdmitFromSub | UINT128 | tmnxBsxStatAaSubHCPktsAdmFmSb | The value of tmnxBsxStatAaSubHCPktsAdmFmSb indicates the total number of packets permitted for the subscriber to network direction. This object is a 64-bit version of tmnxBsxStatAaSubPktsAdmFmSb. |
| pktsAdmitToSub | UINT128 | tmnxBsxStatAaSubHCPktsAdmToSb | The value of tmnxBsxStatAaSubHCPktsAdmToSb indicates the total number of packets permitted for the network to subscriber direction. This object is a 64-bit version of tmnxBsxStatAaSubPktsAdmToSb. |
| pktsDenyFromSub | UINT128 | tmnxBsxStatAaSubHCPktsDnyFmSb | The value of tmnxBsxStatAaSubHCPktsDnyFmSb indicates the total number of packets dropped for the subscriber to network direction. This object is a 64-bit version of tmnxBsxStatAaSubPktsDnyFmSb. |
| pktsDenyToSub | UINT128 | tmnxBsxStatAaSubHCPktsDnyToSb | The value of tmnxBsxStatAaSubHCPktsDnyToSb indicates the total number of packets dropped for the network to subscriber direction. This object is a 64-bit version of tmnxBsxStatAaSubPktsDnyToSb. |
| statsInterval | int | tmnxBsxAaSubStatsInterval | The tmnxBsxAaSubStatsInterval specifies the interval for the retrieval of application assurance subscriber statistics. |
| termFlowDuration | UINT128 | tmnxBsxStatAaSubHCTermFlwDur | The value of tmnxBsxStatAaSubHCTermFlwDur indicates the sum of all flow durations from first packet seen to last packet seen for flows that have terminated. This object is a 64-bit version of tmnxBsxStatAaSubTermFlwDur. |
| termFlows | UINT128 | tmnxBsxStatAaSubHCTermFlws | The value of tmnxBsxStatAaSubHCTermFlws indicates the total number of allowed flows that have terminated. This object is a 64-bit version of tmnxBsxStatAaSubTermFlws. |
| **BsxSapCustRecAppStats**<br>MIB table name: TIMETRA-BSX-NG-MIB.tmnxBsxStatAaSubTable<br>Monitored class: service.AccessInterface | | | |
| activeFlowsFromSub | long | tmnxBsxStatAaSubActFlwsFmSb | The value of tmnxBsxStatAaSubActFlwsFmSb indicates the number of allowed flows in the subscriber to network direction that are active. |
| activeFlowsToSub | long | tmnxBsxStatAaSubActFlwsToSb | The value of tmnxBsxStatAaSubActFlwsToSb indicates the number of allowed flows in the network to subscriber direction that are active. |

**(19 of 28)**

| 5620 SAM counter name | Type | MIB counter name | Description |
|---|---|---|---|
| durationFlowsLong | UINT128 | tmnxBsxStatAaSubHCLngDurFlws | The value of tmnxBsxStatAaSubHCLngDurFlws indicates the total number of flows with a duration greater than 180 seconds, that have completed. This object is a 64-bit version of tmnxBsxStatAaSubLngDurFlws. |
| durationFlowsMedium | UINT128 | tmnxBsxStatAaSubHCMedDurFlws | The value of tmnxBsxStatAaSubHCMedDurFlws indicates the total number of flows with a duration less than or equal to 180 seconds, but greater than 30 seconds, that have completed. This object is a 64-bit version of tmnxBsxStatAaSubMedDurFlws. |
| durationFlowsShort | UINT128 | tmnxBsxStatAaSubHCShrtDurFlws | The value of tmnxBsxStatAaSubHCShrtDurFlws indicates the total number of flows with a duration less than or equal to 30 seconds, that have completed. This object is a 64-bit version of tmnxBsxStatAaSubShrtDurFlws. |
| flowsAdmitFromSub | UINT128 | tmnxBsxStatAaSubHCFlwsAdmFmSb | The value of tmnxBsxStatAaSubHCFlwsAdmFmSb indicates the total number of flows permitted for the subscriber to network direction. This object is a 64-bit version of tmnxBsxStatAaSubFlwsAdmFmSb. |
| flowsAdmitToSub | UINT128 | tmnxBsxStatAaSubHCFlwsAdmToSb | The value of tmnxBsxStatAaSubHCFlwsAdmToSb indicates the total number of flows permitted for the network to subscriber direction. This object is a 64-bit version of tmnxBsxStatAaSubFlwsAdmToSb. |
| flowsDenyFromSub | UINT128 | tmnxBsxStatAaSubHCFlwsDnyFmSb | The value of tmnxBsxStatAaSubHCFlwsDnyFmSb indicates the total number of flows that dropped subsequent packets in the subscriber to network direction. This object is a 64-bit version of tmnxBsxStatAaSubFlwsDnyFmSb. |
| flowsDenyToSub | UINT128 | tmnxBsxStatAaSubHCFlwsDnyToSb | The value of tmnxBsxStatAaSubHCFlwsDnyToSb indicates the total number of flows that dropped subsequent packets in the network to subscriber direction. This object is the 64-bit version of tmnxBsxStatAaSubFlwsDnyToSb. |
| octsAdmitFromSub | UINT128 | tmnxBsxStatAaSubHCOctsAdmFmSb | The value of tmnxBsxStatAaSubHCOctsAdmFmSb indicates the total number of bytes permitted for the subscriber to network direction. This object is a 64-bit version of tmnxBsxStatAaSubOctsAdmFmSb. |
| octsAdmitToSub | UINT128 | tmnxBsxStatAaSubHCOctsAdmToSb | The value of tmnxBsxStatAaSubHCOctsAdmToSb indicates the total number of bytes permitted for the network to subscriber direction. This object is a 64-bit version of tmnxBsxStatAaSubOctsAdmToSb. |

**(20 of 28)**

| 5620 SAM counter name | Type | MIB counter name | Description |
|---|---|---|---|
| octsDenyFromSub | UINT128 | tmnxBsxStatAaSubHCOctsDnyFmSb | The value of tmnxBsxStatAaSubHCOctsDnyFmSb indicates the total number of bytes dropped for the subscriber to network direction. This object is a 64-bit version of tmnxBsxStatAaSubOctsDnyFmSb. |
| octsDenyToSub | UINT128 | tmnxBsxStatAaSubHCOctsDnyToSb | The value of tmnxBsxStatAaSubHCOctsDnyToSb indicates the total number of bytes dropped for the network to subscriber direction. This object is a 64-bit version of tmnxBsxStatAaSubOctsDnyToSb. |
| pktsAdmitFromSub | UINT128 | tmnxBsxStatAaSubHCPktsAdmFmSb | The value of tmnxBsxStatAaSubHCPktsAdmFmSb indicates the total number of packets permitted for the subscriber to network direction. This object is a 64-bit version of tmnxBsxStatAaSubPktsAdmFmSb. |
| pktsAdmitToSub | UINT128 | tmnxBsxStatAaSubHCPktsAdmToSb | The value of tmnxBsxStatAaSubHCPktsAdmToSb indicates the total number of packets permitted for the network to subscriber direction. This object is a 64-bit version of tmnxBsxStatAaSubPktsAdmToSb. |
| pktsDenyFromSub | UINT128 | tmnxBsxStatAaSubHCPktsDnyFmSb | The value of tmnxBsxStatAaSubHCPktsDnyFmSb indicates the total number of packets dropped for the subscriber to network direction. This object is a 64-bit version of tmnxBsxStatAaSubPktsDnyFmSb. |
| pktsDenyToSub | UINT128 | tmnxBsxStatAaSubHCPktsDnyToSb | The value of tmnxBsxStatAaSubHCPktsDnyToSb indicates the total number of packets dropped for the network to subscriber direction. This object is a 64-bit version of tmnxBsxStatAaSubPktsDnyToSb. |
| statsInterval | int | tmnxBsxAaSubStatsInterval | The tmnxBsxAaSubStatsInterval specifies the interval for the retrieval of application assurance subscriber statistics. |
| termFlowDuration | UINT128 | tmnxBsxStatAaSubHCTermFlwDur | The value of tmnxBsxStatAaSubHCTermFlwDur indicates the sum of all flow durations from first packet seen to last packet seen for flows that have terminated. This object is a 64-bit version of tmnxBsxStatAaSubTermFlwDur. |
| termFlows | UINT128 | tmnxBsxStatAaSubHCTermFlws | The value of tmnxBsxStatAaSubHCTermFlws indicates the total number of allowed flows that have terminated. This object is a 64-bit version of tmnxBsxStatAaSubTermFlws. |
| **BsxSapCustRecProtStats**<br>MIB table name: TIMETRA-BSX-NG-MIB.tmnxBsxStatAaSubTable<br>Monitored class: service.AccessInterface | | | |

**(21 of 28)**

| 5620 SAM counter name | Type | MIB counter name | Description |
|---|---|---|---|
| activeFlowsFromSub | long | tmnxBsxStatAaSubActFlwsFmSb | The value of tmnxBsxStatAaSubActFlwsFmSb indicates the number of allowed flows in the subscriber to network direction that are active. |
| activeFlowsToSub | long | tmnxBsxStatAaSubActFlwsToSb | The value of tmnxBsxStatAaSubActFlwsToSb indicates the number of allowed flows in the network to subscriber direction that are active. |
| durationFlowsLong | UINT128 | tmnxBsxStatAaSubHCLngDurFlws | The value of tmnxBsxStatAaSubHCLngDurFlws indicates the total number of flows with a duration greater than 180 seconds, that have completed. This object is a 64-bit version of tmnxBsxStatAaSubLngDurFlws. |
| durationFlowsMedium | UINT128 | tmnxBsxStatAaSubHCMedDurFlws | The value of tmnxBsxStatAaSubHCMedDurFlws indicates the total number of flows with a duration less than or equal to 180 seconds, but greater than 30 seconds, that have completed. This object is a 64-bit version of tmnxBsxStatAaSubMedDurFlws. |
| durationFlowsShort | UINT128 | tmnxBsxStatAaSubHCShrtDurFlws | The value of tmnxBsxStatAaSubHCShrtDurFlws indicates the total number of flows with a duration less than or equal to 30 seconds, that have completed. This object is a 64-bit version of tmnxBsxStatAaSubShrtDurFlws. |
| flowsAdmitFromSub | UINT128 | tmnxBsxStatAaSubHCFlwsAdmFmSb | The value of tmnxBsxStatAaSubHCFlwsAdmFmSb indicates the total number of flows permitted for the subscriber to network direction. This object is a 64-bit version of tmnxBsxStatAaSubFlwsAdmFmSb. |
| flowsAdmitToSub | UINT128 | tmnxBsxStatAaSubHCFlwsAdmToSb | The value of tmnxBsxStatAaSubHCFlwsAdmToSb indicates the total number of flows permitted for the network to subscriber direction. This object is a 64-bit version of tmnxBsxStatAaSubFlwsAdmToSb. |
| flowsDenyFromSub | UINT128 | tmnxBsxStatAaSubHCFlwsDnyFmSb | The value of tmnxBsxStatAaSubHCFlwsDnyFmSb indicates the total number of flows that dropped subsequent packets in the subscriber to network direction. This object is a 64-bit version of tmnxBsxStatAaSubFlwsDnyFmSb. |
| flowsDenyToSub | UINT128 | tmnxBsxStatAaSubHCFlwsDnyToSb | The value of tmnxBsxStatAaSubHCFlwsDnyToSb indicates the total number of flows that dropped subsequent packets in the network to subscriber direction. This object is the 64-bit version of tmnxBsxStatAaSubFlwsDnyToSb. |

**(22 of 28)**

| 5620 SAM counter name | Type | MIB counter name | Description |
|---|---|---|---|
| octsAdmitFromSub | UINT128 | tmnxBsxStatAaSubHCOctsAdmFmSb | The value of tmnxBsxStatAaSubHCOctsAdmFmSb indicates the total number of bytes permitted for the subscriber to network direction. This object is a 64-bit version of tmnxBsxStatAaSubOctsAdmFmSb. |
| octsAdmitToSub | UINT128 | tmnxBsxStatAaSubHCOctsAdmToSb | The value of tmnxBsxStatAaSubHCOctsAdmToSb indicates the total number of bytes permitted for the network to subscriber direction. This object is a 64-bit version of tmnxBsxStatAaSubOctsAdmToSb. |
| octsDenyFromSub | UINT128 | tmnxBsxStatAaSubHCOctsDnyFmSb | The value of tmnxBsxStatAaSubHCOctsDnyFmSb indicates the total number of bytes dropped for the subscriber to network direction. This object is a 64-bit version of tmnxBsxStatAaSubOctsDnyFmSb. |
| octsDenyToSub | UINT128 | tmnxBsxStatAaSubHCOctsDnyToSb | The value of tmnxBsxStatAaSubHCOctsDnyToSb indicates the total number of bytes dropped for the network to subscriber direction. This object is a 64-bit version of tmnxBsxStatAaSubOctsDnyToSb. |
| pktsAdmitFromSub | UINT128 | tmnxBsxStatAaSubHCPktsAdmFmSb | The value of tmnxBsxStatAaSubHCPktsAdmFmSb indicates the total number of packets permitted for the subscriber to network direction. This object is a 64-bit version of tmnxBsxStatAaSubPktsAdmFmSb. |
| pktsAdmitToSub | UINT128 | tmnxBsxStatAaSubHCPktsAdmToSb | The value of tmnxBsxStatAaSubHCPktsAdmToSb indicates the total number of packets permitted for the network to subscriber direction. This object is a 64-bit version of tmnxBsxStatAaSubPktsAdmToSb. |
| pktsDenyFromSub | UINT128 | tmnxBsxStatAaSubHCPktsDnyFmSb | The value of tmnxBsxStatAaSubHCPktsDnyFmSb indicates the total number of packets dropped for the subscriber to network direction. This object is a 64-bit version of tmnxBsxStatAaSubPktsDnyFmSb. |
| pktsDenyToSub | UINT128 | tmnxBsxStatAaSubHCPktsDnyToSb | The value of tmnxBsxStatAaSubHCPktsDnyToSb indicates the total number of packets dropped for the network to subscriber direction. This object is a 64-bit version of tmnxBsxStatAaSubPktsDnyToSb. |
| statsInterval | int | tmnxBsxAaSubStatsInterval | The tmnxBsxAaSubStatsInterval specifies the interval for the retrieval of application assurance subscriber statistics. |

**(23 of 28)**

| 5620 SAM counter name | Type | MIB counter name | Description |
|---|---|---|---|
| termFlowDuration | UINT128 | tmnxBsxStatAaSubHCTermFlwDur | The value of tmnxBsxStatAaSubHCTermFlwDur indicates the sum of all flow durations from first packet seen to last packet seen for flows that have terminated. This object is a 64-bit version of tmnxBsxStatAaSubTermFlwDur. |
| termFlows | UINT128 | tmnxBsxStatAaSubHCTermFlws | The value of tmnxBsxStatAaSubHCTermFlws indicates the total number of allowed flows that have terminated. This object is a 64-bit version of tmnxBsxStatAaSubTermFlws. |
| **BsxSapStudyAppStats**<br>MIB table name: TIMETRA-BSX-NG-MIB.tmnxBsxStatAaSubSdyTable<br>Monitored class: service.AccessInterface | | | |
| activeFlowsFromSub | long | tmnxBsxStatAaSubSdyActFlwsFmSb | The value of tmnxBsxStatAaSubSdyActFlwsFmSb indicates the number of allowed flows in the subscriber to network direction that are active. |
| activeFlowsToSub | long | tmnxBsxStatAaSubSdyActFlwsToSb | The value of tmnxBsxStatAaSubSdyActFlwsToSb indicates the number of allowed flows in the network to subscriber direction that are active. |
| durationFlowsLong | UINT128 | tmnxBsxStatAaSubSdyHCLngDurFlws | The value of tmnxBsxStatAaSubSdyHCLngDurFlws indicates the total number of flows with a duration greater than 180 seconds, that have completed. This object is a 64-bit version of tmnxBsxStatAaSubSdyLngDurFlws. |
| durationFlowsMedium | UINT128 | tmnxBsxStatAaSubSdyHCMedDurFlws | The value of tmnxBsxStatAaSubSdyHCMedDurFlws indicates the total number of flows with a duration less than or equal to 180 seconds, but greater than 30 seconds, that have completed. This object is a 64-bit version of tmnxBsxStatAaSubSdyMedDurFlws. |
| durationFlowsShort | UINT128 | tmnxBsxStatAaSubSdyHCShrtDurFlws | The value of tmnxBsxStatAaSubSdyHCShrtDurFlws indicates the total number of flows with a duration less than or equal to 30 seconds, that have completed. This object is a 64-bit version of tmnxBsxStatAaSubSdyShrtDurFlws. |
| flowsAdmitFromSub | UINT128 | tmnxBsxStatAaSubSdyHCFlwsAdmFmSb | The value of tmnxBsxStatAaSubSdyHCFlwsAdmFmSb indicates the total number of flows permitted for the subscriber to network direction. This object is a 64-bit version of tmnxBsxStatAaSubSdyFlwsAdmFmSb. |

**(24 of 28)**

| 5620 SAM counter name | Type | MIB counter name | Description |
|---|---|---|---|
| flowsAdmitToSub | UINT128 | tmnxBsxStatAaSubSdyHCFlwsAdmToSb | The value of tmnxBsxStatAaSubSdyHCFlwsAdmToSb indicates the total number of flows permitted for the network to subscriber direction. This object is a 64-bit version of tmnxBsxStatAaSubSdyFlwsAdmToSb. |
| flowsDenyFromSub | UINT128 | tmnxBsxStatAaSubSdyHCFlwsDnyFmSb | The value of tmnxBsxStatAaSubSdyHCFlwsDnyFmSb indicates the total number of flows that dropped subsequent packets in the subscriber to network direction. This object is a 64-bit version of tmnxBsxStatAaSubSdyFlwsDnyFmSb. |
| flowsDenyToSub | UINT128 | tmnxBsxStatAaSubSdyHCFlwsDnyToSb | The value of tmnxBsxStatAaSubSdyHCFlwsDnyToSb indicates the total number of flows that dropped subsequent packets in the network to subscriber direction. This object is a 64-bit version of tmnxBsxStatAaSubSdyFlwsDnyToSb. |
| octsAdmitFromSub | UINT128 | tmnxBsxStatAaSubSdyHCOctsAdmFmSb | The value of tmnxBsxStatAaSubSdyHCOctsAdmFmSb indicates the total number of bytes permitted for the subscriber to network direction. This object is a 64-bit version of tmnxBsxStatAaSubSdyOctsAdmFmSb. |
| octsAdmitFromSub | UINT128 | tmnxBsxStatAaSubSdyOctsAdmFmSb | The value of tmnxBsxStatAaSubSdyOctsAdmFmSb indicates the total number of bytes permitted for the subscriber to network direction. |
| octsAdmitToSub | UINT128 | tmnxBsxStatAaSubSdyHCOctsAdmToSb | The value of tmnxBsxStatAaSubSdyHCOctsAdmToSb indicates the total number of bytes permitted for the network to subscriber direction. This object is a 64-bit version of tmnxBsxStatAaSubSdyOctsAdmToSb. |
| octsDenyFromSub | UINT128 | tmnxBsxStatAaSubSdyHCOctsDnyFmSb | The value of tmnxBsxStatAaSubSdyHCOctsDnyFmSb indicates the total number of bytes dropped for the subscriber to network direction. This object is a 64-bit version of tmnxBsxStatAaSubSdyOctsDnyFmSb. |
| octsDenyToSub | UINT128 | tmnxBsxStatAaSubSdyHCOctsDnyToSb | The value of tmnxBsxStatAaSubSdyHCOctsDnyToSb indicates the total number of bytes dropped for the network to subscriber direction. This object is a 64-bit version of tmnxBsxStatAaSubSdyOctsDnyToSb. |
| pktsAdmitFromSub | UINT128 | tmnxBsxStatAaSubSdyHCPktsAdmFmSb | The value of tmnxBsxStatAaSubSdyHCPktsAdmFmSb indicates the total number of packets permitted for the subscriber to network direction. This object is a 64-bit version of tmnxBsxStatAaSubSdyPktsAdmFmSb. |

**(25 of 28)**

| 5620 SAM counter name | Type | MIB counter name | Description |
|---|---|---|---|
| pktsAdmitToSub | UINT128 | tmnxBsxStatAaSubSdyHCPktsAdmToSb | The value of tmnxBsxStatAaSubSdyHCPktsAdmToSb indicates the total number of packets permitted for the network to subscriber direction. This object is a 64-bit version of tmnxBsxStatAaSubSdyPktsAdmToSb. |
| pktsDenyFromSub | UINT128 | tmnxBsxStatAaSubSdyHCPktsDnyFmSb | The value of tmnxBsxStatAaSubSdyHCPktsDnyFmSb indicates the total number of packets dropped for the subscriber to network direction. This object is a 64-bit version of tmnxBsxStatAaSubSdyPktsDnyFmSb. |
| pktsDenyToSub | UINT128 | tmnxBsxStatAaSubSdyHCPktsDnyToSb | The value of tmnxBsxStatAaSubSdyHCPktsDnyToSb indicates the total number of packets dropped for the network to subscriber direction. This object is a 64-bit version of tmnxBsxStatAaSubSdyPktsDnyToSb. |
| termFlowDuration | UINT128 | tmnxBsxStatAaSubSdyHCTermFlwDur | The value of tmnxBsxStatAaSubSdyHCTermFlwDur indicates the sum of all flow durations from first packet seen to last packet seen for flows that have terminated. This object is a 64-bit version of tmnxBsxStatAaSubSdyTermFlwDur. |
| termFlows | UINT128 | tmnxBsxStatAaSubSdyHCTermFlws | The value of tmnxBsxStatAaSubSdyHCTermFlws indicates the total number of allowed flows that have terminated. This object is a 64-bit version of tmnxBsxStatAaSubSdyTermFlws. |
| **BsxSapStudyProtStats**<br>MIB table name: TIMETRA-BSX-NG-MIB.tmnxBsxStatAaSubSdyTable<br>Monitored class: service.AccessInterface | | | |
| activeFlowsFromSub | long | tmnxBsxStatAaSubSdyActFlwsFmSb | The value of tmnxBsxStatAaSubSdyActFlwsFmSb indicates the number of allowed flows in the subscriber to network direction that are active. |
| activeFlowsToSub | long | tmnxBsxStatAaSubSdyActFlwsToSb | The value of tmnxBsxStatAaSubSdyActFlwsToSb indicates the number of allowed flows in the network to subscriber direction that are active. |
| durationFlowsLong | UINT128 | tmnxBsxStatAaSubSdyHCLngDurFlws | The value of tmnxBsxStatAaSubSdyHCLngDurFlws indicates the total number of flows with a duration greater than 180 seconds, that have completed. This object is a 64-bit version of tmnxBsxStatAaSubSdyLngDurFlws. |

**(26 of 28)**

| 5620 SAM counter name | Type | MIB counter name | Description |
|---|---|---|---|
| durationFlowsMedium | UINT128 | tmnxBsxStatAaSubSdyHCMedDurFlws | The value of tmnxBsxStatAaSubSdyHCMedDurFlws indicates the total number of flows with a duration less than or equal to 180 seconds, but greater than 30 seconds, that have completed. This object is a 64-bit version of tmnxBsxStatAaSubSdyMedDurFlws. |
| durationFlowsShort | UINT128 | tmnxBsxStatAaSubSdyHCShrtDurFlws | The value of tmnxBsxStatAaSubSdyHCShrtDurFlws indicates the total number of flows with a duration less than or equal to 30 seconds, that have completed. This object is a 64-bit version of tmnxBsxStatAaSubSdyShrtDurFlws. |
| flowsAdmitFromSub | UINT128 | tmnxBsxStatAaSubSdyHCFlwsAdmFmSb | The value of tmnxBsxStatAaSubSdyHCFlwsAdmFmSb indicates the total number of flows permitted for the subscriber to network direction. This object is a 64-bit version of tmnxBsxStatAaSubSdyFlwsAdmFmSb. |
| flowsAdmitToSub | UINT128 | tmnxBsxStatAaSubSdyHCFlwsAdmToSb | The value of tmnxBsxStatAaSubSdyHCFlwsAdmToSb indicates the total number of flows permitted for the network to subscriber direction. This object is a 64-bit version of tmnxBsxStatAaSubSdyFlwsAdmToSb. |
| flowsDenyFromSub | UINT128 | tmnxBsxStatAaSubSdyHCFlwsDnyFmSb | The value of tmnxBsxStatAaSubSdyHCFlwsDnyFmSb indicates the total number of flows that dropped subsequent packets in the subscriber to network direction. This object is a 64-bit version of tmnxBsxStatAaSubSdyFlwsDnyFmSb. |
| flowsDenyToSub | UINT128 | tmnxBsxStatAaSubSdyHCFlwsDnyToSb | The value of tmnxBsxStatAaSubSdyHCFlwsDnyToSb indicates the total number of flows that dropped subsequent packets in the network to subscriber direction. This object is a 64-bit version of tmnxBsxStatAaSubSdyFlwsDnyToSb. |
| octsAdmitFromSub | UINT128 | tmnxBsxStatAaSubSdyHCOctsAdmFmSb | The value of tmnxBsxStatAaSubSdyHCOctsAdmFmSb indicates the total number of bytes permitted for the subscriber to network direction. This object is a 64-bit version of tmnxBsxStatAaSubSdyOctsAdmFmSb. |
| octsAdmitFromSub | UINT128 | tmnxBsxStatAaSubSdyOctsAdmFmSb | The value of tmnxBsxStatAaSubSdyOctsAdmFmSb indicates the total number of bytes permitted for the subscriber to network direction. |
| octsAdmitToSub | UINT128 | tmnxBsxStatAaSubSdyHCOctsAdmToSb | The value of tmnxBsxStatAaSubSdyHCOctsAdmToSb indicates the total number of bytes permitted for the network to subscriber direction. This object is a 64-bit version of tmnxBsxStatAaSubSdyOctsAdmToSb. |

**(27 of 28)**

| 5620 SAM counter name | Type | MIB counter name | Description |
|---|---|---|---|
| octsDenyFromSub | UINT128 | tmnxBsxStatAaSubSdyHCOctsDnyFmSb | The value of tmnxBsxStatAaSubSdyHCOctsDnyFmSb indicates the total number of bytes dropped for the subscriber to network direction. This object is a 64-bit version of tmnxBsxStatAaSubSdyOctsDnyFmSb. |
| octsDenyToSub | UINT128 | tmnxBsxStatAaSubSdyHCOctsDnyToSb | The value of tmnxBsxStatAaSubSdyHCOctsDnyToSb indicates the total number of bytes dropped for the network to subscriber direction. This object is a 64-bit version of tmnxBsxStatAaSubSdyOctsDnyToSb. |
| pktsAdmitFromSub | UINT128 | tmnxBsxStatAaSubSdyHCPktsAdmFmSb | The value of tmnxBsxStatAaSubSdyHCPktsAdmFmSb indicates the total number of packets permitted for the subscriber to network direction. This object is a 64-bit version of tmnxBsxStatAaSubSdyPktsAdmFmSb. |
| pktsAdmitToSub | UINT128 | tmnxBsxStatAaSubSdyHCPktsAdmToSb | The value of tmnxBsxStatAaSubSdyHCPktsAdmToSb indicates the total number of packets permitted for the network to subscriber direction. This object is a 64-bit version of tmnxBsxStatAaSubSdyPktsAdmToSb. |
| pktsDenyFromSub | UINT128 | tmnxBsxStatAaSubSdyHCPktsDnyFmSb | The value of tmnxBsxStatAaSubSdyHCPktsDnyFmSb indicates the total number of packets dropped for the subscriber to network direction. This object is a 64-bit version of tmnxBsxStatAaSubSdyPktsDnyFmSb. |
| pktsDenyToSub | UINT128 | tmnxBsxStatAaSubSdyHCPktsDnyToSb | The value of tmnxBsxStatAaSubSdyHCPktsDnyToSb indicates the total number of packets dropped for the network to subscriber direction. This object is a 64-bit version of tmnxBsxStatAaSubSdyPktsDnyToSb. |
| protName | String | tmnxBsxStatAaName | The value of tmnxBsxStatAaName specifies either the ISA-AA protocol, application or app-group name for which statistics are requested. The tmnxBsxStatAaType is used to determine the statistics type. |
| termFlowDuration | UINT128 | tmnxBsxStatAaSubSdyHCTermFlwDur | The value of tmnxBsxStatAaSubSdyHCTermFlwDur indicates the sum of all flow durations from first packet seen to last packet seen for flows that have terminated. This object is a 64-bit version of tmnxBsxStatAaSubSdyTermFlwDur. |
| termFlows | UINT128 | tmnxBsxStatAaSubSdyHCTermFlws | The value of tmnxBsxStatAaSubSdyHCTermFlws indicates the total number of allowed flows that have terminated. This object is a 64-bit version of tmnxBsxStatAaSubSdyTermFlws. |

**(28 of 28)**

**Table A-3 aclfilter statistics**

| 5620 SAM counter name | Type | MIB counter name | Description |
|---|---|---|---|
| **HitCountStats**<br>MIB table name: TIMETRA-FILTER-MIB.tIPFilterParamsTable<br>Monitored class: aclfilter.IpFilterEntry | | | |
| egressHitByteCount | UINT128 | tIPFilterParamsEgrHitByteCount | The value of tIPFilterParamsEgrHitByteCount indicates the number of bytes of all egress packets that matched this entry. |
| egressHitCount | UINT128 | tIPFilterParamsEgressHitCount | This object indicates the number of times an egress packet matched this entry. |
| ingressHitByteCount | UINT128 | tIPFilterParamsIngrHitByteCount | The value of tIPFilterParamsIngrHitByteCount indicates the number of bytes of all ingress packets that matched this entry. |
| ingressHitCount | UINT128 | tIPFilterParamsIngressHitCount | This object indicates the number of times an ingress packet matched this entry. |
| **Ipv6HitCountStats**<br>MIB table name: TIMETRA-FILTER-MIB.tIPv6FilterParamsTable<br>Monitored class: aclfilter.Ipv6FilterEntry | | | |
| egressHitByteCount | UINT128 | tIPv6FilterParamsEgrHitByteCount | This tIPv6FilterParamsEgrHitByteCount indicates the number of bytes of all egress packets that matched this entry. |
| egressHitCount | UINT128 | tIPv6FilterParamsEgressHitCount | This object indicates the number of times an egress packet matched this entry. |
| ingressHitByteCount | UINT128 | tIPv6FilterParamsIngrHitByteCount | The value of tIPv6FilterParamsIngrHitByteCount indicates the number of bytes of all ingress packets that matched this entry. |
| ingressHitCount | UINT128 | tIPv6FilterParamsIngressHitCount | This object indicates the number of times an ingress packet matched this entry. |
| **MacHitCountStats**<br>MIB table name: TIMETRA-FILTER-MIB.tMacFilterParamsTable<br>Monitored class: aclfilter.MacFilterEntry | | | |
| egressHitByteCount | UINT128 | tMacFilterParamsEgrHitByteCount | The value of tMacFilterParamsEgrHitByteCount indicates the number of bytes of all egress packets that matched this entry. |
| egressHitCount | UINT128 | tMacFilterParamsEgressHitCount | This object indicates the number of times an egress packet matched this entry. |
| ingressHitByteCount | UINT128 | tMacFilterParamsIngrHitByteCount | The value of tMacFilterParamsIngrHitByteCount indicates the number of bytes of all ingress packets that matched this entry. |
| ingressHitCount | UINT128 | tMacFilterParamsIngressHitCount | This object indicates the number of times an ingress packet matched this entry. |

**Table A-4 aps statistics**

| 5620 SAM counter name | Type | MIB counter name | Description |
|---|---|---|---|
| **ApsChannelStats**<br>MIB table name: APS-MIB.apsChanStatusTable<br>Monitored class: aps.ApsChannel | | | |
| discontinuityTime | long | apsChanStatusDiscontinuityTime | The value of sysUpTime on the most recent occasion at which any one or more of this channel's counters suffered a discontinuity. The relevant counters are the specific instances associated with this channel of any Counter32 object contained in apsChanStatusTable. If no such discontinuities have occurred since the last re-initialization of the local management subsystem, then this object contains a zero value. |
| lastSwitchover | long | apsChanStatusLastSwitchover | When queried with index value apsChanConfigNumber other than 0, this object will return the value of sysUpTime when this channel last completed a switch to the protection line. If this channel has never switched to the protection line, the value 0 will be returned. When queried with index value apsChanConfigNumber set to 0, which is the protection line, this object will return the value of sysUpTime the last time that a working channel was switched back to the working line from this protection line. If no working channel has ever switched back to the working line from this protection line, the value 0 will be returned. |
| signalDegrades | long | apsChanStatusSignalDegrades | A count of Signal Degrade conditions. This condition occurs when the line Bit Error Rate exceeds the currently configured value of the relevant instance of apsConfigSdBerThreshold. Discontinuities in the value of this counter can occur at re-initialization of the management system, and at other times as indicated by the value of apsChanStatusDiscontinuityTime. |
| signalFailures | long | apsChanStatusSignalFailures | A count of Signal Failure conditions that have been detected on the incoming signal. This condition occurs when a loss of signal, loss of frame, AIS-L or a Line bit error rate exceeding the currently configured value of the relevant instance of apsConfigSfBerThreshold. Discontinuities in the value of this counter can occur at re-initialization of the management system, and at other times as indicated by the value of apsChanStatusDiscontinuityTime. |

**(1 of 3)**

| 5620 SAM counter name | Type | MIB counter name | Description |
|---|---|---|---|
| switchovers | long | apsChanStatusSwitchovers | When queried with index value apsChanConfigNumber other than 0, this object will return the number of times this channel has switched to the protection line. When queried with index value apsChanConfigNumber set to 0, which is the protection line, this object will return the number of times that any working channel has been switched back to the working line from this protection line. Discontinuities in the value of this counter can occur at re-initialization of the management system, and at other times as indicated by the value of apsChanStatusDiscontinuityTime. |
| switchoverSeconds | long | apsChanStatusSwitchoverSeconds | The cumulative Protection Switching Duration (PSD) time in seconds. For a working channel, this is the cumulative number of seconds that service was carried on the protection line. For the protection line, this is the cumulative number of seconds that the protection line has been used to carry any working channel traffic. This information is only valid if revertive switching is enabled. The value 0 will be returned otherwise. Discontinuities in the value of this counter can occur at re-initialization of the management system, and at other times as indicated by the value of apsChanStatusDiscontinuityTime. For example, if the value of an instance of apsChanStatusSwitchoverSeconds changes from a non-zero value to zero due to revertive switching being disabled, it is expected that the corresponding value of apsChanStatusDiscontinuityTime will be updated to reflect the time of the configuration change. |
| **ApsGroupStats**<br>MIB table name: APS-MIB.apsStatusTable<br>Monitored class: aps.ApsGroup | | | |
| channelMismatches | long | apsStatusChannelMismatches | A count of Channel Mismatch conditions. Discontinuities in the value of this counter can occur at re-initialization of the management system, and at other times as indicated by the value of apsStatusDiscontinuityTime. |
| discontinuityTime | long | apsStatusDiscontinuityTime | The value of sysUpTime on the most recent occasion at which any one or more of this APS group's counters suffered a discontinuity. The relevant counters are the specific instances associated with this APS group of any Counter32 object contained in apsStatusTable. If no such discontinuities have occurred since the last re-initialization of the local management subsystem, then this object contains a zero value. |

**(2 of 3)**

| 5620 SAM counter name | Type | MIB counter name | Description |
|---|---|---|---|
| fEPLFs | long | apsStatusFEPLFs | A count of Far-End Protection-Line Failure conditions. This condition is declared based on receiving SF on the protection line in the K1 byte. Discontinuities in the value of this counter can occur at re-initialization of the management system, and at other times as indicated by the value of apsStatusDiscontinuityTime. |
| modeMismatches | long | apsStatusModeMismatches | A count of Mode Mismatch conditions. Discontinuities in the value of this counter can occur at re-initialization of the management system, and at other times as indicated by the value of apsStatusDiscontinuityTime. |
| pSBFs | long | apsStatusPSBFs | A count of Protection Switch Byte Failure conditions. This condition occurs when either an inconsistent APS byte or an invalid code is detected. An inconsistent APS byte occurs when no three consecutive K1 bytes of the last 12 successive frames are identical, starting with the last frame containing a previously consistent byte. An invalid code occurs when the incoming K1 byte contains an unused code or a code irrelevant for the specific switching operation (e.g., Reverse Request while no switching request is outstanding) in three consecutive frames. An invalid code also occurs when the incoming K1 byte contains an invalid channel number in three consecutive frames. Discontinuities in the value of this counter can occur at re-initialization of the management system, and at other times as indicated by the value of apsStatusDiscontinuityTime. |

**(3 of 3)**

### Table A-5 arp statistics

| 5620 SAM counter name | Type | MIB counter name | Description |
|---|---|---|---|
| **SapArpHostStats**<br>MIB table name: TIMETRA-SAP-MIB.sapArpHostStatTable<br>Monitored classes:<br>• vpls.AbstractL2AccessInterface<br>• ies.ServiceAccessPoint<br>• vprn.ServiceAccessPoint | | | |
| numAuthReq | long | sapArpHostStatNumAuthReq | The value of sapArpHostStatNumAuthReq indicates the number of times that the system initiated an authentication request for an ARP host on this SAP since the last re-initialization of the local network management subsystem, or the last time the system statistics were cleared. |

**(1 of 2)**

| 5620 SAM counter name | Type | MIB counter name | Description |
|---|---|---|---|
| numCreated | long | sapArpHostStatNumCreated | The value of sapArpHostStatNumCreated indicates the number of times that an ARP host was created on this SAP since the last re-initialization of the local network management subsystem, or the last time the system statistics were cleared. |
| numDeleted | long | sapArpHostStatNumDeleted | The value of sapArpHostStatNumDeleted indicates the number of times that an ARP host was deleted on this SAP since the last re-initialization of the local network management subsystem, or the last time the system statistics were cleared. |
| numForcedVerif | long | sapArpHostStatNumForcedVerif | The value of sapArpHostStatNumForcedVerif indicates the number of times that the system started a forced subscriber host connectivity verification for an ARP host on this SAP since the last re-initialization of the local network management subsystem, or the last time the system statistics were cleared. |
| numHosts | long | sapArpHostStatNumHosts | The value of sapArpHostStatNumHosts indicates the actual number of ARP hosts on this SAP. |
| numUpdated | long | sapArpHostStatNumUpdated | The value of sapArpHostStatNumUpdated indicates the number of times that an ARP host was updated on this SAP since the last re-initialization of the local network management subsystem, or the last time the system statistics were cleared. |
| triggersIgnored | long | sapArpHostStatTriggersIgnored | The value of sapArpHostStatTriggersIgnored indicates the number of ARP triggers received on this SAP that did not result in the creation of a new ARP host since the last re-initialization of the local network management subsystem, or the last time the system statistics were cleared. This number does not include the number indicated by sapArpHostStatTrigIgnQFull. |
| triggersRx | long | sapArpHostStatTriggersRx | The value of sapArpHostStatTriggersRx indicates the number of ARP triggers received on this SAP since the last re-initialization of the local network management subsystem, or the last time the system statistics were cleared. |
| trigIgnQFull | long | sapArpHostStatTrigIgnQFull | The value of sapArpHostStatTrigIgnQFull indicates the number of ARP triggers received on this SAP that did not result in the creation of a new ARP host because the internal ARP trigger event queue of the system was full, since the last re-initialization of the local network management subsystem, or the last time the system statistics were cleared. |

**(2 of 2)**

**Table A-6 atm statistics**

| 5620 SAM counter name | Type | MIB counter name | Description |
|---|---|---|---|
| **AtmIfcStatistics**<br>MIB table name: TIMETRA-ATM-MIB.tAtmIfcStatisticsTable<br>Monitored class: atm.IfConnection | | | |
| tAtmIfcStatsDrpCellsRxd | long | tAtmIfcStatsDrpCellsRxd | The value of tAtmIfcStatsDrpCellsRxd indicates the number of all policer cells discards (CLP=0+1) of the IFC. This excludes any buffer management discards (if applicable). |
| tAtmIfcStatsDrpClp0CellsRxd | long | tAtmIfcStatsDrpClp0Cells Rxd | The value of tAtmIfcStatsDrpClp0CellsRxd indicates the number of all policer CLP=0 cells discards of the IFC. This excludes any buffer management discards (if applicable). |
| tAtmIfcStatsDrpClp0CellsTxd | long | tAtmIfcStatsDrpClp0Cells Txd | The value of tAtmIfcStatsDrpClp0CellsTxd indicates the number of all CLP=0 cells discards of this IFC. This includes both discards due to buffer management and policer. |
| tAtmIfcStatsTagCells | long | tAtmIfcStatsTagCells | The value of tAtmIfcStatsTagCells indicates the number of tagged CLP=0 cells of the IFC. The egress may or may not discard these cells. |
| tAtmIfcStatsTotalBytesRxd | UINT128 | tAtmIfcStatsTotalBytesTx d | The value of tAtmIfcStatsTotalBytesTxd indicates the number of bytes transmitted by this IFC. This is the number of tAtmIfcStatsTotalCellsTxd multiplied by 53. |
| tAtmIfcStatsTotalBytesTxd | UINT128 | tAtmIfcStatsTotalBytesRx d | The value of tAtmIfcStatsTotalBytesRxd indicates the number of bytes received by this IFC. This is the number of tAtmIfcStatsTotalCellsRxd multiplied by 53. |
| tAtmIfcStatsTotalCellsRxd | UINT128 | tAtmIfcStatsTotalCellsRx d | The value of tAtmIfcStatsTotalCellsRxd indicates the number of valid ATM cells received by the IFC including both CLP=0 and CLP=1 cells. If traffic policing is implemented, then cells are counted prior to the application of traffic policing. |
| tAtmIfcStatsTotalCellsTxd | UINT128 | tAtmIfcStatsTotalCellsTx d | The value of tAtmIfcStatsTotalCellsTxd indicates the number of valid ATM cells transmitted by the IFC including both CLP=0 and CLP=1 cells. If traffic policing is implemented, then cells are counted prior to the application of traffic policing. |
| tAtmIfcStatsTotalClp0CellsRxd | UINT128 | tAtmIfcStatsTotalClp0Cel lsRxd | The value of tAtmIfcStatsTotalClp0CellsRxd indicates the number of valid ATM CLP=0 cells received by the IFC. If traffic policing is implemented, then cells are counted prior to the application of traffic policing. |

**(1 of 10)**

| 5620 SAM counter name | Type | MIB counter name | Description |
|---|---|---|---|
| tAtmIfcStatsTotalClp0CellsTxd | UINT128 | tAtmIfcStatsTotalClp0CellsTxd | The value of tAtmIfcStatsTotalClp0CellsTxd indicates the number of valid ATM CLP=0 cells transmitted by the IFC. If traffic policing is implemented, then cells are counted prior to the application of traffic policing. |
| **AtmOamVplStatistics**<br>MIB table name: TIMETRA-ATM-MIB.tAtmOamVplStatisticsTable<br>Monitored class: atm.VPConnection | | | |
| tAtmOamVplStatsAISCellsRxd | long | tAtmOamVplStatsAISCellsRxd | The value of tAtmOamVplStatsAISCellsRxd indicates the number of AIS cells received on this VPL for both end to end and segment. |
| tAtmOamVplStatsAISCellsTxd | long | tAtmOamVplStatsAISCellsTxd | The value of tAtmOamVplStatsAISCellsTxd indicates the number of AIS cells transmitted on this VPL for both end to end and segment. |
| tAtmOamVplStatsCrc10Errors | long | tAtmOamVplStatsCrc10Errors | The value of tAtmOamVplStatsCrc10Errors indicates the number of OAM cells discarded on this VPL with CRC 10 errors. |
| tAtmOamVplStatsLoopbackCellsRxd | long | tAtmOamVplStatsLoopbackCellsRxd | The value of tAtmOamVplStatsLoopbackCellsRxd indicates the number of loopback requests and responses received on this VPL for both end to end and segment. |
| tAtmOamVplStatsLoopbackCellsTxd | long | tAtmOamVplStatsLoopbackCellsTxd | The value of tAtmOamVplStatsLoopbackCellsTxd indicates the number of loopback requests and responses transmitted on this VPL for both end to end and segment. |
| tAtmOamVplStatsOtherCellsRxd | long | tAtmOamVplStatsOtherCellsRxd | This value of tAtmOamVplStatsOtherCellsRxd indicates the number of OAM cells that are received on this VPL but not identified. |
| tAtmOamVplStatsRDICellsRxd | long | tAtmOamVplStatsRDICellsRxd | The value of tAtmOamVplStatsRDICellsRxd indicates the number of RDI cells received on this VPL for both end to end and segment. |
| tAtmOamVplStatsRDICellsTxd | long | tAtmOamVplStatsRDICellsTxd | The value of tAtmOamVplStatsRDICellsTxd indicates the number of RDI cells transmitted on this VPL for both end to end and segment. |
| **AtmVplStatistics**<br>MIB table name: TIMETRA-ATM-MIB.tAtmVplStatisticsTable<br>Monitored class: atm.VPConnection | | | |
| tAtmVplStatsDrpCellsRxd | long | tAtmVplStatsDrpCellsRxd | The value of tAtmVplStatsDrpCellsRxd indicates the number of all policer cells discards (CLP=0+1) of the VPL. This excludes any buffer management discards (if applicable). |

**(2 of 10)**

| 5620 SAM counter name | Type | MIB counter name | Description |
|---|---|---|---|
| tAtmVplStatsDrpClp0CellsRxd | long | tAtmVplStatsDrpClp0CellsRxd | The value of tAtmVplStatsDrpClp0CellsRxd indicates the number of all policer CLP=0 cells discards of the VPL. This excludes any buffer management discards (if applicable). |
| tAtmVplStatsDrpClp0CellsTxd | long | tAtmVplStatsDrpClp0CellsTxd | The value of tAtmVplStatsDrpClp0CellsTxd indicates the number of all CLP=0 cells discards of this VPL. This includes both discards due to buffer management and policer. |
| tAtmVplStatsTagCells | long | tAtmVplStatsTagCells | The value of tAtmVplStatsTagCells indicates the number of tagged CLP=0 cells of the VPL. The egress may or may not discard these cells. |
| tAtmVplStatsTotalBytesRxd | UINT128 | tAtmVplStatsTotalBytesRxd | The value of tAtmVplStatsTotalBytesRxd indicates the number of bytes received by this VPL. This is the number of tAtmVplStatsTotalCellsRxd multiplied by 53. |
| tAtmVplStatsTotalBytesTxd | UINT128 | tAtmVplStatsTotalBytesTxd | The value of tAtmVplStatsTotalBytesTxd indicates the number of bytes transmitted by this VPL. This is the number of tAtmVplStatsTotalCellsTxd multiplied by 53. |
| tAtmVplStatsTotalCellsRxd | UINT128 | tAtmVplStatsTotalCellsRxd | The value of tAtmVplStatsTotalCellsRxd indicates the number of valid ATM cells received by the VPL including both CLP=0 and CLP=1 cells. If traffic policing is implemented, then cells are counted prior to the application of traffic policing. |
| tAtmVplStatsTotalCellsTxd | UINT128 | tAtmVplStatsTotalCellsTxd | The value of tAtmVplStatsTotalCellsTxd indicates the number of valid ATM cells transmitted by the VPL including both CLP=0 and CLP=1 cells. If traffic policing is implemented, then cells are counted prior to the application of traffic policing. |
| tAtmVplStatsTotalClp0CellsRxd | UINT128 | tAtmVplStatsTotalClp0CellsRxd | The value of tAtmVplStatsTotalClp0CellsRxd indicates the number of valid ATM CLP=0 cells received by the VPL. If traffic policing is implemented, then cells are counted prior to the application of traffic policing. |
| tAtmVplStatsTotalClp0CellsTxd | UINT128 | tAtmVplStatsTotalClp0CellsTxd | The value of tAtmVplStatsTotalClp0CellsTxd indicates the number of valid ATM CLP=0 cells transmitted by the VPL. If traffic policing is implemented, then cells are counted prior to the application of traffic policing. |
| **AtmVtlStatistics**<br>MIB table name: TIMETRA-ATM-MIB.tAtmVtlStatisticsTable<br>Monitored class: atm.VTConnection | | | |

**(3 of 10)**

| 5620 SAM counter name | Type | MIB counter name | Description |
|---|---|---|---|
| tAtmVtlStatsDrpCellsRxd | long | tAtmVtlStatsDrpCellsRxd | The value of tAtmVtlStatsDrpCellsRxd indicates the number of all policer cells discards (CLP=0+1) of the VTL. This excludes any buffer management discards (if applicable). |
| tAtmVtlStatsDrpClp0CellsRxd | long | tAtmVtlStatsDrpClp0Cells Rxd | The value of tAtmVtlStatsDrpClp0CellsRxd indicates the number of all policer CLP=0 cells discards of the VTL. This excludes any buffer management discards (if applicable). |
| tAtmVtlStatsDrpClp0CellsTxd | long | tAtmVtlStatsDrpClp0Cells Txd | The value of tAtmVtlStatsDrpClp0CellsTxd indicates the number of all CLP=0 cells discards of this VTL. This includes both discards due to buffer management and policer. |
| tAtmVtlStatsTagCells | long | tAtmVtlStatsTagCells | The value of tAtmVtlStatsTagCells indicates the number of tagged CLP=0 cells of the VTL. The egress may or may not discard these cells. |
| tAtmVtlStatsTotalBytesRxd | UINT128 | tAtmVtlStatsTotalBytesTx d | The value of tAtmVtlStatsTotalBytesTxd indicates the number of bytes transmitted by this VTL. This is the number of tAtmVtlStatsTotalCellsTxd multiplied by 53. |
| tAtmVtlStatsTotalBytesTxd | UINT128 | tAtmVtlStatsTotalBytesRx d | The value of tAtmVtlStatsTotalBytesRxd indicates the number of bytes received by this VTL. This is the number of tAtmVtlStatsTotalCellsRxd multiplied by 53. |
| tAtmVtlStatsTotalCellsRxd | UINT128 | tAtmVtlStatsTotalCellsRx d | The value of tAtmVtlStatsTotalCellsRxd indicates the number of valid ATM cells received by the VTL including both CLP=0 and CLP=1 cells. If traffic policing is implemented, then cells are counted prior to the application of traffic policing. |
| tAtmVtlStatsTotalCellsTxd | UINT128 | tAtmVtlStatsTotalCellsTx d | The value of tAtmVtlStatsTotalCellsTxd indicates the number of valid ATM cells transmitted by the VTL including both CLP=0 and CLP=1 cells. If traffic policing is implemented, then cells are counted prior to the application of traffic policing. |
| tAtmVtlStatsTotalClp0CellsRxd | UINT128 | tAtmVtlStatsTotalClp0Cel lsRxd | The value of tAtmVtlStatsTotalClp0CellsRxd indicates the number of valid ATM CLP=0 cells received by the VTL. If traffic policing is implemented, then cells are counted prior to the application of traffic policing. |
| tAtmVtlStatsTotalClp0CellsTxd | UINT128 | tAtmVtlStatsTotalClp0Cel lsTxd | The value of tAtmVtlStatsTotalClp0CellsTxd indicates the number of valid ATM CLP=0 cells transmitted by the VTL. If traffic policing is implemented, then cells are counted prior to the application of traffic policing. |
| **IlmiStatistics**<br>MIB table name: TIMETRA-ATM-MIB.tAtmIlmiLinkStatisticsTable<br>Monitored class: atm.IlmiLink | | | |

**(4 of 10)**

| 5620 SAM counter name | Type | MIB counter name | Description |
|---|---|---|---|
| inBadValueErrors | long | tAtmIlmiLinkInBadValueErrors | The value of tAtmIlmiLinkInBadValueErrors indicates the total number SNMP `BadValue' error messages received on this ILMI link. |
| inGeneralErrors | long | tAtmIlmiLinkInGeneralErrors | The value of tAtmIlmiLinkInGeneralErrors indicates the total number SNMP `General' error messages received on this ILMI link. |
| inGetNextRequest | long | tAtmIlmiLinkInGetNextRequestPdus | The value of tAtmIlmiLinkInGetNextRequestPdus indicates the total number 'GetNextRequest' SNMP PDUs received on this ILMI link. |
| inGetRequest | long | tAtmIlmiLinkInGetRequestPdus | The value of tAtmIlmiLinkInGetRequestPdus indicates the total number GetRequest SNMP PDUs received on this ILMI link. |
| inGetResponse | long | tAtmIlmiLinkInGetResponsePdus | The value of tAtmIlmiLinkInGetResponsePdus indicates the total number 'GetResponse' SNMP PDUs received on this ILMI link in response to 'GetRequest', 'GetNextRequest' and 'SetRequests' sent. |
| inNoSuchNameErrors | long | tAtmIlmiLinkInNoSuchNameErrors | The value of tAtmIlmiLinkInNoSuchNameErrors indicates the total number SNMP `NoSuchName' error messages received on this ILMI link. |
| inPdu | long | tAtmIlmiLinkInPdus | The value of tAtmIlmiLinkInPdus indicates the total number SNMP PDUs received on this ILMI link. |
| inReadOnlyErrors | long | tAtmIlmiLinkInReadOnlyErrors | The value of tAtmIlmiLinkInReadOnlyErrors indicates the total number SNMP `ReadOnly' error messages received on this ILMI link. |
| inSetRequestPackets | long | tAtmIlmiLinkInSetRequestPdus | The value of tAtmIlmiLinkInSetRequestPdus indicates the total number 'SetRequest' SNMP PDUs received on this ILMI link. |
| inTooBigErrors | long | tAtmIlmiLinkInTooBigErrors | The value of tAtmIlmiLinkInTooBigErrors indicates the total number SNMP `TooBig' error messages received on this ILMI link. |
| inTraps | long | tAtmIlmiLinkInTrapPdus | The value of tAtmIlmiLinkInTrapPdus indicates the total number Trap SNMP PDUs received on this ILMI link. |
| outBadValueErrors | long | tAtmIlmiLinkOutBadValueErrors | The value of tAtmIlmiLinkOutBadValueErrors indicates the total number SNMP `BadValue' error messages sent on this ILMI link. |
| outGeneralErrors | long | tAtmIlmiLinkOutGeneralErrors | The value of tAtmIlmiLinkOutGeneralErrors indicates the total number SNMP `General' error messages sent on this ILMI link. |

**(5 of 10)**

| 5620 SAM counter name | Type | MIB counter name | Description |
|---|---|---|---|
| outGetNextRequest | long | tAtmIlmiLinkOutGetNext RequestPdus | The value of tAtmIlmiLinkOutGetNextRequestPdus indicates the total number GetNextRequest SNMP PDUs sent on this ILMI link. |
| outGetRequest | long | tAtmIlmiLinkOutGetRequestPdus | The value of tAtmIlmiLinkOutGetRequestPdus indicates the total number GetRequest SNMP PDUs sent on this ILMI link. |
| outGetResponse | long | tAtmIlmiLinkOutGetResponsePdus | The value of tAtmIlmiLinkOutGetResponsePdus indicates the total number GetResponse SNMP PDUs sent on this ILMI link in response to GetRequest, GetNextRequest and 'SetRequests' received. |
| outNoSuchNameErrors | long | tAtmIlmiLinkOutNoSuchNameErrors | The value of tAtmIlmiLinkOutNoSuchNameErrors indicates the total number SNMP `NoSuchName' error messages sent on this ILMI link. |
| outPdu | long | tAtmIlmiLinkOutPdus | The value of tAtmIlmiLinkOutPdus indicates the total number SNMP PDUs sent on this ILMI link. |
| outReadOnlyErrors | long | tAtmIlmiLinkOutReadOnlyErrors | The value of tAtmIlmiLinkOutReadOnlyErrors indicates the total number SNMP `ReadOnly' error messages sent on this ILMI link. |
| outSetRequestPackets | long | tAtmIlmiLinkOutSetRequestPdus | The value of tAtmIlmiLinkOutSetRequestPdus indicates the total number 'SetRequest' SNMP PDUs sent on this ILMI link. |
| outTooBigErrors | long | tAtmIlmiLinkOutTooBigErrors | The value of tAtmIlmiLinkOutTooBigErrors indicates the total number SNMP `TooBig' error messages sent on this ILMI link. |
| outTraps | long | tAtmIlmiLinkOutTrapPdus | The value of tAtmIlmiLinkOutTrapPdus indicates the total number Trap SNMP PDUs sent on this ILMI link. |
| snmpCommStringErrors | long | tAtmIlmiLinkInInvalidSnmpCommunityStringPdus | The value of tAtmIlmiLinkInInvalidSnmpCommunityStringPdus indicates the total number SNMP PDUs received with invalid community string on this ILMI link. |
| snmpFormatErrors | long | tAtmIlmiLinkInInvalidSnmpFormatPdus | The value of tAtmIlmiLinkInInvalidSnmpFormatPdus indicates the total number SNMP PDUs received with invalid ASN.1 format on this ILMI link. |
| snmpVersionErrors | long | tAtmIlmiLinkInInvalidSnmpVersionPdus | The value of tAtmIlmiLinkInInvalidSnmpVersionPdus indicates the total number SNMP PDUs received with invalid version on this ILMI link. |
| **InterfaceAal5Stats**<br>MIB table name: TIMETRA-ATM-MIB.tAtmIntfAal5StatsTable<br>Monitored class: atm.Interface | | | |

**(6 of 10)**

| 5620 SAM counter name | Type | MIB counter name | Description |
|---|---|---|---|
| tAtmInterfaceAal5StatsTotalCrc32Errors | UINT128 | tAtmIntfAal5StatsTotalCrc32Err | The value of tAtmIntfAal5StatsTotalCrc32Err indicates the number of Errors detected by the 32 bit cyclic redundancy check. |
| tAtmInterfaceAal5StatsTotalPktsDroppedRxd | UINT128 | tAtmIntfAal5StatsTotalPktsDrpRxd | The value of tAtmIntfAal5StatsTotalPktsDrpRxd indicates the number of AAL5 PDUs dropped by the ATM interface in the receive direction. This count does not include crc32 Errors or oversized SDU discards. |
| tAtmInterfaceAal5StatsTotalPktsDroppedTxd | UINT128 | tAtmIntfAal5StatsTotalPktsDrpTxd | The value of tAtmIntfAal5StatsTotalPktsDrpTxd indicates the number of AAL5 PDUs dropped in the transmit direction. This count does not include crc32 Errors or oversized SDU discards. |
| tAtmInterfaceAal5StatsTotalPktsRxd | UINT128 | tAtmIntfAal5StatsTotalPktsRxd | The value of tAtmIntfAal5StatsTotalPktsRxd indicates the number of AAL5 PDUs that are received by the ATM interface. |
| tAtmInterfaceAal5StatsTotalPktsTxd | UINT128 | tAtmIntfAal5StatsTotalPktsTxd | The value of tAtmIntfAal5StatsTotalPktsTxd indicates the number of AAL5 PDUs that are transmitted by the ATM interface. |
| **InterfaceStats**<br>MIB table name: TIMETRA-ATM-MIB.tAtmIntfStatsTable<br>Monitored class: atm.Interface | | | |
| tAtmInterfaceStatsTotalBytesRxd | UINT128 | tAtmIntfStatsTotalBytesRxd | The value of tAtmIntfStatsTotalBytesRxd indicates the number of bytes received on this interface. This is the number of tAtmIntfStatsTotalCellsRxd multiplied by 53. |
| tAtmInterfaceStatsTotalBytesTxd | UINT128 | tAtmIntfStatsTotalBytesTxd | The value of tAtmIntfStatsTotalBytesTxd indicates the number of bytes transmitted on this interface. This is the number of tAtmIntfStatsTotalCellsTxd multiplied by 53. |
| tAtmInterfaceStatsTotalCellsRxd | UINT128 | tAtmIntfStatsTotalCellsRxd | The value of tAtmIntfStatsTotalCellsRxd indicates the number of valid ATM cells received by the ATM interface including both CLP=0 and CLP=1 cells. If traffic policing is implemented, then cells are counted prior to the application of traffic policing. |
| tAtmInterfaceStatsTotalCellsTxd | UINT128 | tAtmIntfStatsTotalCellsTxd | The value of tAtmIntfStatsTotalCellsTxd indicates the number of valid ATM cells transmitted by the ATM interface including both CLP=0 and CLP=1 cells. |
| tAtmInterfaceStatsTotalUnknownCellsDropped | long | tAtmIntfStatsTotalUnknCellsDrp | The value of tAtmIntfStatsTotalUnknCellsDrp indicates the number of cells dropped due to an unknown VPI/VCI. |

**(7 of 10)**

| 5620 SAM counter name | Type | MIB counter name | Description |
|---|---|---|---|
| **PvcConnectionAal5PerformanceStats**<br>MIB table name: ATM-MIB.aal5VccTable<br>Monitored class: atm.PvcConnection | | | |
| aal5CrcErrors | long | aal5VccCrcErrors | The number of AAL5 CPCS PDUs received with CRC-32 errors on this AAL5 VCC at the interface associated with an AAL5 entity. |
| aal5OverSizedSDUs | long | aal5VccOverSizedSDUs | The number of AAL5 CPCS PDUs discarded on this AAL5 VCC at the interface associated with an AAL5 entity because the AAL5 SDUs were too large. |
| aal5SarTimeOuts | long | aal5VccSarTimeOuts | The number of partially re-assembled AAL5 CPCS PDUs which were discarded on this AAL5 VCC at the interface associated with an AAL5 entity because they were not fully re-assembled within the required time period. If the re-assembly timer is not supported, then this object contains a zero value. |
| **PvcConnectionAal5Stats**<br>MIB table name: TIMETRA-ATM-MIB.tAal5VccStatisticsTable<br>Monitored class: atm.PvcConnection | | | |
| aal5DroppedPacketsRxd | UINT128 | tAal5VccStatsDrpPackets Rxd | The value of tAal5VccStatsDrpPacketsRxd indicates the number of dropped AAL-5 SDUs that have been received on the AAL-5 VCC. |
| aal5DroppedPacketsTxd | UINT128 | tAal5VccStatsDrpPackets Txd | The value of tAal5VccStatsDrpPacketsTxd indicates the number of dropped AAL-5 SDUs that would have been transmitted on the AAL-5 VCC. |
| aal5PacketsRxd | UINT128 | tAal5VccStatsPacketsRxd | The value of tAal5VccStatsPacketsRxd indicates the number of valid AAL-5 SDUs and AAL-5 SDUs with CRC-32 errors received by the AAL-5 VCC. |
| aal5PacketsTxd | UINT128 | tAal5VccStatsPacketsTxd | The value of tAal5VccStatsPacketsTxd indicates the number of AAL-5 SDUs transmitted by the AAL-5 VCC. |
| **PvcConnectionOamStats**<br>MIB table name: TIMETRA-ATM-MIB.tAtmOamVclStatisticsTable<br>Monitored class: atm.PvcConnection | | | |
| oamAISCellsRxd | long | tAtmOamVclStatsAISCells Rxd | The value of tAtmOamVclStatsAISCellsRxd indicates the number of AIS cells received on this VC for both end to end and segment. |
| oamAISCellsTxd | long | tAtmOamVclStatsAISCells Txd | The value of tAtmOamVclStatsAISCellsTxd indicates the number of AIS cells transmitted on this VC for both end to end and segment. |
| oamCrc10Errors | long | tAtmOamVclStatsCrc10Er r | The value of tAtmOamVclStatsCrc10Err indicates the number of oam cells discarded with CRC 10 Errors. |

**(8 of 10)**

| 5620 SAM counter name | Type | MIB counter name | Description |
|---|---|---|---|
| oamLoopbackCellsRxd | long | tAtmOamVclStatsLoopbackCellsRxd | The value of tAtmOamVclStatsLoopbackCellsRxd indicates the number of loopback requests and responses received on this VC for both end to end and segment. |
| oamLoopbackCellsTxd | long | tAtmOamVclStatsLoopbackCellsTxd | The value of tAtmOamVclStatsLoopbackCellsTxd indicates the number of loopback requests and responses transmitted on this VC for both end to end and segment. |
| oamOtherCellsRxd | long | tAtmOamVclStatsOtherCellsRxd | This value of tAtmOamVclStatsOtherCellsRxd indicates the number of oam cells that are received but not identified. |
| oamRDICellsRxd | long | tAtmOamVclStatsRDICellsRxd | The value of tAtmOamVclStatsRDICellsRxd indicates the number of RDI cells received on this VC for both end to end and segment. |
| oamRDICellsTxd | long | tAtmOamVclStatsRDICellsTxd | The value of tAtmOamVclStatsRDICellsTxd indicates the number of RDI cells transmitted on this VC for both end to end and segment. |
| **PvcConnectionStats**<br>MIB table name: TIMETRA-ATM-MIB.tAtmVclStatisticsTable<br>Monitored class: atm.PvcConnection | | | |
| totalBytesRxd | UINT128 | tAtmVclStatsTotalBytesRxd | The value of tAtmVclStatsTotalBytesRxd indicates the number of bytes received by this Vcl. This is the number of tAtmVclStatsTotalCellsRxd multiplied by 53. |
| totalBytesTxd | UINT128 | tAtmVclStatsTotalBytesTxd | The value of tAtmVclStatsTotalBytesTxd indicates the number of bytes transmitted by this Vcl. This is the number of tAtmVclStatsTotalCellsTxd multiplied by 53. |
| totalPacketsRxd | UINT128 | tAtmVclStatsTotalCellsRxd | The value of tAtmVclStatsTotalCellsRxd indicates the number of valid ATM cells received by the VCL including both CLP=0 and CLP=1 cells. If traffic policing is implemented, then cells are counted prior to the application of traffic policing. |
| totalPacketsTxd | UINT128 | tAtmVclStatsTotalCellsTxd | The value of tAtmVclStatsTotalCellsTxd indicates the number of valid ATM cells transmitted by the VCL including both CLP=0 and CLP=1 cells. If traffic policing is implemented, then cells are counted prior to the application of traffic policing. |
| **TCStats**<br>MIB table name: ATM-MIB.atmInterfaceTCTable<br>Monitored class: atm.Interface | | | |

**(9 of 10)**

| 5620 SAM counter name | Type | MIB counter name | Description |
|---|---|---|---|
| ocdEvents | long | atmInterfaceOCDEvents | The number of times the Out of Cell Delineation (OCD) events occur. If seven consecutive ATM cells have Header Error Control (HEC) violations, an OCD event occurs. A high number of OCD events may indicate a problem with the TC Sublayer. |
| **TCSubLayerStats**<br>MIB table name: TIMETRA-ATM-MIB.tAtmTCSublayerTable<br>Monitored class: atm.Interface | | | |
| hecErrors | long | tAtmTCSublayerHecErrors | The value of tAtmTCSublayerHecErrors indicates the number of cells with uncorrectable HEC Errors on this interface. |
| hecErrorsFixed | long | tAtmTCSublayerHecErrorsFixed | The value of tAtmTCSublayerHecErrorsFixed indicates the number of cells with correctable HEC Errors on this interface. |

**(10 of 10)**

### Table A-7 bgp statistics

| 5620 SAM counter name | Type | MIB counter name | Description |
|---|---|---|---|
| **PeerAdditionalStats**<br>MIB table name: BGP4-MIB.bgpPeerTable<br>Monitored class: bgp.Peer | | | |
| fsmEstablishedTime | long | bgpPeerFsmEstablishedTime | This timer indicates how long (in seconds) this peer has been in the Established state or how long since this peer was last in the Established state. It is set to zero when a new peer is configured or the router is booted. |
| **PeerStats**<br>MIB table name: TIMETRA-BGP-MIB.tBgpPeerNgOperTable<br>Monitored class: bgp.Peer | | | |
| flaps | long | tBgpPeerNgOperFlaps | tBgpPeerNgOperFlaps indicates the number of flaps of updates from this peer. |
| inputQueueMessages | long | tBgpPeerNgOperInputQueueMsgs | tBgpPeerNgOperInputQueueMsgs indicates the number of unprocessed messages in the queue, from this peer. |
| lastEvent | long | tBgpPeerNgOperLastEvent | tBgpPeerNgOperLastEvent indicates the last BGP event of this peer. |
| lastRestartTime | long | tBgpPeerNgOperLastRestartTime | tBgpPeerNgOperLastRestartTime indicates the last time the peer attempted restart. |
| lastState | long | tBgpPeerNgOperLastState | tBgpPeerNgOperLastState indicates the last BGP state of this peer. |
| mcastActivePrefixes | long | tBgpPeerNgOperMCastV4ActivePfxs | The value of tBgpPeerNgOperMCastV4ActivePfxs indicates the number of active IPv4 multicast prefixes from this peer. |

**(1 of 4)**

| 5620 SAM counter name | Type | MIB counter name | Description |
|---|---|---|---|
| mcastPrefixesSuppressedByDamping | long | tBgpPeerNgOperMCastV4SuppPfxDamp | The value of tBgpPeerNgOperMCastV4SuppPfxDamp indicates the number of IPv4 multicast prefixes from this peer, which have been suppressed by damping. |
| mcastReceivedPrefixes | long | tBgpPeerNgOperMCastV4RecvPfxs | The value of tBgpPeerNgOperMCastV4RecvPfxs indicates the number of IPv4 multicast prefixes received from this peer. |
| mcastSentPrefixes | long | tBgpPeerNgOperMCastV4SentPfxs | The value of tBgpPeerNgOperMCastV4SentPfxs indicates the number of IPv4 multicast prefixes transmitted to this peer. |
| mdtSafiActivePrefixes | long | tBgpPeerNgOperMdtSafiActivePfxs | The value of tBgpPeerNgOperMdtSafiActivePfxs indicates the number of active MDT-SAFI prefixes from this peer. |
| mdtSafiPrefixesSuppressedByDamping | long | tBgpPeerNgOperMdtSafiSuppPfxDamp | The value of tBgpPeerNgOperMdtSafiSuppPfxDamp indicates the number of MDT-SAFI prefixes from this peer, which have been suppressed by damping. |
| mdtSafiReceivedPrefixes | long | tBgpPeerNgOperMdtSafiRecvPfxs | The value of tBgpPeerNgOperMdtSafiRecvPfxs indicates the number of MDT-SAFI prefixes received from this peer. |
| mdtSafiSentPrefixes | long | tBgpPeerNgOperMdtSafiSentPfxs | The value of tBgpPeerNgOperMdtSafiSentPfxs indicates the number of MDT-SAFI prefixes transmitted to this peer. |
| messageOctetsReceived | UINT128 | tBgpPeerNgOperMsgOctetsRcvd | tBgpPeerNgOperMsgOctetsRcvd indicates the number of octets received from this peer. |
| messageOctetsSent | UINT128 | tBgpPeerNgOperMsgOctetsSent | tBgpPeerNgOperMsgOctetsSent indicates the number of octets transmitted to this peer. |
| numberOfRestarts | long | tBgpPeerNgOperNumRestarts | tBgpPeerNgOperNumRestarts indicates the number of times the peer has attempted restart. |
| outputQueueMessages | long | tBgpPeerNgOperOutputQueueMsgs | tBgpPeerNgOperOutputQueueMsgs indicates the number of untransmitted messages in the queue, to this peer. |
| pathsReceived | long | tBgpPeerNgOperReceivedPaths | tBgpPeerNgOperReceivedPaths indicates the number of paths received from this peer. |
| prefixesActive | long | tBgpPeerNgOperActivePrefixes | tBgpPeerNgOperActivePrefixes indicates the number of active IPv4 prefixes from this peer. |
| prefixesReceived | long | tBgpPeerNgOperReceivedPrefixes | tBgpPeerNgOperReceivedPrefixes indicates the number of IPv4 prefixes received from this peer. |
| prefixesSent | long | tBgpPeerNgOperSentPrefixes | tBgpPeerNgOperSentPrefixes indicates the number of IPv4 prefixes transmitted to this peer. |

**(2 of 4)**

| 5620 SAM counter name | Type | MIB counter name | Description |
|---|---|---|---|
| prefixesSuppressedByDamping | long | tBgpPeerNgOperV4SuppPfxDamp | The value of tBgpPeerNgOperV4SuppPfxDamp indicates the number of IPv6 prefixes from this peer, which have been suppressed by damping. |
| v6ActivePrefixes | long | tBgpPeerNgOperV6ActivePrefixes | The value of tBgpPeerNgOperV6ActivePrefixes indicates the number of active IPv6 prefixes from this peer. |
| v6PrefixesSuppressedByDamping | long | tBgpPeerNgOperV6SuppPfxDamp | The value of tBgpPeerNgOperV6SuppPfxDamp indicates the number of IPv6 prefixes from this peer, which have been suppressed by damping. |
| v6ReceivedPrefixes | long | tBgpPeerNgOperV6ReceivedPrefixes | The value of tBgpPeerNgOperV6ReceivedPrefixes indicates the number of IPv6 prefixes received from this peer. |
| v6SentPrefixes | long | tBgpPeerNgOperV6SentPrefixes | The value of tBgpPeerNgOperV6SentPrefixes indicates the number of IPv6 prefixes transmitted to this peer. |
| vpnActivePrefixes | long | tBgpPeerNgOperVpnActivePrefixes | tBgpPeerNgOperVpnActivePrefixes indicates the number of active VPN IPv4 prefixes from this BGP peer. |
| vpnPrefixesSuppressedByDamping | long | tBgpPeerNgOperVpnSuppPfxDamp | The value of tBgpPeerNgOperVpnSuppPfxDamp indicates the number of VPN IPv4 prefixes from this peer, which have been suppressed by damping. |
| vpnReceivedPrefixes | long | tBgpPeerNgOperVpnRecvPrefixes | tBgpPeerNgOperVpnRecvPrefixes indicates the number of received VPN IPv4 prefixes. |
| vpnSentPrefixes | long | tBgpPeerNgOperVpnSentPrefixes | tBgpPeerNgOperVpnSentPrefixes indicates the number of transmitted VPN IPv4 prefixes. |
| **PeerVprnIpv6Stats**<br>MIB table name: TIMETRA-BGP-MIB.tBgpPeerNgOperTable<br>Monitored class: bgp.Peer | | | |
| vpnIpv6ActivePfxs | long | tBgpPeerNgOperVpnIpv6ActivePfxs | The value of tBgpPeerNgOperVpnIpv6ActivePfxs indicates the number of active VPN IPv6 prefixes from this peer. |
| vpnIpv6RecvPfxs | long | tBgpPeerNgOperVpnIpv6RecvPfxs | The value of tBgpPeerNgOperVpnIpv6RecvPfxs indicates the number of VPN IPv6 prefixes received from this peer. |
| vpnIpv6SentPfxs | long | tBgpPeerNgOperVpnIpv6SentPfxs | The value of tBgpPeerNgOperVpnIpv6SentPfxs indicates the number of VPN IPv6 prefixes transmitted to this peer. |

**(3 of 4)**

| 5620 SAM counter name | Type | MIB counter name | Description |
|---|---|---|---|
| vpnIpv6SuppPfxDamp | long | tBgpPeerNgOperVpnIpv6SuppPfxDamp | The value of tBgpPeerNgOperVpnIpv6SuppPfxDamp indicates the number of VPN IPv6 prefixes from this peer, which have been suppressed by damping. |

**(4 of 4)**

### Table A-8 bundle statistics

| 5620 SAM counter name | Type | MIB counter name | Description |
|---|---|---|---|
| **BundleStats**<br>MIB table name: TIMETRA-PORT-MIB.tmnxBundleTable<br>Monitored class: bundle.Interface | | | |
| inputDiscards | long | tmnxBundleInputDiscards | tmnxBundleInputDiscards indicates the number of LCP packets that were discarded. This object is only supported for a tmnxBundleType value of mlppp. |
| upTime | long | tmnxBundleUpTime | tmnxBundleUpTime indicates the time since the bundle is operationally 'inService'. |
| **MultiClassMlpppStats**<br>MIB table name: TIMETRA-PORT-MIB.tmnxMcMlpppStatsTable<br>Monitored class: bundle.MultiClassMlpppSpecifics | | | |
| mcMlpppStatsEgressErrPkt | long | tmnxMcMlpppStatsEgressErrPkt | The value of tmnxMcMlpppStatsEgressErrPkt indicates the total number of packets discarded due to segmentation errors on the bundle for the given class on egress. |
| mcMlpppStatsEgressOct | long | tmnxMcMlpppStatsEgressOct | The value of tmnxMcMlpppStatsEgressOct indicates the total number of octets in all packets received on the bundle for the given class on egress before segmentation. |
| mcMlpppStatsEgressPkt | long | tmnxMcMlpppStatsEgressPkt | The value of tmnxMcMlpppStatsEgressPkt indicates the total number of packets forwarded on the bundle for the given class on egress towards the line. |
| mcMlpppStatsIngressErrPkt | long | tmnxMcMlpppStatsIngressErrPkt | The value of tmnxMcMlpppStatsIngressErrPkt indicates the total number of packets discarded due to reassembly errors on the bundle for the given class on ingress. |
| mcMlpppStatsIngressOct | long | tmnxMcMlpppStatsIngressOct | The value of tmnxMcMlpppStatsIngressOct indicates the total number of octets in all packets received on the bundle for the given class on ingress before reassembly. |
| mcMlpppStatsIngressPkt | long | tmnxMcMlpppStatsIngressPkt | The value of tmnxMcMlpppStatsIngressPkt indicates the total number of packets forwarded on the bundle for the given class on ingress towards higher layer protocols. |

**Table A-9 cflowd statistics**

| 5620 SAM counter name | Type | MIB counter name | Description |
|---|---|---|---|
| **AAGroupCflowdStats**<br>MIB table name: TIMETRA-BSX-NG-MIB.tmnxBsxCflowdStatusTable<br>Monitored class: cflowd.AAGroupCflowd | | | |
| activeFlowCurrent | long | tmnxBsxCflowdStatusActFlowsCurr | The value of tmnxBsxCflowdStatusActFlowsCurr indicates the number of active flows currently marked for export using Cflowd in the ISA-AA MDA(s). |
| activeRateCurrent | long | tmnxBsxCflowdStatusRecRateCurr | The value of tmnxBsxCflowdStatusRecRateCurr indicates the number of flow records per second being exported using Cflowd from the ISA-AA MDA(s). The calculation is based on the number of flow records inserted into Cflowd packets within the last 10 seconds. |
| discontinueTime | long | tmnxBsxCflowdStatusDiscontTime | The value of tmnxBsxCflowdStatusDiscontTime indicates the SNMPv2-MIB::sysUpTime (hundredths of a second) when the ISA-AA MDA within the group has last changed status. |
| expType | int | tmnxBsxCflowdExpType | The value of tmnxBsxCflowdExpType specifies the type of the Application Assurance statistic exported using Cflowd. |
| flowExported | long | tmnxBsxCflowdStatusFlowsNoRes | The value of tmnxBsxCflowdStatusFlowsNoRes indicates the total number of flows that were selected for export but failed to obtain Cflows resources in the ISA-AA MDA(s). |
| hcFlowExported | UINT128 | tmnxBsxCflowdStatusHCFlowsNoRes | The value of tmnxBsxCflowdStatusHCFlowsNoRes indicates the total number of flows that were selected for export but failed to obtain Cflows resources in the ISA-AA MDA(s). This object is the 64-bit version of tmnxBsxCflowdStatusFlowsNoRes. |
| hcPacketsSent | UINT128 | tmnxBsxCflowdStatusHCPktsSent | The value of tmnxBsxCflowdStatusHCPktsSent indicates the total number of Cflowd packets sent from the ISA-AA MDA(s). This object is the 64-bit version of tmnxBsxCflowdStatusPktsSent. |
| hcRecDropped | UINT128 | tmnxBsxCflowdStatusHCRecDropped | The value of tmnxBsxCflowdStatusHCRecDropped indicates the total number of flow records dropped in the ISA-AA MDA(s). This object is the 64-bit version of tmnxBsxCflowdStatusRecDropped. |

**(1 of 5)**

| 5620 SAM counter name | Type | MIB counter name | Description |
|---|---|---|---|
| hcRecReported | UINT128 | tmnxBsxCflowdStatusHCRecReported | The value of tmnxBsxCflowdStatusHCRecReported indicates the total number of flow records reported from the ISA-AA MDA(s). This object is the 64-bit version of tmnxBsxCflowdStatusRecReported. |
| packetRateCurrent | long | tmnxBsxCflowdStatusPktRateCurr | The value of tmnxBsxCflowdStatusPktRateCurr indicates the number of Cflowd packets per second being exported from the ISA-AA MDA(s). The calculation is based on the number of Cflowd packets generated within the last 10 seconds. |
| packetsSent | long | tmnxBsxCflowdStatusPktsSent | The value of tmnxBsxCflowdStatusPktsSent indicates the total number of Cflowd packets sent from the ISA-AA MDA(s). |
| recDropped | long | tmnxBsxCflowdStatusRecDropped | The value of tmnxBsxCflowdStatusRecDropped indicates the total number of flow records dropped in the ISA-AA MDA(s). |
| recReported | long | tmnxBsxCflowdStatusRecReported | The value of tmnxBsxCflowdStatusRecReported indicates the total number of flow records reported from the ISA-AA MDA(s). |
| **AAGroupCollectorStats**<br>MIB table name: TIMETRA-BSX-NG-MIB.tmnxBsxCflowdCollStatTable<br>Monitored class: cflowd.AAGroupCollector | | | |
| discontinueTime | long | tmnxBsxCflowdCollStatDiscontTime | The value of tmnxBsxCflowdCollStatDiscontTime indicates the SNMPv2-MIB::sysUpTime (hundredths of a second) when the Cflowd collector has last changed status. |
| hcRecordSent | UINT128 | tmnxBsxCflowdCollStatHCRecSent | The value of tmnxBsxCflowdCollStatHCRecSent indicates the total number of flow records sent to the remote Cflowd collector. This object is the 64-bit version of tmnxBsxCflowdCollStatRecSent. |
| recordSent | long | tmnxBsxCflowdCollStatRecSent | The value of tmnxBsxCflowdCollStatRecSent indicates the total number of flow records sent to the remote Cflowd collector. |
| **CflowdPerfExpStats**<br>MIB table name: TIMETRA-BSX-NG-MIB.tmnxBsxCflowdExpStatTable<br>Monitored class: cflowd.AAGroupCflowd | | | |
| discontinueTime | long | tmnxBsxCflowdExpStatDiscontTime | The value of tmnxBsxCflowdExpStatDiscontTime indicates the SNMPv2-MIB::sysUpTime (hundredths of a second) when the export of cflowd records has last changed status. |
| expType | int | tmnxBsxCflowdExpType | The value of tmnxBsxCflowdExpType specifies the type of the Application Assurance statistic exported using Cflowd. |

**(2 of 5)**

| 5620 SAM counter name | Type | MIB counter name | Description |
|---|---|---|---|
| flowExported | long | tmnxBsxCflowdExpStatFlowsNoRes | The value of tmnxBsxCflowdExpStatFlowsNoRes indicates the total number of flows that were selected for export but failed to obtain Cflowd resources. |
| hcFlowExported | UINT128 | tmnxBsxCflowdExpStatHCFlowsNoRes | The value of tmnxBsxCflowdExpStatHCFlowsNoRes indicates the total number of flows that were selected for export but failed to obtain Cflowd resources. This object is the 64-bit version of tmnxBsxCflowdExpStatFlowsNoRes. |
| hcRecDropped | UINT128 | tmnxBsxCflowdExpStatHCRecDropped | The value of tmnxBsxCflowdExpStatHCRecDropped indicates the total number of Cflowd flow records dropped. This object is the 64-bit version of tmnxBsxCflowdExpStatRecDropped. |
| hcRecReport | UINT128 | tmnxBsxCflowdExpStatHCRecReport | The value of tmnxBsxCflowdExpStatHCRecReport indicates the total number of flow records reported. This object is the 64-bit version of tmnxBsxCflowdExpStatRecReport. |
| recDropped | long | tmnxBsxCflowdExpStatRecDropped | The value of tmnxBsxCflowdExpStatRecDropped indicates the total number of flow records dropped. |
| recReport | long | tmnxBsxCflowdExpStatRecReport | The value of tmnxBsxCflowdExpStatRecReport indicates the total number of flow records reported. |
| **NeCflowdStats**<br>MIB table name: TIMETRA-CFLOWD-MIB.tmnxCflowdVersionStatsTable<br>Monitored class: cflowd.NeCollector | | | |
| packetErrors | long | tmnxCflowdVersionErrors | The value of tmnxCflowdVersionErrors indicates the number of errored packets for the specified version. |
| packetsOpen | long | tmnxCflowdVersionOpen | The value of tmnxCflowdVersionOpen indicates the number of open packets pending for the specified version. |
| packetsSent | long | tmnxCflowdVersionSent | The value of tmnxCflowdVersionSent indicates the number of packets transmitted for the specified version. |
| version | long | tmnxCflowdVersionIndex | The value of tmnxCflowdVersionIndex specifies the row in the tmnxCflowdVersionStatsTable that pertains to the cflowd collector version. |
| versionStatus | int | tmnxCflowdVersionStatus | The value of tmnxCflowdVersionStatus indicates whether or not the version is in use in the system. |
| **NeCollectorV5Stats**<br>MIB table name: TIMETRA-CFLOWD-MIB.tmnxCflowdV5StatsTable<br>Monitored class: cflowd.NeCollector | | | |

**(3 of 5)**

| 5620 SAM counter name | Type | MIB counter name | Description |
|---|---|---|---|
| v5PacketErrors | long | tmnxCflowdV5Errors | The value of tmnxCflowdV5Errors indicates the number of errored packets for the specified remote collector host. |
| v5PacketOpen | long | tmnxCflowdV5Open | The value of tmnxCflowdV5Open indicates the number of open packets pending for the specified remote collector host. |
| v5PacketSent | long | tmnxCflowdV5Sent | The value of tmnxCflowdV5Sent indicates the number of packets transmitted for the specified remote collector host. |
| **NeCollectorV8Stats**<br>MIB table name: TIMETRA-CFLOWD-MIB.tmnxCflowdAggregationStatsTable<br>Monitored class: cflowd.NeCollector | | | |
| aggPacketErrors | long | tmnxCflowdAggregationErrors | The value of tmnxCflowdAggregationErrors indicates the number of errored packets for the specified aggregation type. |
| aggPacketOpen | long | tmnxCflowdAggregationOpen | The value of tmnxCflowdAggregationOpen indicates the number of open packets pending for the specified aggregation type. |
| aggPacketSent | long | tmnxCflowdAggregationSent | The value of tmnxCflowdAggregationSent indicates the number of packets transmitted for the specified aggregation type. |
| aggregationIndex | int | tmnxCflowdAggregationIndex | The value of tmnxCflowdAggregationIndex specifies the row in the tmnxCflowdAggregationStatsTable that pertains to the cflowd collector aggregation type. |
| aggregationStatus | int | tmnxCflowdAggregationStatus | The value of tmnxCflowdAggregationStatus indicates whether or not the aggregation is in use in the remote collector host entry. |
| **NeCollectorV9Stats**<br>MIB table name: TIMETRA-CFLOWD-MIB.tmnxCflowdTemplateStatsTable<br>Monitored class: cflowd.NeCollector | | | |
| templateErrors | long | tmnxCflowdTemplateErrors | The value of tmnxCflowdTemplateErrors indicates the number of errored packets for the specified Template type. |
| templateFlowIndex | int | tmnxCflowdTemplateFlowIndex | The value of tmnxCflowdTemplateFlowIndex specifies the row in the tmnxCflowdTemplateStatsTable that pertains to the cflowd collector Template type. |
| templateOpen | long | tmnxCflowdTemplateOpen | The value of tmnxCflowdTemplateOpen indicates the number of open packets pending for the specified Template type. |

**(4 of 5)**

| 5620 SAM counter name | Type | MIB counter name | Description |
|---|---|---|---|
| templateSent | long | tmnxCflowdTemplateSent | The value of tmnxCflowdTemplateSent indicates the number of packets transmitted for the specified Template type. |
| transmitTime | long | tmnxCflowdTemplateLastTxTime | The value of tmnxCflowdTemplateLastTxTime indicates the time, since system startup, when the specified template was last transmitted. |

**(5 of 5)**

### Table A-10 dhcp statistics

| 5620 SAM counter name | Type | MIB counter name | Description |
|---|---|---|---|
| **LocalDhcpServerFailoverStats**<br>MIB table name: TIMETRA-DHCP-SERVER-MIB.tmnxDhcpsFoStatsTable<br>Monitored class: dhcp.LocalDhcpServerFailover | | | |
| addressConflictPkts | UINT128 | tmnxDhcpsFoStatsAddressConflict | The value of tmnxDhcpsFoStatsAddressConflict indicates how many BNDUPD 'add' packets were dropped because this DHCP server instance has already leased another address to this host. |
| dropInvalidPkts | UINT128 | tmnxDhcpsFoStatsDropInvalidPkts | The value of tmnxDhcpsFoStatsDropInvalidPkts indicates how many BNDUPD packets were dropped because the packet was malformed. |
| hostConflictPkts | UINT128 | tmnxDhcpsFoStatsHostConflict | The value of tmnxDhcpsFoStatsHostConflict indicates how many BNDUPD 'add' packets were dropped because this DHCP server instance has already leased this address to another host. |
| leaseExpiredPkts | UINT128 | tmnxDhcpsFoStatsExpired | The value of tmnxDhcpsFoStatsExpired indicates how many BNDUPD 'add' packets were dropped because the corresponding lease has expired. This may indicate that the clock of the failover peer is not in sync with the clock of this system. |
| leaseNotFoundPkts | UINT128 | tmnxDhcpsFoStatsLeaseNotFound | The value of tmnxDhcpsFoStatsLeaseNotFound indicates how many Binding Database Update (BNDUPD) 'remove' packets were dropped because the corresponding lease could not be found. |
| maxLeasePkts | UINT128 | tmnxDhcpsFoStatsMaxReached | The value of tmnxDhcpsFoStatsMaxReached indicates how many BNDUPD 'add' packets were dropped because the maximum number of leases was reached. The maximum number of leases is indicated by the value of the object tmnxDhcpSvrMaxLeases. |

**(1 of 5)**

| 5620 SAM counter name | Type | MIB counter name | Description |
|---|---|---|---|
| peerConflictPkts | UINT128 | tmnxDhcpsFoStatsPeerConflict | The value of tmnxDhcpsFoStatsPeerConflict indicates how many BNDUPD 'add' packets were dropped because the failover peer has leased an address within a subnet range of which the failover control is set to 'local' on this local DHCP server instance. |
| rangeNotFoundPkts | UINT128 | tmnxDhcpsFoStatsRangeNotFound | The value of tmnxDhcpsFoStatsSubnetNotFound indicates how many BNDUPD 'add' packets were dropped because a valid include range could not be found for the lease. |
| shutdownPkts | UINT128 | tmnxDhcpsFoStatsFoShutdown | The value of tmnxDhcpsFoStatsFoShutdown indicates how many BNDUPD packets were dropped because the failover state if the DHCP Server instance is 'shutdown'. |
| subnetNotFoundPkts | UINT128 | tmnxDhcpsFoStatsSubnetNotFound | The value of tmnxDhcpsFoStatsSubnetNotFound indicates how many BNDUPD 'add' packets were dropped because a valid subnet could not be found for the lease. |
| **LocalDhcpServerStats**<br>MIB table name: TIMETRA-DHCP-SERVER-MIB.tmnxDhcpServerStatsTable<br>Monitored class: dhcp.LocalDhcpServer | | | |
| addressUnavailableDropped | long | tmnxDhcpSvrStatsDropAddrUnavail | The value of tmnxDhcpSvrStatsDropAddrUnavail indicates the number of DHCP requests dropped by the server instance because the requested address is not available. |
| corruptedPacketsDropped | long | tmnxDhcpSvrStatsDropBadPackets | The value of tmnxDhcpSvrStatsDropBadPackets indicates the number of DHCP packets received which were corrupt. |
| destinedToOtherDropped | long | tmnxDhcpSvrStatsDropDestOther | The value of tmnxDhcpSvrStatsDropDestOther indicates the number of DHCP requests dropped by the server instance because the (broadcast) request was not destined to this server. |
| genericErrorDropped | long | tmnxDhcpSvrStatsDropGenError | The value of tmnxDhcpSvrStatsDropGenError indicates the number of DHCP packets dropped by the server instance because of a generic error. |
| invalidMessageTypesDropped | long | tmnxDhcpSvrStatsDropInvalidTypes | The value of tmnxDhcpSvrStatsDropInvalidTypes indicates the number of DHCP packets received which had an invalid message type (option 53). |

**(2 of 5)**

| 5620 SAM counter name | Type | MIB counter name | Description |
|---|---|---|---|
| invalidUserDropped | long | tmnxDhcpSvrStatsDropInvalidUsr | The value of tmnxDhcpSvrStatsDropInvalidUsr indicates the number of DHCP packets dropped by the server instance because the MAC address of the sender or the option 82 didn't match the host lease state. |
| leaseNotFoundDropped | long | tmnxDhcpSvrStatsDropNoLeaseFound | The value of tmnxDhcpSvrStatsDropNoLeaseFound indicates the number of DHCP packets dropped by the server instance because no (valid) lease was found. |
| leaseNotReadyDropped | long | tmnxDhcpSvrStatsDropLseNotReady | The value of tmnxDhcpSvrStatsDropLseNotReady indicates the number of DHCP packets dropped by the server instance before the lease database was ready. |
| leasesExpired | long | tmnxDhcpSvrStatsLeasesExpired | The value of tmnxDhcpSvrStatsLeasesExpired indicates the number of DHCP leases that were expired (because no release was received). |
| localUserDbNotFoundDropped | long | tmnxDhcpSvrStatsDropNoUsrDbFound | The value of tmnxDhcpSvrStatsDropNoUsrDbFound indicates the number of DHCP packets dropped because the value of the object tmnxDhcpServerCfgUserDatabase of this server instance is not equal to the default value and a local user database with that name could not be found. |
| noFreeAddressesInPoolDropped | long | tmnxDhcpSvrStatsDropNotSrvngPool | The value of tmnxDhcpSvrStatsDropNotSrvngPool indicates the number of DHCP packets dropped by the server instance because there were no more free addresses in the pool. |
| offersIgnored | long | tmnxDhcpSvrStatsOffersIgnore | The value of tmnxDhcpSvrStatsOffersIgnore indicates the number of DHCPOFFER (option 52 with value 2) packets sent by the DHCP server instance that were ignored by he clients. |
| overloadDropped | long | tmnxDhcpSvrStatsDropOverload | The value of tmnxDhcpSvrStatsDropOverload indicates the number of DHCP packets dropped by the server instance because they were received in excess of what the server instance can handle. |
| persistenceOverloadDropped | long | tmnxDhcpSvrStatsDropPersOverload | The value of tmnxDhcpSvrStatsDropPersOverload indicates the number of DHCP packets dropped by the server instance because they were received in excess of what the DHCP persistence system can handle. If this occurs, only releases and declines are still processed. |

**(3 of 5)**

| 5620 SAM counter name | Type | MIB counter name | Description |
|---|---|---|---|
| receivedDhcpDeclines | UINT128 | tmnxDhcpSvrStatsRxDeclines | The value of tmnxDhcpSvrStatsRxDeclines indicates the number of DHCPDECLINE (option 53 with value 4) packets received by the DHCP server instance. |
| receivedDhcpDiscovers | UINT128 | tmnxDhcpSvrStatsRxDiscovers | The value of tmnxDhcpSvrStatsRxDiscovers indicates the number of DHCPDISCOVER (option 53 with value 1) packets received by the DHCP server instance. |
| receivedDhcpInforms | UINT128 | tmnxDhcpSvrStatsRxInforms | The value of tmnxDhcpSvrStatsRxInforms indicates the number of DHCPINFORM (option 53 with value 8) packets received by the DHCP server instance. |
| receivedDhcpReleases | UINT128 | tmnxDhcpSvrStatsRxReleases | The value of tmnxDhcpSvrStatsRxReleases indicates the number of DHCPRELEASE (option 53 with value 7) packets received by the DHCP server instance. |
| receivedDhcpRequests | UINT128 | tmnxDhcpSvrStatsRxRequests | The value of tmnxDhcpSvrStatsRxRequests indicates the number of DHCPREQUEST (option 53 with value 3) packets received by the DHCP server instance. |
| sentDhcpAcks | UINT128 | tmnxDhcpSvrStatsTxAcks | The value of tmnxDhcpSvrStatsTxAcks indicates the number of DHCPACK (option 53 with value 5) packets sent by the DHCP server instance. |
| sentDhcpForceRenews | UINT128 | tmnxDhcpSvrStatsTxForceRenews | The value of tmnxDhcpSvrStatsTxForceRenews indicates the number of DHCPFORCERENEW (option 53 with value 9) packets sent by the DHCP server instance. |
| sentDhcpNaks | UINT128 | tmnxDhcpSvrStatsTxNaks | The value of tmnxDhcpSvrStatsTxNaks indicates the number of DHCPNAK (option 53 with value 6) packets sent by the DHCP server instance. |
| sentDhcpOffers | UINT128 | tmnxDhcpSvrStatsTxOffers | The value of tmnxDhcpSvrStatsTxOffers indicates the number of DHCPOFFER (option 53 with value 2) packets sent by the DHCP server instance. |
| unknownHostsDropped | long | tmnxDhcpSvrStatsDropUnknownHosts | The value of tmnxDhcpSvrStatsDropUnknownHosts indicates the number of DHCP packets dropped from hosts which were not found in the user database when tmnxDhcpServerCfgUseGiAddress was disabled. |
| userNotAllowedDropped | long | tmnxDhcpSvrStatsDropUserNotAllow | The value of tmnxDhcpSvrStatsDropUserNotAllow indicates the number of DHCP packets dropped from hosts which are found in the user database, but which have no address or pool specified, nor has tmnxDhcpServerCfgUseGiAddress set to 'true'. |

**(4 of 5)**

| 5620 SAM counter name | Type | MIB counter name | Description |
|---|---|---|---|
| **LocalDhcpServerSubnetStats**<br>MIB table name: TIMETRA-DHCP-SERVER-MIB.tmnxDhcpSvrSubnetStatsTable<br>Monitored class: dhcp.Subnet | | | |
| declinedAddresses | long | tmnxDhcpSvrSubnetStats Declined | The value of tmnxDhcpSvrSubnetStatsDeclined indicates the number of addresses in this subnet that are declined. |
| forceRenewPendingLeases | long | tmnxDhcpSvrSubnetStats FRPending | The value of tmnxDhcpSvrSubnetStatsFRPending indicates the number of leases in this subnet that are in state 'forceRenewPending. |
| freeAddresses | long | tmnxDhcpSvrSubnetStats Free | The value of tmnxDhcpSvrSubnetStatsFree indicates the number of addresses in this subnet that are free. |
| offeredLeases | long | tmnxDhcpSvrSubnetStats Offered | The value of tmnxDhcpSvrSubnetStatsOffered indicates the number of leases in this subnet that are in state 'offered'. |
| removePendingLeases | long | tmnxDhcpSvrSubnetStats RemPending | The value of tmnxDhcpSvrSubnetStatsRemPending indicates the number of leases in this subnet that are in state 'removePending'. |
| stableLeases | long | tmnxDhcpSvrSubnetStats Stable | The value of tmnxDhcpSvrSubnetStatsStable indicates the number of leases in this subnet that are in state 'stable'. |

**(5 of 5)**

### Table A-11 diameter statistics

| 5620 SAM counter name | Type | MIB counter name | Description |
|---|---|---|---|
| **DiameterPeerStats**<br>MIB table name: TIMETRA-DIAMETER-MIB.tmnxDiamPlcyPeerStatsTable<br>Monitored class: diameter.DiameterPeer | | | |
| asaTx | long | tmnxDiamPeerStAsaTx | The value of tmnxDiamPeerStAsaTx indicates the number of Abort-Session-Answer messages that are transmitted to the server. REFERENCE RFC 3588 Diameter Based Protocol, section 8.5.2. |
| asrRx | long | tmnxDiamPeerStAsrRx | The value of tmnxDiamPeerStAsrRx indicates the number of Abort-Session-Request messages that are received from the server. REFERENCE RFC 3588 Diameter Based Protocol, section 8.5.1. |

**(1 of 4)**

| 5620 SAM counter name | Type | MIB counter name | Description |
|---|---|---|---|
| ccaInitialRx | long | tmnxDiamPeerStCcaInitialRx | The value of tmnxDiamPeerStCcaInitialRx indicates the number of Credit Control Answer messages in response to the CCR INITIAL_REQUEST that are received from the server. REFERENCE RFC 4006 Diameter Credit-Control Application, section 8.3 and Appendix A1. |
| ccaTerminateRx | long | tmnxDiamPeerStCcaTerminateRx | The value of tmnxDiamPeerStCcaTerminateRx indicates the number of Credit Control Answer messages in response to the CCR TERMINATION_REQUEST that are received from the server. REFERENCE RFC 4006 Diameter Credit-Control Application, section 8.3 and Appendix A1. |
| ccaUpdateRx | long | tmnxDiamPeerStCcaUpdateRx | The value of tmnxDiamPeerStCcaUpdateRx indicates the number of Credit Control Answer messages in response to the CCR UPDATE_REQUEST that are received from the server. REFERENCE RFC 4006 Diameter Credit-Control Application, section 8.3 and Appendix A1. |
| ccrInitialTx | long | tmnxDiamPeerStCcrInitialTx | The value of tmnxDiamPeerStCcrInitialTx indicates the number of Credit Control Request messages with CC-Request-Type AVP equal to INITIAL_REQUEST that are transmitted to the server. REFERENCE RFC 4006 Diameter Credit-Control Application, section 8.3 and Appendix A1. |
| ccrTerminateTx | long | tmnxDiamPeerStCcrTerminateTx | The value of tmnxDiamPeerStCcrTerminateTx indicates the number of Credit Control Request messages with CC-Request-Type AVP equal to TERMINATION_REQUEST that are transmitted to the server. REFERENCE RFC 4006 Diameter Credit-Control Application, section 8.3 and Appendix A1. |
| ccrUpdateTx | long | tmnxDiamPeerStCcrUpdateTx | The value of tmnxDiamPeerStCcrUpdateTx indicates the number of Credit Control Request messages with CC-Request-Type AVP equal to UPDATE_REQUEST that are transmitted to the server. REFERENCE RFC 4006 Diameter Credit-Control Application, section 8.3 and Appendix A1. |
| ceaRx | long | tmnxDiamPeerStCeaRx | The value of tmnxDiamPeerStCeaRx indicates the number of Capabilities-Exchange-Answer messages that are received from the server. REFERENCE RFC 3588 Diameter Based Protocol, section 5.3.2. |
| cerTx | long | tmnxDiamPeerStCerTx | The value of tmnxDiamPeerStCerTx indicates the number of Capabilities-Exchange-Request messages that are transmitted to the server. REFERENCE RFC 3588 Diameter Based Protocol, section 5.3.1. |

**(2 of 4)**

| 5620 SAM counter name | Type | MIB counter name | Description |
|---|---|---|---|
| clientInitiatedPendingMsgsPMQ | long | tmnxDiamPeerStCiPendMsgsPMQ | The value of tmnxDiamPeerStCiPendMsgsPMQ indicates client initiated roundtrip DIAMETER statistics regarding the number of request messages in the Pending Message Queue waiting to be matched with corresponding response messages from the server. |
| clientInitiatedReqTimoutsPMQ | long | tmnxDiamPeerStCiReqTimeoutsPMQ | The value of tmnxDiamPeerStCiReqTimeoutsPMQ indicates client initiated roundtrip DIAMETER statistics regarding the number of request messages that were removed from the Pending Message Queue due to a match timeout. |
| dpaRx | long | tmnxDiamPeerStDpaRx | The value of tmnxDiamPeerStDpaRx indicates the number of Disconnect-Peer-Answer messages that are received from the server. REFERENCE RFC 3588 Diameter Based Protocol, section 5.4.2. |
| dpaTx | long | tmnxDiamPeerStDpaTx | The value of tmnxDiamPeerStDpaTx indicates the number of Disconnect-Peer-Answer messages that are transmitted to the server. REFERENCE RFC 3588 Diameter Based Protocol, section 5.4.2. |
| dprRx | long | tmnxDiamPeerStDprRx | The value of tmnxDiamPeerStDprRx indicates the number of Disconnect-Peer-Request messages that are received from the server. REFERENCE RFC 3588 Diameter Based Protocol, section 5.4.1. |
| dprTx | long | tmnxDiamPeerStDprTx | The value of tmnxDiamPeerStDprTx indicates the number of Disconnect-Peer-Request messages that are transmitted to the server. REFERENCE RFC 3588 Diameter Based Protocol, section 5.4.1. |
| raaTx | long | tmnxDiamPeerStRaaTx | The value of tmnxDiamPeerStRaaTx indicates the number of Re-Auth-Answer messages that are transmitted to the server. REFERENCE RFC 3588 Diameter Based Protocol, section 8.3.2. |
| rarRx | long | tmnxDiamPeerStRarRx | The value of tmnxDiamPeerStRarRx indicates the number of Re-Auth-Request messages that are received from the server. REFERENCE RFC 3588 Diameter Based Protocol, section 8.3.1. |
| siDiameterRxDropCount | long | tmnxDiamPeerStSiDiamRxDropCnt | The value of tmnxDiamPeerStSiDiamRxDropCnt indicates client initiated roundtrip DIAMETER statistics regarding the number of dropped request messages upon reception from server. |

**(3 of 4)**

| 5620 SAM counter name | Type | MIB counter name | Description |
|---|---|---|---|
| siDiameterRxRequests | long | tmnxDiamPeerStSiDiamRxReqs | The value of tmnxDiamPeerStSiDiamRxReqs indicates client initiated roundtrip DIAMETER statistics regarding the number of request messages received from server. |
| siDiameterTxResponses | long | tmnxDiamPeerStSiDiamTxResps | The value of tmnxDiamPeerStSiDiamTxResps indicates client initiated roundtrip DIAMETER statistics regarding the number of response messages sent to server. |
| siTcpSendFailed | long | tmnxDiamPeerStSiTcpSendFailed | The value of tmnxDiamPeerStSiTcpSendFailed indicates client initiated roundtrip DIAMETER statistics regarding the number of TCP send failures. |
| wdaRx | long | tmnxDiamPeerStWdaRx | The value of tmnxDiamPeerStWdaRx indicates the number of Device-Watchdog-Answer messages that are received from the server. REFERENCE RFC 3588 Diameter Based Protocol, section 5.5.2. |
| wdaTx | long | tmnxDiamPeerStWdaTx | The value of tmnxDiamPeerStWdaTx indicates the number of Device-Watchdog-Answer messages that are transmitted to the server. REFERENCE RFC 3588 Diameter Based Protocol, section 5.5.2. |
| wdrRx | long | tmnxDiamPeerStWdrRx | The value of tmnxDiamPeerStWdrRx indicates the number of Device-Watchdog-Request messages that are received from the server. REFERENCE RFC 3588 Diameter Based Protocol, section 5.5.1. |
| wdrTx | long | tmnxDiamPeerStWdrTx | The value of tmnxDiamPeerStWdrTx indicates the number of Device-Watchdog-Request messages that are transmitted to the server. REFERENCE RFC 3588 Diameter Based Protocol, section 5.5.1. |

**(4 of 4)**

### Table A-12 equipment statistics

| 5620 SAM counter name | Type | MIB counter name | Description |
|---|---|---|---|
| **AllocatedMemoryStats**<br>MIB table name: TIMETRA-SYSTEM-MIB.sgiMemoryPoolAllocated<br>Monitored class: equipment.SystemStatsHolder | | | |
| allocatedMemory | long | sgiMemoryPoolAllocated | The value of sgiMemoryPoolAllocated indicates the total memory currently allocated in memory-pools on the system. This memory may or may not be currently in use, but is pre-allocated should the software need to use it. |

**(1 of 13)**

| 5620 SAM counter name | Type | MIB counter name | Description |
|---|---|---|---|
| **AvailableMemoryStats**<br>MIB table name: TIMETRA-SYSTEM-MIB.sgiMemoryAvailable<br>Monitored class: equipment.SystemStatsHolder | | | |
| availableMemory | long | sgiMemoryAvailable | The value of sgiMemoryAvailable indicates the amount of free memory in the overall system that is not allocated to memory pools, but is available in case a memory pool needs to grow. |
| **CiscoHDLCStats**<br>MIB table name: TIMETRA-PORT-MIB.tmnxCiscoHDLCStatsTable<br>Monitored classes:<br>• tdmequipment.DS3E3Channel<br>• tdmequipment.DS0ChannelGroup | | | |
| discardStatInPkts | long | tmnxCiscoHDLCDiscardStatInPkts | tmnxCiscoHDLCDiscardStatInPkts indicates the number of inbound Cisco HDLC packets discarded. |
| discardStatOutPkts | long | tmnxCiscoHDLCDiscardStatOutPkts | tmnxCiscoHDLCDiscardStatOutPkts indicates the number of outbound Cisco HDLC packets discarded. |
| statInOctets | long | tmnxCiscoHDLCStatInOctets | tmnxCiscoHDLCStatInOctets indicates the number of inbound Cisco HDLC octets. |
| statInPkts | long | tmnxCiscoHDLCStatInPkts | tmnxCiscoHDLCStatInPkts indicates the number of inbound Cisco HDLC packets. |
| statOutOctets | long | tmnxCiscoHDLCStatOutOctets | tmnxCiscoHDLCStatOutOctets indicates the number of outbound Cisco HDLC octets. |
| statOutPkts | long | tmnxCiscoHDLCStatOutPkts | tmnxCiscoHDLCStatOutPkts indicates the number of outbound Cisco HDLC packets. |
| **FibNextHopStats**<br>MIB table name: TIMETRA-VRTR-MIB.vRtrFibStatNextHopTable<br>Monitored class: equipment.BaseCard | | | |
| ipActive | long | vRtrFibStatNextHopIPActive | vRtrFibStatNextHopIPActive indicates current active IP next-hop counts for the FIB on the IOM. |
| ipAvailable | long | vRtrFibStatNextHopIPAvailable | vRtrFibStatNextHopIPAvailable indicates the available IP next-hop counts for the FIB on the IOM. |
| tunnelActive | long | vRtrFibStatNextHopTunnelActive | vRtrFibStatNextHopTunnelActive indicates current active Tunnel next-hop counts for the FIB on the IOM. |
| tunnelAvailable | long | vRtrFibStatNextHopTunnelAvailable | vRtrFibStatNextHopTunnelAvailable indicates the available Tunnel next-hop counts for the FIB on the IOM. |
| **FibStats**<br>MIB table name: TIMETRA-VRTR-MIB.vRtrFibStatTable<br>Monitored class: equipment.BaseCard | | | |
| aggrRoutes | long | vRtrFibStatAggrRoutes | vRtrFibStatAggrRoutes indicates current aggregate route counts for the virtual router. |

**(2 of 13)**

| 5620 SAM counter name | Type | MIB counter name | Description |
|---|---|---|---|
| alarmCount | long | vRtrFibStatAlarmCount | vRtrFibStatAlarmCount indicates the number of times the FIB has raised an alarm due to high FIB usage. |
| bgpRoutes | long | vRtrFibStatBGPRoutes | vRtrFibStatBGPRoutes indicates current BGP route counts for the virtual router. |
| bgpVpnRoutes | long | vRtrFibStatBGPVpnRoutes | vRtrFibStatBGPVpnRoutes indicates current BGP VPN route counts for the virtual router. |
| directRoutes | long | vRtrFibStatDirectRoutes | vRtrFibStatDirectRoutes indicates current direct route counts for the virtual router. |
| highUtilization | boolean | vRtrFibStatHighUtilizatio n | vRtrFibStatHighUtilization indicates whether or not the FIB on the IOM is experiences persistent high occupancy. |
| hostRoutes | long | vRtrFibStatHostRoutes | vRtrFibStatHostRoutes indicates current host route counts for the virtual router. |
| isisRoutes | long | vRtrFibStatISISRoutes | vRtrFibStatISISRoutes indicates current ISIS route counts for the virtual router. |
| lastAlarmTime | long | vRtrFibStatLastAlarmTim e | vRtrFibStatLastAlarmTime indicates the last time a high FIB usage alarm was raised. |
| managedRoutes | long | vRtrFibStatManagedRoute s | vRtrFibStatManagedRoutes indicates current managed route counts for the virtual router. |
| ospfRoutes | long | vRtrFibStatOSPFRoutes | vRtrFibStatOSPFRoutes indicates current OSPF route counts for the virtual router. |
| overflows | long | vRtrFibStatOverflows | vRtrFibStatOverflows indicates the number of times the FIB has run out of space. |
| ripRoutes | long | vRtrFibStatRIPRoutes | vRtrFibStatRIPRoutes indicates current RIP route counts for the virtual router. |
| staticRoutes | long | vRtrFibStatStaticRoutes | vRtrFibStatStaticRoutes indicates current static route counts for the virtual router. |
| subMgmtRoutes | long | vRtrFibStatSubMgmtRout es | vRtrFibStatSubMgmtRoutes indicates current Sub-management route counts for the virtual router. |
| v6AggrRoutes | long | vRtrFibStatV6AggrRoutes | vRtrFibStatV6AggrRoutes indicates current aggregate route counts for the virtual router. |
| v6BGPRoutes | long | vRtrFibStatV6BGPRoutes | vRtrFibStatV6BGPRoutes indicates current BGP route counts for the virtual router. |
| v6BGPVpnRoutes | long | vRtrFibStatV6BGPVpnRou tes | vRtrFibStatV6BGPVpnRoutes indicates current BGP VPN route counts for the virtual router. |
| v6DirectRoutes | long | vRtrFibStatV6DirectRoute s | vRtrFibStatV6DirectRoutes indicates current direct route counts for the virtual router. |
| v6HostRoutes | long | vRtrFibStatV6HostRoutes | vRtrFibStatV6HostRoutes indicates current host route counts for the virtual router. |

**(3 of 13)**

| 5620 SAM counter name | Type | MIB counter name | Description |
|---|---|---|---|
| v6ISISRoutes | long | vRtrFibStatV6ISISRoutes | vRtrFibStatV6ISISRoutes indicates current ISIS route counts for the virtual router. |
| v6ManagedRoutes | long | vRtrFibStatV6ManagedRoutes | vRtrFibStatV6ManagedRoutes indicates current managed route counts for the virtual router. |
| v6OSPFRoutes | long | vRtrFibStatV6OSPFRoutes | vRtrFibStatV6OSPFRoutes indicates current OSPF route counts for the virtual router. |
| v6RIPRoutes | long | vRtrFibStatV6RIPRoutes | vRtrFibStatV6RIPRoutes indicates current RIP route counts for the virtual router. |
| v6StaticRoutes | long | vRtrFibStatV6StaticRoutes | vRtrFibStatV6StaticRoutes indicates current static route counts for the virtual router. |
| v6SubMgmtRoutes | long | vRtrFibStatV6SubMgmtRoutes | vRtrFibStatV6SubMgmtRoutes indicates current Sub-management route counts for the virtual router. |
| v6VpnLeakRoutes | long | vRtrFibStatV6VPNLeakRoutes | vRtrFibStatV6VPNLeakRoutes indicates current IPv6 VPN Leak route counts for the virtual router. |
| vpnLeakRoutes | long | vRtrFibStatVPNLeakRoutes | vRtrFibStatVPNLeakRoutes indicates current VPN Leak route counts for the virtual router. |
| **InterfaceAdditionalStats**<br>MIB table name: IF-MIB.ifXTable<br>Monitored classes: equipment.PhysicalPort; equipment.ManagementPort; lag.Interface; bundle.Interface; sonetequipment.Sts1Channel; sonetequipment.Sts3Channel; sonetequipment.Sts12Channel; sonetequipment.Sts48Channel; sonetequipment.Sts192Channel; tdmequipment.DS3E3Channel; tdmequipment.DS1E1Channel; tdmequipment.DS0ChannelGroup; ccag.CcagPathCcNetSap; ccag.CcagPathCcSapNet; ccag.CcagPathCcSapSap; sonetequipment.Tu3Channel; sonetequipment.TributaryChannel | | | |
| receivedBroadcastPackets | UINT128 | ifHCInBroadcastPkts | The number of packets, delivered by this sub-layer to a higher (sub-)layer, which were addressed to a broadcast address at this sub-layer. This object is a 64-bit version of ifInBroadcastPkts. Discontinuities in the value of this counter can occur at re-initialization of the management system, and at other times as indicated by the value of ifCounterDiscontinuityTime. |
| receivedMulticastPackets | UINT128 | ifHCInMulticastPkts | The number of packets, delivered by this sub-layer to a higher (sub-)layer, which were addressed to a multicast address at this sub-layer. For a MAC layer protocol, this includes both Group and Functional addresses. This object is a 64-bit version of ifInMulticastPkts. Discontinuities in the value of this counter can occur at re-initialization of the management system, and at other times as indicated by the value of ifCounterDiscontinuityTime. |

**(4 of 13)**

| 5620 SAM counter name | Type | MIB counter name | Description |
|---|---|---|---|
| receivedTotalOctets | UINT128 | ifHCInOctets | The total number of octets received on the interface, including framing characters. This object is a 64-bit version of ifInOctets. Discontinuities in the value of this counter can occur at re-initialization of the management system, and at other times as indicated by the value of ifCounterDiscontinuityTime. |
| receivedUnicastPackets | UINT128 | ifHCInUcastPkts | The number of packets, delivered by this sub-layer to a higher (sub-)layer, which were not addressed to a multicast or broadcast address at this sub-layer. This object is a 64-bit version of ifInUcastPkts. Discontinuities in the value of this counter can occur at re-initialization of the management system, and at other times as indicated by the value of ifCounterDiscontinuityTime. |
| transmittedBroadcastPackets | UINT128 | ifHCOutBroadcastPkts | The total number of packets that higher-level protocols requested be transmitted, and which were addressed to a broadcast address at this sub-layer, including those that were discarded or not sent. This object is a 64-bit version of ifOutBroadcastPkts. Discontinuities in the value of this counter can occur at re-initialization of the management system, and at other times as indicated by the value of ifCounterDiscontinuityTime. |
| transmittedMulticastPackets | UINT128 | ifHCOutMulticastPkts | The total number of packets that higher-level protocols requested be transmitted, and which were addressed to a multicast address at this sub-layer, including those that were discarded or not sent. For a MAC layer protocol, this includes both Group and Functional addresses. This object is a 64-bit version of ifOutMulticastPkts. Discontinuities in the value of this counter can occur at re-initialization of the management system, and at other times as indicated by the value of ifCounterDiscontinuityTime. |
| transmittedTotalOctets | UINT128 | ifHCOutOctets | The total number of octets transmitted out of the interface, including framing characters. This object is a 64-bit version of ifOutOctets. Discontinuities in the value of this counter can occur at re-initialization of the management system, and at other times as indicated by the value of ifCounterDiscontinuityTime. |

**(5 of 13)**

| 5620 SAM counter name | Type | MIB counter name | Description |
|---|---|---|---|
| transmittedUnicastPackets | UINT128 | ifHCOutUcastPkts | The total number of packets that higher-level protocols requested be transmitted, and which were not addressed to a multicast or broadcast address at this sub-layer, including those that were discarded or not sent. This object is a 64-bit version of ifOutUcastPkts. Discontinuities in the value of this counter can occur at re-initialization of the management system, and at other times as indicated by the value of ifCounterDiscontinuityTime. |
| **InterfaceStats**<br>MIB table name: IF-MIB.ifTable<br>Monitored classes: equipment.PhysicalPort; equipment.ManagementPort; lag.Interface; bundle.Interface; sonetequipment.Sts1Channel; sonetequipment.Sts3Channel; sonetequipment.Sts12Channel; sonetequipment.Sts48Channel; sonetequipment.Sts192Channel; tdmequipment.DS3E3Channel; tdmequipment.DS1E1Channel; tdmequipment.DS0ChannelGroup; ccag.CcagPathCcNetSap; ccag.CcagPathCcSapNet; ccag.CcagPathCcSapSap; sonetequipment.Tu3Channel; sonetequipment.TributaryChannel | | | |
| outboundBadPackets | long | ifOutErrors | For packet-oriented interfaces, the number of outbound packets that could not be transmitted because of errors. For character-oriented or fixed-length interfaces, the number of outbound transmission units that could not be transmitted because of errors. Discontinuities in the value of this counter can occur at re-initialization of the management system, and at other times as indicated by the value of ifCounterDiscontinuityTime. |
| outboundPacketsDiscarded | long | ifOutDiscards | The number of outbound packets which were chosen to be discarded even though no errors had been detected to prevent their being transmitted. One possible reason for discarding such a packet could be to free up buffer space. Discontinuities in the value of this counter can occur at re-initialization of the management system, and at other times as indicated by the value of ifCounterDiscontinuityTime. |
| receivedBadPackets | long | ifInErrors | For packet-oriented interfaces, the number of inbound packets that contained errors preventing them from being deliverable to a higher-layer protocol. For character- oriented or fixed-length interfaces, the number of inbound transmission units that contained errors preventing them from being deliverable to a higher-layer protocol. Discontinuities in the value of this counter can occur at re-initialization of the management system, and at other times as indicated by the value of ifCounterDiscontinuityTime. |

**(6 of 13)**

| 5620 SAM counter name | Type | MIB counter name | Description |
|---|---|---|---|
| receivedOctets | long | ifInOctets | The total number of octets received on the interface, including framing characters. Discontinuities in the value of this counter can occur at re-initialization of the management system, and at other times as indicated by the value of ifCounterDiscontinuityTime. |
| receivedPacketsDiscarded | long | ifInDiscards | The number of inbound packets which were chosen to be discarded even though no errors had been detected to prevent their being deliverable to a higher-layer protocol. One possible reason for discarding such a packet could be to free up buffer space. Discontinuities in the value of this counter can occur at re-initialization of the management system, and at other times as indicated by the value of ifCounterDiscontinuityTime. |
| receivedUnicastPackets | long | ifInUcastPkts | The number of packets, delivered by this sub-layer to a higher (sub-)layer, which were not addressed to a multicast or broadcast address at this sub-layer. Discontinuities in the value of this counter can occur at re-initialization of the management system, and at other times as indicated by the value of ifCounterDiscontinuityTime. |
| receivedUnknownProtocolPackets | long | ifInUnknownProtos | For packet-oriented interfaces, the number of packets received via the interface which were discarded because of an unknown or unsupported protocol. For character-oriented or fixed-length interfaces that support protocol multiplexing the number of transmission units received via the interface which were discarded because of an unknown or unsupported protocol. For any interface that does not support protocol multiplexing, this counter will always be 0. Discontinuities in the value of this counter can occur at re-initialization of the management system, and at other times as indicated by the value of ifCounterDiscontinuityTime. |
| transmittedOctets | long | ifOutOctets | The total number of octets transmitted out of the interface, including framing characters. Discontinuities in the value of this counter can occur at re-initialization of the management system, and at other times as indicated by the value of ifCounterDiscontinuityTime. |

**(7 of 13)**

| 5620 SAM counter name | Type | MIB counter name | Description |
|---|---|---|---|
| transmittedUnicastPackets | long | ifOutUcastPkts | The total number of packets that higher-level protocols requested be transmitted, and which were not addressed to a multicast or broadcast address at this sub-layer, including those that were discarded or not sent. Discontinuities in the value of this counter can occur at re-initialization of the management system, and at other times as indicated by the value of ifCounterDiscontinuityTime. |
| **IpSecMDAStats**<br>MIB table name: TIMETRA-IPSEC-MIB.tmnxIPsecMdaDpStatsTable<br>Monitored class: equipment.DaughterCardSlot | | | |
| decryptBytes | UINT128 | tmnxIPsecMdaDpStatsDecryptBytes | The value of tmnxIPsecMdaDpStatsDecryptBytes indicates the number of bytes encrypted by the IPsec data path. |
| decryptPackets | UINT128 | tmnxIPsecMdaDpStatsDecryptPkts | The value of tmnxIPsecMdaDpStatsDecryptPkts indicates the number of packets encrypted by the IPsec data path. |
| encryptBytes | UINT128 | tmnxIPsecMdaDpStatsEncryptBytes | The value of tmnxIPsecMdaDpStatsEncryptBytes indicates the number of bytes encrypted by the IPsec data path. |
| encryptPackets | UINT128 | tmnxIPsecMdaDpStatsEncryptPkts | The value of tmnxIPsecMdaDpStatsEncryptPkts indicates the number of packets encrypted by the IPsec data path. |
| inboundIPDropPackets | UINT128 | tmnxIPsecMdaDpStatsInBDropPkts | The value of tmnxIPsecMdaDpStatsInBDropPkts indicates the number of packets dropped before and during inbound (decryption) processing by the IPsec data path. |
| inboundIPDstSrcMismatches | long | tmnxIPsecMdaDpStatsInBIPDstSrcMismatches | The value of tmnxIPsecMdaDpStatsInBIPDstSrcMismatches indicates the number of packets dropped before inbound (decryption) processing by the IPsec data path due to the received packet's outer IP destination or source address does not match the Tunnel's local or peer gateway address. |
| inboundSaMisses | UINT128 | tmnxIPsecMdaDpStatsInBSAMisses | The value of tmnxIPsecMdaDpStatsInBSAMisses indicates the number of packets dropped before inbound (decryption) processing by the IPsec data path due to no SA (security association) present. |
| outboundIPDropPackets | UINT128 | tmnxIPsecMdaDpStatsOutBDropPkts | The value of tmnxIPsecMdaDpStatsOutBDropPkts indicates the number of packets dropped before and during outbound (encryption) processing by the IPsec data path. |

**(8 of 13)**

| 5620 SAM counter name | Type | MIB counter name | Description |
|---|---|---|---|
| outboundPolicyEntryMisses | long | tmnxIPsecMdaDpStatsOutBPolicyEntryMisses | The value of tmnxIPsecMdaDpStatsOutBPolicyEntryMisses indicates the number of packets dropped before outbound (encryption) processing by the IPsec data path due to no matching Policy Entry. |
| outboundSaMisses | UINT128 | tmnxIPsecMdaDpStatsOutBSAMisses | The value of tmnxIPsecMdaDpStatsOutBSAMisses indicates the number of packets dropped before outbound (encryption) processing by the IPsec data path due to no SA (security association) present. |
| transmitPacketErrors | long | tmnxIPsecMdaDpStatsTxPktErrs | The value of tmnxIPsecMdaDpStatsTxPktErrs indicates the number of packets transmit failures by the IPsec data path. |
| **MediaIndependentStats**<br>MIB table name: HC-RMON-MIB.mediaIndependentTable<br>Monitored classes:<br>• equipment.PhysicalPort<br>• equipment.ManagementPort | | | |
| dropEvents | long | mediaIndependentDropEvents | The total number of events in which packets were dropped by the probe due to lack of resources. Note that this number is not necessarily the number of packets dropped; it is just the number of times this condition has been detected. |
| droppedFrames | long | mediaIndependentDroppedFrames | The total number of frames which were received by the probe and therefore not accounted for in the mediaIndependentDropEvents, but for which the probe chose not to count for this entry for whatever reason. Most often, this event occurs when the probe is out of some resources and decides to shed load from this collection. This count does not include packets that were not counted because they had MAC-layer errors. Note that, unlike the dropEvents counter, this number is the exact number of frames dropped. |
| duplex | int | mediaIndependentDuplexMode | The current mode of this link. Note that if the link has full-duplex capabilities but is operating in half-duplex mode, this value will be halfduplex(1). |
| duplexChanges | long | mediaIndependentDuplexChanges | The number of times this link has changed from full-duplex mode to half-duplex mode or from half-duplex mode to full-duplex mode. |
| inputSpeed | long | mediaIndependentInputSpeed | The nominal maximum speed in kilobits per second of this half-duplex link or on the inbound connection of this full-duplex link. If the speed is unknown or there is no fixed maximum (e.g. a compressed link), this value shall be zero. |

**(9 of 13)**

| 5620 SAM counter name | Type | MIB counter name | Description |
|---|---|---|---|
| outputSpeed | long | mediaIndependentOutputSpeed | The nominal maximum speed in kilobits per second of this full-duplex link in the direction of the network. If the speed is unknown, the link is half-duplex, or there is no fixed maximum (e.g. a compressed link), this value shall be zero. |
| receivedBadPackets | long | mediaIndependentInErrors | The total number of bad packets received on a half-duplex link or on the inbound connection of a full-duplex link. |
| receivedNonUnicastPackets | UINT128 | mediaIndependentInNUCastHighCapacityPkts | The total number of non-unicast packets (including bad packets) received on a half-duplex link or on the inbound connection of a full-duplex link. |
| receivedOctets | UINT128 | mediaIndependentInHighCapacityOctets | The total number of octets of data (including those in bad packets) received (excluding framing bits but including FCS octets) on a half-duplex link or on the inbound connection of a full-duplex link. |
| receivedPackets | UINT128 | mediaIndependentInHighCapacityPkts | The total number of packets (including bad packets, broadcast packets, and multicast packets) received on a half-duplex link or on the inbound connection of a full-duplex link. |
| transmittedBadPackets | long | mediaIndependentOutErrors | The total number of bad packets received on a full-duplex link in the direction of the network. |
| transmittedNonUnicastPackets | UINT128 | mediaIndependentOutNUCastHighCapacityPkts | The total number of packets (including bad packets) received on a full-duplex link in the direction of the network. |
| transmittedOctets | UINT128 | mediaIndependentOutHighCapacityOctets | The total number of octets of data (including those in bad packets) received on a full-duplex link in the direction of the network (excluding framing bits but including FCS octets). |
| transmittedPackets | UINT128 | mediaIndependentOutHighCapacityPkts | The total number of packets (including bad packets, broadcast packets, and multicast packets) received on a full-duplex link in the direction of the network. |
| **PortNetEgressStats**<br>MIB table name: TIMETRA-PORT-MIB.tmnxPortNetEgressStatsTable<br>Monitored class: equipment.PhysicalPort | | | |
| inProfileOctetsDropped | UINT128 | tmnxPortNetEgressDroInProfOcts | tmnxPortNetEgressDroInProfOcts indicates the number of conforming network egress octets dropped on this port using this queue. |
| inProfileOctetsForwarded | UINT128 | tmnxPortNetEgressFwdInProfOcts | tmnxPortNetEgressFwdInProfOcts indicates the number of conforming network egress octets forwarded on this port using this queue. |
| inProfilePacketsDropped | UINT128 | tmnxPortNetEgressDroInProfPkts | tmnxPortNetEgressDroInProfPkts indicates the number of conforming network egress packets dropped on this port using this queue. |

**(10 of 13)**

| 5620 SAM counter name | Type | MIB counter name | Description |
|---|---|---|---|
| inProfilePacketsForwarded | UINT128 | tmnxPortNetEgressFwdInProfPkts | tmnxPortNetEgressFwdInProfPkts indicates the number of conforming network egress packets forwarded on this port using this queue. |
| outOfProfileOctetsDropped | UINT128 | tmnxPortNetEgressDroOutProfOcts | tmnxPortNetEgressDroOutProfOcts indicates the number of exceeding network egress octets dropped on this port using this queue. |
| outOfProfileOctetsForwarded | UINT128 | tmnxPortNetEgressFwdOutProfOcts | tmnxPortNetEgressFwdOutProfOcts indicates the number of exceeding network egress octets forwarded on this port using this queue. |
| outOfProfilePacketsDropped | UINT128 | tmnxPortNetEgressDroOutProfPkts | tmnxPortNetEgressDroOutProfPkts indicates the number of exceeding network egress packets dropped on this port using this queue. |
| outOfProfilePacketsForwarded | UINT128 | tmnxPortNetEgressFwdOutProfPkts | tmnxPortNetEgressFwdOutProfPkts indicates the number of exceeding network egress packets forwarded on this port using this queue. |
| queueId | long | tmnxPortNetEgressQueueIndex | tmnxPortNetEgressQueueIndex serves as the tertiary index. When used in conjunction with tmnxChassisIndex and tmnxPortPortID, it uniquely identifies a network egress queue for the specified port in the managed system. |
| **PortNetIngressStats**<br>MIB table name: TIMETRA-PORT-MIB.tmnxPortNetIngressStatsTable<br>Monitored class: equipment.PhysicalPort | | | |
| inProfileOctetsDropped | UINT128 | tmnxPortNetIngressDroInProfOcts | tmnxPortNetIngressDroInProfOcts indicates the number of conforming network ingress octets dropped on this port using this queue. |
| inProfileOctetsForwarded | UINT128 | tmnxPortNetIngressFwdInProfOcts | tmnxPortNetIngressFwdInProfOcts indicates the number of conforming network ingress octets forwarded on this port using this queue. |
| inProfilePacketsDropped | UINT128 | tmnxPortNetIngressDroInProfPkts | tmnxPortNetIngressDroInProfPkts indicates the number of conforming network ingress packets dropped on this port using this queue. |
| inProfilePacketsForwarded | UINT128 | tmnxPortNetIngressFwdInProfPkts | tmnxPortNetIngressFwdInProfPkts indicates the number of conforming network ingress packets forwarded on this port using this queue. |
| outOfProfileOctetsDropped | UINT128 | tmnxPortNetIngressDroOutProfOcts | tmnxPortNetIngressDroOutProfOcts indicates the number of exceeding network ingress octets dropped on this port using this queue. |
| outOfProfileOctetsForwarded | UINT128 | tmnxPortNetIngressFwdOutProfOcts | tmnxPortNetIngressFwdOutProfOcts indicates the number of exceeding network ingress octets forwarded on this port using this queue. |

**(11 of 13)**

| 5620 SAM counter name | Type | MIB counter name | Description |
|---|---|---|---|
| outOfProfilePacketsDropped | UINT128 | tmnxPortNetIngressDroOutProfPkts | tmnxPortNetIngressDroOutProfPkts indicates the number of exceeding network ingress packets dropped on this port using this queue. |
| outOfProfilePacketsForwarded | UINT128 | tmnxPortNetIngressFwdOutProfPkts | tmnxPortNetIngressFwdOutProfPkts indicates the number of exceeding network ingress packets forwarded on this port using this queue. |
| **PortTerminationStats**<br>MIB table name: TIMETRA-PORT-MIB.tmnxBundleMemberImaTable<br>Monitored class: bundle.PortTermination | | | |
| bundleMemberImaErrorIcpCells | long | tmnxBundleMemberImaErrorIcpCells | tmnxBundleMemberImaErrorIcpCells indicates the number of ICP cells with HEC or CRC-10 errors. |
| bundleMemberImaFeRxNumFails | long | tmnxBundleMemberImaFeRxNumFails | tmnxBundleMemberImaFeRxNumFails indicates the number of times that a far-end receive alarm is set on the IMA link. |
| bundleMemberImaFeRxUnuseSecs | long | tmnxBundleMemberImaFeRxUnuseSecs | tmnxBundleMemberImaFeRxUnuseSecs indicates the number of unavailable seconds at the far-end receive link state machine. |
| bundleMemberImaFeSevErrSecs | long | tmnxBundleMemberImaFeSevErrSecs | tmnxBundleMemberImaFeSevErrSecs indicates the number of one second intervals in which the far-end contains IMA-RDI defects. |
| bundleMemberImaFeTxNumFails | long | tmnxBundleMemberImaFeTxNumFails | tmnxBundleMemberImaFeTxNumFails indicates the number of times that a far-end transmit alarm is set on the IMA link. |
| bundleMemberImaFeTxUnuseSecs | long | tmnxBundleMemberImaFeTxUnuseSecs | tmnxBundleMemberImaFeTxUnuseSecs indicates the number of unavailable seconds at the far-end transmit link state machine. |
| bundleMemberImaFeUnavailSecs | long | tmnxBundleMemberImaFeUnavailSecs | tmnxBundleMemberImaFeUnavailSecs indicates the number of unavailable seconds at the near-end. |
| bundleMemberImaLstRxIcpCells | long | tmnxBundleMemberImaLstRxIcpCells | tmnxBundleMemberImaLstRxIcpCells indicates the number of lost ICP cells at the expected offset. |
| bundleMemberImaNeRxNumFails | long | tmnxBundleMemberImaNeRxNumFails | tmnxBundleMemberImaNeRxNumFails indicates the number of times that a near-end receive alarm is set on the IMA link. |
| bundleMemberImaNeRxUnuseSecs | long | tmnxBundleMemberImaNeRxUnuseSecs | tmnxBundleMemberImaNeRxUnuseSecs indicates the number of unavailable seconds at the near-end receive link state machine. |
| bundleMemberImaNeSevErrSecs | long | tmnxBundleMemberImaNeSevErrSecs | tmnxBundleMemberImaNeSevErrSecs indicates the number of one second intervals in which thirty percent or more of the near-end ICP cells are in violation, or link defects have occurred. |

**(12 of 13)**

| 5620 SAM counter name | Type | MIB counter name | Description |
|---|---|---|---|
| bundleMemberImaNeTxNumFails | long | tmnxBundleMemberImaNeTxNumFails | tmnxBundleMemberImaNeTxNumFails indicates the number of times that a near-end transmit alarm is set on the IMA link. |
| bundleMemberImaNeTxUnuseSecs | long | tmnxBundleMemberImaNeTxUnuseSecs | tmnxBundleMemberImaNeTxUnuseSecs indicates the number of unavailable seconds at the near-end transmit link state machine. |
| bundleMemberImaNeUnavailSecs | long | tmnxBundleMemberImaNeUnavailSecs | tmnxBundleMemberImaNeUnavailSecs indicates the number of unavailable seconds at the near-end. |
| bundleMemberImaOifAnomalies | long | tmnxBundleMemberImaOifAnomalies | tmnxBundleMemberImaOifAnomalies indicates the number of OIF anomalies at the near-end. |
| bundleMemberImaRxIcpCells | long | tmnxBundleMemberImaRxIcpCells | tmnxBundleMemberImaRxIcpCells indicates the number of ICP cells that have been received on the IMA link. |
| bundleMemberImaTxIcpCells | long | tmnxBundleMemberImaTxIcpCells | tmnxBundleMemberImaTxIcpCells indicates the number of ICP cells that have been transmitted on the IMA link. |
| bundleMemberImaViolations | long | tmnxBundleMemberImaViolations | tmnxBundleMemberImaViolations indicates the number of ICP violations including errored, invalid or missing ICP cells. |
| **SystemCpuStats**<br>MIB table name: TIMETRA-SYSTEM-MIB.sgiCpuUsage<br>Monitored class: equipment.SystemStatsHolder | | | |
| systemCpuUsage | long | sgiCpuUsage | The value of sgiCpuUsage indicates the current CPU utilization for the system. |
| **SystemMemoryStats**<br>MIB table name: TIMETRA-SYSTEM-MIB.sgiMemoryUsed<br>Monitored class: equipment.SystemStatsHolder | | | |
| systemMemoryUsage | long | sgiMemoryUsed | The value of sgiMemoryUsed indicates the total pre-allocated pool memory currently in use on the system. |

**(13 of 13)**

### Table A-13 ethernetequipment statistics

| 5620 SAM counter name | Type | MIB counter name | Description |
|---|---|---|---|
| **AdditionalEthernetStats**<br>MIB table name: TIMETRA-PORT-MIB.tmnxPortEtherTable<br>Monitored classes:<br>• equipment.PhysicalPort<br>• equipment.ManagementPort | | | |

**(1 of 21)**

| 5620 SAM counter name | Type | MIB counter name | Description |
|---|---|---|---|
| highCapacityPackets1519toMaxFrameSize | UINT128 | tmnxPortEtherHCPkts1519toMax | The total number of packets (including bad packets) received that were between 1519 octets in length and the maximum frame size, usually 12287 octets inclusive (excluding framing bits but including FCS octets). The lower 32-bits of this 64-bit counter will equal the value of tmnxPortEtherHCPkts1519toMax. The high 32-bits of this counter will equal the value of tmnxPortEtherHCOverPkts1519toMax. |
| packets1519toMaxFrameSize | long | tmnxPortEtherPkts1519toMax | The total number of packets received that were longer than 1518 octets but less than the maximum frame size for the particular medium, usually 12287 octets (excluding framing bits, but including FCS octets) and were otherwise well formed. |
| **Dot3Stats**<br>MIB table name: EtherLike-MIB.dot3StatsTable<br>Monitored class: equipment.PhysicalPort | | | |
| alignmentErrors | long | dot3StatsAlignmentErrors | A count of frames received on a particular interface that are not an integral number of octets in length and do not pass the FCS check. The count represented by an instance of this object is incremented when the alignmentError status is returned by the MAC service to the LLC (or other MAC user). Received frames for which multiple error conditions pertain are, according to the conventions of IEEE 802.3 Layer Management, counted exclusively according to the error status presented to the LLC. This counter does not increment for group encoding schemes greater than 4 bits per group. For interfaces operating at 10 Gb/s, this counter can roll over in less than 5 minutes if it is incrementing at its maximum rate. Since that amount of time could be less than a management station's poll cycle time, in order to avoid a loss of information, a management station is advised to poll the dot3HCStatsAlignmentErrors object for 10 Gb/s or faster interfaces. Discontinuities in the value of this counter can occur at re-initialization of the management system, and at other times as indicated by the value of ifCounterDiscontinuityTime. REFERENCE [IEEE 802.3 Std.], 30.3.1.1.7, aAlignmentErrors. |

**(2 of 21)**

| 5620 SAM counter name | Type | MIB counter name | Description |
|---|---|---|---|
| carrierSenseErrors | long | dot3StatsCarrierSenseErrors | The number of times that the carrier sense condition was lost or never asserted when attempting to transmit a frame on a particular interface. The count represented by an instance of this object is incremented at most once per transmission attempt, even if the carrier sense condition fluctuates during a transmission attempt. This counter does not increment when the interface is operating in full-duplex mode. Discontinuities in the value of this counter can occur at re-initialization of the management system, and at other times as indicated by the value of ifCounterDiscontinuityTime. REFERENCE [IEEE 802.3 Std.], 30.3.1.1.13, aCarrierSenseErrors. |
| deferredTransmissions | long | dot3StatsDeferredTransmissions | A count of frames for which the first transmission attempt on a particular interface is delayed because the medium is busy. The count represented by an instance of this object does not include frames involved in collisions. This counter does not increment when the interface is operating in full-duplex mode. Discontinuities in the value of this counter can occur at re-initialization of the management system, and at other times as indicated by the value of ifCounterDiscontinuityTime. REFERENCE [IEEE 802.3 Std.], 30.3.1.1.9, aFramesWithDeferredXmissions. |
| duplex | int | dot3StatsDuplexStatus | The current mode of operation of the MAC entity. 'unknown' indicates that the current duplex mode could not be determined. Management control of the duplex mode is accomplished through the MAU MIB. When an interface does not support autonegotiation, or when autonegotiation is not enabled, the duplex mode is controlled using ifMauDefaultType. When autonegotiation is supported and enabled, duplex mode is controlled using ifMauAutoNegAdvertisedBits. In either case, the currently operating duplex mode is reflected both in this object and in ifMauType. Note that this object provides redundant information with ifMauType. Normally, redundant objects are discouraged. However, in this instance, it allows a management application to determine the duplex status of an interface without having to know every possible value of ifMauType. This was felt to be sufficiently valuable to justify the redundancy. REFERENCE [IEEE 802.3 Std.], 30.3.1.1.32, aDuplexStatus. |

**(3 of 21)**

| 5620 SAM counter name | Type | MIB counter name | Description |
|---|---|---|---|
| excessiveCollisions | long | dot3StatsExcessiveCollisions | A count of frames for which transmission on a particular interface fails due to excessive collisions. This counter does not increment when the interface is operating in full-duplex mode. Discontinuities in the value of this counter can occur at re-initialization of the management system, and at other times as indicated by the value of ifCounterDiscontinuityTime. REFERENCE [IEEE 802.3 Std.], 30.3.1.1.11, aFramesAbortedDueToXSColls. |
| fcsErrors | long | dot3StatsFCSErrors | A count of frames received on a particular interface that are an integral number of octets in length but do not pass the FCS check. This count does not include frames received with frame-too-long or frame-too-short error. The count represented by an instance of this object is incremented when the frameCheckError status is returned by the MAC service to the LLC (or other MAC user). Received frames for which multiple error conditions pertain are, according to the conventions of IEEE 802.3 Layer Management, counted exclusively according to the error status presented to the LLC. Note: Coding errors detected by the physical layer for speeds above 10 Mb/s will cause the frame to fail the FCS check. For interfaces operating at 10 Gb/s, this counter can roll over in less than 5 minutes if it is incrementing at its maximum rate. Since that amount of time could be less than a management station's poll cycle time, in order to avoid a loss of information, a management station is advised to poll the dot3HCStatsFCSErrors object for 10 Gb/s or faster interfaces. Discontinuities in the value of this counter can occur at re-initialization of the management system, and at other times as indicated by the value of ifCounterDiscontinuityTime. REFERENCE [IEEE 802.3 Std.], 30.3.1.1.6, aFrameCheckSequenceErrors. |

**(4 of 21)**

| 5620 SAM counter name | Type | MIB counter name | Description |
|---|---|---|---|
| frameTooLongs | long | dot3StatsFrameTooLongs | A count of frames received on a particular interface that exceed the maximum permitted frame size. The count represented by an instance of this object is incremented when the frameTooLong status is returned by the MAC service to the LLC (or other MAC user). Received frames for which multiple error conditions pertain are, according to the conventions of IEEE 802.3 Layer Management, counted exclusively according to the error status presented to the LLC. For interfaces operating at 10 Gb/s, this counter can roll over in less than 80 minutes if it is incrementing at its maximum rate. Since that amount of time could be less than a management station's poll cycle time, in order to avoid a loss of information, a management station is advised to poll the dot3HCStatsFrameTooLongs object for 10 Gb/s or faster interfaces. Discontinuities in the value of this counter can occur at re-initialization of the management system, and at other times as indicated by the value of ifCounterDiscontinuityTime. REFERENCE [IEEE 802.3 Std.], 30.3.1.1.25, aFrameTooLongErrors. |
| internalMacReceiveErrors | long | dot3StatsInternalMacReceiveErrors | A count of frames for which reception on a particular interface fails due to an internal MAC sublayer receive error. A frame is only counted by an instance of this object if it is not counted by the corresponding instance of either the dot3StatsFrameTooLongs object, the dot3StatsAlignmentErrors object, or the dot3StatsFCSErrors object. The precise meaning of the count represented by an instance of this object is implementation-specific. In particular, an instance of this object may represent a count of receive errors on a particular interface that are not otherwise counted. For interfaces operating at 10 Gb/s, this counter can roll over in less than 5 minutes if it is incrementing at its maximum rate. Since that amount of time could be less than a management station's poll cycle time, in order to avoid a loss of information, a management station is advised to poll the dot3HCStatsInternalMacReceiveErrors object for 10 Gb/s or faster interfaces. Discontinuities in the value of this counter can occur at re-initialization of the management system, and at other times as indicated by the value of ifCounterDiscontinuityTime. REFERENCE [IEEE 802.3 Std.], 30.3.1.1.15, aFramesLostDueToIntMACRcvError. |

**(5 of 21)**

| 5620 SAM counter name | Type | MIB counter name | Description |
|---|---|---|---|
| internalMacTransmitErrors | long | dot3StatsInternalMacTransmitErrors | A count of frames for which transmission on a particular interface fails due to an internal MAC sublayer transmit error. A frame is only counted by an instance of this object if it is not counted by the corresponding instance of either the dot3StatsLateCollisions object, the dot3StatsExcessiveCollisions object, or the dot3StatsCarrierSenseErrors object. The precise meaning of the count represented by an instance of this object is implementation- specific. In particular, an instance of this object may represent a count of transmission errors on a particular interface that are not otherwise counted. For interfaces operating at 10 Gb/s, this counter can roll over in less than 5 minutes if it is incrementing at its maximum rate. Since that amount of time could be less than a management station's poll cycle time, in order to avoid a loss of information, a management station is advised to poll the dot3HCStatsInternalMacTransmitErrors object for 10 Gb/s or faster interfaces. Discontinuities in the value of this counter can occur at re-initialization of the management system, and at other times as indicated by the value of ifCounterDiscontinuityTime. REFERENCE [IEEE 802.3 Std.], 30.3.1.1.12, aFramesLostDueToIntMACXmitError. |
| lateCollisions | long | dot3StatsLateCollisions | The number of times that a collision is detected on a particular interface later than one slotTime into the transmission of a packet. A (late) collision included in a count represented by an instance of this object is also considered as a (generic) collision for purposes of other collision-related statistics. This counter does not increment when the interface is operating in full-duplex mode. Discontinuities in the value of this counter can occur at re-initialization of the management system, and at other times as indicated by the value of ifCounterDiscontinuityTime. REFERENCE [IEEE 802.3 Std.], 30.3.1.1.10, aLateCollisions. |

**(6 of 21)**

| 5620 SAM counter name | Type | MIB counter name | Description |
|---|---|---|---|
| multipleCollisionFrames | long | dot3StatsMultipleCollisionFrames | A count of frames that are involved in more than one collision and are subsequently transmitted successfully. A frame that is counted by an instance of this object is also counted by the corresponding instance of either the ifOutUcastPkts, ifOutMulticastPkts, or ifOutBroadcastPkts, and is not counted by the corresponding instance of the dot3StatsSingleCollisionFrames object. This counter does not increment when the interface is operating in full-duplex mode. Discontinuities in the value of this counter can occur at re-initialization of the management system, and at other times as indicated by the value of ifCounterDiscontinuityTime. REFERENCE [IEEE 802.3 Std.], 30.3.1.1.4, aMultipleCollisionFrames. |
| singleCollisionFrames | long | dot3StatsSingleCollisionFrames | A count of frames that are involved in a single collision, and are subsequently transmitted successfully. A frame that is counted by an instance of this object is also counted by the corresponding instance of either the ifOutUcastPkts, ifOutMulticastPkts, or ifOutBroadcastPkts, and is not counted by the corresponding instance of the dot3StatsMultipleCollisionFrames object. This counter does not increment when the interface is operating in full-duplex mode. Discontinuities in the value of this counter can occur at re-initialization of the management system, and at other times as indicated by the value of ifCounterDiscontinuityTime. REFERENCE [IEEE 802.3 Std.], 30.3.1.1.3, aSingleCollisionFrames. |
| sqeTestErrors | long | dot3StatsSQETestErrors | A count of times that the SQE TEST ERROR is received on a particular interface. The SQE TEST ERROR is set in accordance with the rules for verification of the SQE detection mechanism in the PLS Carrier Sense Function as described in IEEE Std. 802.3, 2000 Edition, section 7.2.4.6. This counter does not increment on interfaces operating at speeds greater than 10 Mb/s, or on interfaces operating in full-duplex mode. Discontinuities in the value of this counter can occur at re-initialization of the management system, and at other times as indicated by the value of ifCounterDiscontinuityTime. REFERENCE [IEEE 802.3 Std.], 7.2.4.6, also 30.3.2.1.4, aSQETestErrors. |

**(7 of 21)**

| 5620 SAM counter name | Type | MIB counter name | Description |
|---|---|---|---|
| symbolErrors | long | dot3StatsSymbolErrors | For an interface operating at 100 Mb/s, the number of times there was an invalid data symbol when a valid carrier was present. For an interface operating in half-duplex mode at 1000 Mb/s, the number of times the receiving media is non-idle (a carrier event) for a period of time equal to or greater than slotTime, and during which there was at least one occurrence of an event that causes the PHY to indicate 'Data reception error' or 'carrier extend error' on the GMII. For an interface operating in full-duplex mode at 1000 Mb/s, the number of times the receiving media is non-idle (a carrier event) for a period of time equal to or greater than minFrameSize, and during which there was at least one occurrence of an event that causes the PHY to indicate 'Data reception error' on the GMII. For an interface operating at 10 Gb/s, the number of times the receiving media is non-idle (a carrier event) for a period of time equal to or greater than minFrameSize, and during which there was at least one occurrence of an event that causes the PHY to indicate 'Receive Error' on the XGMII. The count represented by an instance of this object is incremented at most once per carrier event, even if multiple symbol errors occur during the carrier event. This count does not increment if a collision is present. This counter does not increment when the interface is operating at 10 Mb/s. For interfaces operating at 10 Gb/s, this counter can roll over in less than 5 minutes if it is incrementing at its maximum rate. Since that amount of time could be less than a management station's poll cycle time, in order to avoid a loss of information, a management station is advised to poll the dot3HCStatsSymbolErrors object for 10 Gb/s or faster interfaces. Discontinuities in the value of this counter can occur at re-initialization of the management system, and at other times as indicated by the value of ifCounterDiscontinuityTime. REFERENCE [IEEE 802.3 Std.], 30.3.2.1.5, aSymbolErrorDuringCarrier. |
| **EthernetHighCapacityStats**<br>MIB table name: HC-RMON-MIB.etherStatsHighCapacityTable<br>Monitored classes:<br>• equipment.PhysicalPort<br>• equipment.ManagementPort | | | |
| packets1024to1518Octets | UINT128 | etherStatsHighCapacityPkts1024to1518Octets | The total number of packets (including bad packets) received that were between 1024 and 1518 octets in length inclusive (excluding framing bits but including FCS octets). |

**(8 of 21)**

| 5620 SAM counter name | Type | MIB counter name | Description |
|---|---|---|---|
| packets128to255Octets | UINT128 | etherStatsHighCapacityPkts128to255Octets | The total number of packets (including bad packets) received that were between 128 and 255 octets in length inclusive (excluding framing bits but including FCS octets). |
| packets256to511Octets | UINT128 | etherStatsHighCapacityPkts256to511Octets | The total number of packets (including bad packets) received that were between 256 and 511 octets in length inclusive (excluding framing bits but including FCS octets). |
| packets512to1023Octets | UINT128 | etherStatsHighCapacityPkts512to1023Octets | The total number of packets (including bad packets) received that were between 512 and 1023 octets in length inclusive (excluding framing bits but including FCS octets). |
| packets64Octets | UINT128 | etherStatsHighCapacityPkts64Octets | The total number of packets (including bad packets) received that were 64 octets in length (excluding framing bits but including FCS octets). |
| packets65to127Octets | UINT128 | etherStatsHighCapacityPkts65to127Octets | The total number of packets (including bad packets) received that were between 65 and 127 octets in length inclusive (excluding framing bits but including FCS octets). |

**(9 of 21)**

| 5620 SAM counter name | Type | MIB counter name | Description |
|---|---|---|---|
| totalOctets | UINT128 | etherStatsHighCapacityOctets | The total number of octets of data (including those in bad packets) received on the network (excluding framing bits but including FCS octets). If the network is half-duplex Fast Ethernet, this object can be used as a reasonable estimate of utilization. If greater precision is desired, the etherStatsHighCapacityPkts and etherStatsHighCapacityOctets objects should be sampled before and after a common interval. The differences in the sampled values are Pkts and Octets, respectively, and the number of seconds in the interval is Interval. These values are used to calculate the Utilization as follows: Pkts * (.96 + .64) + (Octets * .08) Utilization = ---------- Interval * 10,000 The result of this equation is the value Utilization which is the percent utilization of the ethernet segment on a scale of 0 to 100 percent. This table is not appropriate for monitoring full-duplex ethernets. If the network is a full-duplex ethernet and the mediaIndependentTable is monitoring that network, the utilization can be calculated as follows: 1) Determine the utilization of the inbound path by using the appropriate equation (for ethernet or fast ethernet) to determine the utilization, substituting mediaIndependentInPkts for etherStatsHighCapacityPkts, and mediaIndependentInOctets for etherStatsHighCapacityOctets. Call the resulting utilization inUtilization. 2) Determine the utilization of the outbound path by using the same equation to determine the utilization, substituting mediaIndependentOutPkts for etherStatsHighCapacityPkts, and mediaIndependentOutOctets for etherStatsHighCapacityOctets. Call the resulting utilization outUtilization. 3) The utilization is the maximum of inUtilization and outUtilization. This metric shows the amount of percentage of bandwidth that is left before congestion will be experienced on the link. |
| totalPackets | UINT128 | etherStatsHighCapacityPkts | The total number of packets (including bad packets, broadcast packets, and multicast packets) received. |
| **EthernetStats**<br>MIB table name: RMON-MIB.etherStatsTable<br>Monitored classes:<br>• equipment.PhysicalPort<br>• equipment.ManagementPort | | | |
| broadcastPackets | long | etherStatsBroadcastPkts | The total number of good packets received that were directed to the broadcast address. Note that this does not include multicast packets. |

**(10 of 21)**

| 5620 SAM counter name | Type | MIB counter name | Description |
|---|---|---|---|
| collisions | long | etherStatsCollisions | The best estimate of the total number of collisions on this Ethernet segment. The value returned will depend on the location of the RMON probe. Section 8.2.1.3 (10BASE-5) and section 10.3.1.3 (10BASE-2) of IEEE standard 802.3 states that a station must detect a collision, in the receive mode, if three or more stations are transmitting simultaneously. A repeater port must detect a collision when two or more stations are transmitting simultaneously. Thus a probe placed on a repeater port could record more collisions than a probe connected to a station on the same segment would. Probe location plays a much smaller role when considering 10BASE-T. 14.2.1.4 (10BASE-T) of IEEE standard 802.3 defines a collision as the simultaneous presence of signals on the DO and RD circuits (transmitting and receiving at the same time). A 10BASE-T station can only detect collisions when it is transmitting. Thus probes placed on a station and a repeater, should report the same number of collisions. Note also that an RMON probe inside a repeater should ideally report collisions between the repeater and one or more other hosts (transmit collisions as defined by IEEE 802.3k) plus receiver collisions observed on any coax segments to which the repeater is connected. |
| crcAlignErrors | long | etherStatsCRCAlignErrors | The total number of packets received that had a length (excluding framing bits, but including FCS octets) of between 64 and 1518 octets, inclusive, but had either a bad Frame Check Sequence (FCS) with an integral number of octets (FCS Error) or a bad FCS with a non-integral number of octets (Alignment Error). |
| dropEvents | long | etherStatsDropEvents | The total number of events in which packets were dropped by the probe due to lack of resources. Note that this number is not necessarily the number of packets dropped; it is just the number of times this condition has been detected. |
| fragments | long | etherStatsFragments | The total number of packets received that were less than 64 octets in length (excluding framing bits but including FCS octets) and had either a bad Frame Check Sequence (FCS) with an integral number of octets (FCS Error) or a bad FCS with a non-integral number of octets (Alignment Error). Note that it is entirely normal for etherStatsFragments to increment. This is because it counts both runts (which are normal occurrences due to collisions) and noise hits. |

**(11 of 21)**

| 5620 SAM counter name | Type | MIB counter name | Description |
|---|---|---|---|
| jabbers | long | etherStatsJabbers | The total number of packets received that were longer than 1518 octets (excluding framing bits, but including FCS octets), and had either a bad Frame Check Sequence (FCS) with an integral number of octets (FCS Error) or a bad FCS with a non-integral number of octets (Alignment Error). Note that this definition of jabber is different than the definition in IEEE-802.3 section 8.2.1.5 (10BASE5) and section 10.3.1.4 (10BASE2). These documents define jabber as the condition where any packet exceeds 20 ms. The allowed range to detect jabber is between 20 ms and 150 ms. |
| multicastPackets | long | etherStatsMulticastPkts | The total number of good packets received that were directed to a multicast address. Note that this number does not include packets directed to the broadcast address. |
| oversizePackets | long | etherStatsOversizePkts | The total number of packets received that were longer than 1518 octets (excluding framing bits, but including FCS octets) and were otherwise well formed. |
| packets1024to1518Octets | long | etherStatsPkts1024to1518Octets | The total number of packets (including bad packets) received that were between 1024 and 1518 octets in length inclusive (excluding framing bits but including FCS octets). |
| packets128to255Octets | long | etherStatsPkts128to255Octets | The total number of packets (including bad packets) received that were between 128 and 255 octets in length inclusive (excluding framing bits but including FCS octets). |
| packets256to511Octets | long | etherStatsPkts256to511Octets | The total number of packets (including bad packets) received that were between 256 and 511 octets in length inclusive (excluding framing bits but including FCS octets). |
| packets512to1023Octets | long | etherStatsPkts512to1023Octets | The total number of packets (including bad packets) received that were between 512 and 1023 octets in length inclusive (excluding framing bits but including FCS octets). |
| packets64Octets | long | etherStatsPkts64Octets | The total number of packets (including bad packets) received that were 64 octets in length (excluding framing bits but including FCS octets). |
| packets65to127Octets | long | etherStatsPkts65to127Octets | The total number of packets (including bad packets) received that were between 65 and 127 octets in length inclusive (excluding framing bits but including FCS octets). |

**(12 of 21)**

| 5620 SAM counter name | Type | MIB counter name | Description |
|---|---|---|---|
| totalOctets | long | etherStatsOctets | The total number of octets of data (including those in bad packets) received on the network (excluding framing bits but including FCS octets). This object can be used as a reasonable estimate of 10-Megabit ethernet utilization. If greater precision is desired, the etherStatsPkts and etherStatsOctets objects should be sampled before and after a common interval. The differences in the sampled values are Pkts and Octets, respectively, and the number of seconds in the interval is Interval. These values are used to calculate the Utilization as follows: Pkts * (9.6 + 6.4) + (Octets * .8) Utilization = ---------- Interval * 10,000 The result of this equation is the value Utilization which is the percent utilization of the ethernet segment on a scale of 0 to 100 percent. |
| totalPackets | long | etherStatsPkts | The total number of packets (including bad packets, broadcast packets, and multicast packets) received. |
| undersizePackets | long | etherStatsUndersizePkts | The total number of packets received that were less than 64 octets long (excluding framing bits, but including FCS octets) and were otherwise well formed. |
| **OtuIfStats**<br>MIB table name: TIMETRA-OTU-MIB.tmnxOtuIfRawStatsTable<br>Monitored class: equipment.PhysicalPort | | | |
| fecCorrOnes | long | tmnxOtuIfRawStatsFECCorrOnes | The value of tmnxOtuIfRawStatsFECCorrOnes indicates the number of Forward Error Correction (FEC) corrected ones. |
| fecCorrZeros | long | tmnxOtuIfRawStatsFECCorrZeros | The value of tmnxOtuIfRawStatsFECCorrZeros indicates the number of Forward Error Correction (FEC) corrected zeros. |
| fecSes | long | tmnxOtuIfRawStatsFECSES | The value of tmnxOtuIfRawStatsFECSES indicates the number of Forward Error Correction (FEC) Severely Errors Seconds (SES). |
| fecUncorrSr | long | tmnxOtuIfRawStatsFECUncorrSR | The value of tmnxOtuIfRawStatsFECUncorrSR indicates the number of Forward Error Correction (FEC) Uncorrectable Sub-Rows. |
| hcFecCorrOnes | UINT128 | tmnxOtuIfRawStatsHCFECCorrOnes | The value of tmnxOtuIfRawStatsFECCorrOnes indicates the High Capacity number of Forward Error Correction (FEC) corrected ones. |
| hcFecCorrZeros | UINT128 | tmnxOtuIfRawStatsHCFECCorrZeros | The value of tmnxOtuIfRawStatsHCFECCorrZeros indicates the High Capacity number of Forward Error Correction (FEC) corrected zeros. |

**(13 of 21)**

| 5620 SAM counter name | Type | MIB counter name | Description |
|---|---|---|---|
| hcFecUncorrSr | UINT128 | tmnxOtuIfRawStatsHCFEC UncorrSR | The value of tmnxOtuIfRawStatsHCFECUncorrSR indicates the High Capacity number of Forward Error Correction (FEC) Uncorrectable Sub-Rows. |
| hcPmBei | UINT128 | tmnxOtuIfRawStatsHCPM BEI | The value of tmnxOtuIfRawStatsPMBEI indicates the High Capacity number of Path Monitoring (PM) Backward Error Indication (BEI) errors. |
| hcPmBip8 | UINT128 | tmnxOtuIfRawStatsHCPM BIP8 | The value of tmnxOtuIfRawStatsHCPMBIP8 indicates the High Capacity number of Path Monitoring (PM) BIP8 errors. |
| hcSmBei | UINT128 | tmnxOtuIfRawStatsHCSM BEI | The value of tmnxOtuIfRawStatsHCSMBEI indicates the High Capacity number of Section Monitoring (SM) Backward Error Indication (BEI) errors. |
| hcSmBip8 | UINT128 | tmnxOtuIfRawStatsHCSM BIP8 | The value of tmnxOtuIfRawStatsHCSMBIP8 indicates the High Capacity number of Section Monitoring (SM) BIP8 errors. |
| ofFecCorrOnes | long | tmnxOtuIfRawStatsOFFEC CorrOnes | The value of tmnxOtuIfRawStatsFECCorrOnes indicates the number of times the tmnxOtuIfRawStatsFECCorrOnes overflowed. |
| ofFecCorrZeros | long | tmnxOtuIfRawStatsOFFEC CorrZeros | The value of tmnxOtuIfRawStatsOFFECCorrZeros indicates the number of times the tmnxOtuIfRawStatsFECCorrZeros overflowed. |
| ofFecUncorrSr | long | tmnxOtuIfRawStatsOFFEC UncorrSR | The value of tmnxOtuIfRawStatsOFFECUncorrSR indicates the number of times the tmnxOtuIfRawStatsFECUncorrSR overflowed. |
| ofPmBei | long | tmnxOtuIfRawStatsOFPM BEI | The value of tmnxOtuIfRawStatsOFPMBEI indicates the number of times tmnxOtuIfRawStatsPMBEI overflowed. |
| ofPmBip8 | long | tmnxOtuIfRawStatsOFPM BIP8 | The value of tmnxOtuIfRawStatsOFPMBIP8 indicates the number of times the tmnxOtuIfRawStatsPMBIP8 overflowed. |
| ofSmBei | long | tmnxOtuIfRawStatsOFSMB EI | The value of tmnxOtuIfRawStatsOFSMBEI indicates the number of times the tmnxOtuIfRawStatsSMBEI overflowed. |
| ofSmBip8 | long | tmnxOtuIfRawStatsOFSMB IP8 | The value of tmnxOtuIfRawStatsOFSMBIP8 indicates the number of times the tmnxOtuIfRawStatsSMBIP8 overflowed. |
| pmBei | long | tmnxOtuIfRawStatsPMBEI | The value of tmnxOtuIfRawStatsPMBEI indicates the number of Path Monitoring (PM) Backward Error Indication (BEI) errors. |
| pmBip8 | long | tmnxOtuIfRawStatsPMBIP 8 | The value of tmnxOtuIfRawStatsPMBIP8 indicates the number of Path Monitoring (PM) BIP8 errors. |

**(14 of 21)**

| 5620 SAM counter name | Type | MIB counter name | Description |
|---|---|---|---|
| pmSes | long | tmnxOtuIfRawStatsPMSES | The value of tmnxOtuIfRawStatsPMSES indicates the number of Path Monitoring (PM) Severely Errored Seconds (SES). |
| smBei | long | tmnxOtuIfRawStatsSMBEI | The value of tmnxOtuIfRawStatsSMBEI indicates the number of Section Monitoring (SM) Backward Error Indication (BEI) errors. |
| smBip8 | long | tmnxOtuIfRawStatsSMBIP8 | The value of tmnxOtuIfRawStatsSMBIP8 indicates the number of Section Monitoring (SM) BIP8 errors. |
| smSes | long | tmnxOtuIfRawStatsSMSES | The value of tmnxOtuIfRawStatsSMSES indicates the number of Section Monitoring (SM) Severely Errored Seconds (SES). |
| **PortEgrQosQueueStat**<br>MIB table name: TIMETRA-PORT-MIB.tmnxPortEgrQosQStatTable<br>Monitored class: ethernetequipment.AccessEgrQGroup | | | |
| portEgrQosQStatDpdInProfOcts | UINT128 | tmnxPortEgrQosQStatDpdInProfOcts | The value of tmnxPortEgrQosQStatDpdInProfOcts indicates the number of in-profile octets discarded by the egress Qchip due to: MBS exceeded, buffer pool limit exceeded, etc. |
| portEgrQosQStatDpdInProfPkts | UINT128 | tmnxPortEgrQosQStatDpdInProfPkts | The value of tmnxPortEgrQosQStatDpdInProfPkts indicates the number of in-profile packets discarded by the egress Qchip due to: MBS exceeded, buffer pool limit exceeded, etc. |
| portEgrQosQStatDpdOutProfOcts | UINT128 | tmnxPortEgrQosQStatDpdOutProfOcts | The value of tmnxPortEgrQosQStatDpdOutProfOcts indicates the number of out-of-profile octets discarded by the egress Qchip due to: MBS exceeded, buffer pool limit exceeded, etc. |
| portEgrQosQStatDpdOutProfPkts | UINT128 | tmnxPortEgrQosQStatDpdOutProfPkts | The value of tmnxPortEgrQosQStatDpdOutProfPkts indicates the number of out-of-profile packets discarded by the egress Qchip due to: MBS exceeded, buffer pool limit exceeded, etc. |
| portEgrQosQStatFwdInProfOcts | UINT128 | tmnxPortEgrQosQStatFwdInProfOcts | The value of tmnxPortEgrQosQStatFwdInProfOcts indicates the number of in-profile octets (rate below CIR) forwarded by the egress Qchip. |
| portEgrQosQStatFwdInProfPkts | UINT128 | tmnxPortEgrQosQStatFwdInProfPkts | The value of tmnxPortEgrQosQStatFwdInProfPkts indicates the number of in-profile packets (rate below CIR) forwarded by the egress Qchip. |
| portEgrQosQStatFwdOutProfOcts | UINT128 | tmnxPortEgrQosQStatFwdOutProfOcts | The value of tmnxPortEgrQosQStatFwdOutProfOcts indicates the number of out-of-profile octets (rate above CIR) forwarded by the egress Qchip. |

**(15 of 21)**

| 5620 SAM counter name | Type | MIB counter name | Description |
|---|---|---|---|
| portEgrQosQStatFwdOutProfPkts | UINT128 | tmnxPortEgrQosQStatFwdOutProfPkts | The value of tmnxPortEgrQosQStatFwdOutProfPkts indicates the number of out-of-profile packets (rate above CIR) forwarded by the egress Qchip. |
| portEgrQosQStatQueueId | long | tmnxPortEgrQosQStatQueueId | The value of tmnxPortEgrQosQStatQueueId specifies the queue-group queue ID which is used as the fourth index to the table entry. |
| **PortIngQosQueueStat**<br>MIB table name: TIMETRA-PORT-MIB.tmnxPortIngQosQStatTable<br>Monitored class: ethernetequipment.AccessIngrQGroup | | | |
| portIngQosQStatDpdHiPrioOcts | UINT128 | tmnxPortIngQosQStatDpdHiPrioOcts | The value of tmnxPortIngQosQStatDpdHiPrioOcts indicates the number of high priority octets, as determined by the port ingress QoS policy, dropped by the Qchip due to: MBS exceeded, buffer pool limit exceeded, etc. |
| portIngQosQStatDpdHiPrioPkts | UINT128 | tmnxPortIngQosQStatDpdHiPrioPkts | The value of tmnxPortIngQosQStatDpdHiPrioPkts indicates the number of high priority packets, as determined by the port ingress QoS policy, dropped by the Qchip due to: MBS exceeded, buffer pool limit exceeded, etc. |
| portIngQosQStatDpdLoPrioOcts | UINT128 | tmnxPortIngQosQStatDpdLoPrioOcts | The value of tmnxPortIngQosQStatDpdLoPrioOcts indicates the number of low priority octets, as determined by the port ingress QoS policy, dropped by the Qchip due to: MBS exceeded, buffer pool limit exceeded, etc. |
| portIngQosQStatDpdLoPrioPkts | UINT128 | tmnxPortIngQosQStatDpdLoPrioPkts | The value of tmnxPortIngQosQStatDpdLoPrioPkts indicates the number of low priority packets, as determined by the port ingress QoS policy, dropped by the Qchip due to: MBS exceeded, buffer pool limit exceeded, etc. |
| portIngQosQStatFwdInProfOcts | UINT128 | tmnxPortIngQosQStatFwdInProfOcts | The value of tmnxPortIngQosQStatFwdInProfOcts indicates the number of in-profile octets (rate below CIR) forwarded by the ingress Qchip. |
| portIngQosQStatFwdInProfPkts | UINT128 | tmnxPortIngQosQStatFwdInProfPkts | The value of tmnxPortIngQosQStatFwdInProfPkts indicates the number of in-profile packets (rate below CIR) forwarded by the ingress Qchip. |
| portIngQosQStatFwdOutProfOcts | UINT128 | tmnxPortIngQosQStatFwdOutProfOcts | The value of tmnxPortIngQosQStatFwdOutProfOcts indicates the number of out-of-profile octets (rate above CIR) forwarded by the ingress Qchip. |

**(16 of 21)**

| 5620 SAM counter name | Type | MIB counter name | Description |
|---|---|---|---|
| portIngQosQStatFwdOutProfPkts | UINT128 | tmnxPortIngQosQStatFwdOutProfPkts | The value of tmnxPortIngQosQStatFwdOutProfPkts indicates the number of out-of-profile packets (rate above CIR) forwarded by the ingress Qchip. |
| portIngQosQStatOffHiPrioOcts | UINT128 | tmnxPortIngQosQStatOffHiPrioOcts | The value of tmnxPortIngQosQStatOffHiPrioOcts indicates the number of high priority octets, as determined by the port ingress QoS policy, offered by the Pchip to the Qchip. |
| portIngQosQStatOffHiPrioPkts | UINT128 | tmnxPortIngQosQStatOffHiPrioPkts | The value of tmnxPortIngQosQStatOffHiPrioPkts indicates the number of high priority packets, as determined by the port ingress QoS policy, offered by the Pchip to the Qchip. |
| portIngQosQStatOffLoPrioOcts | UINT128 | tmnxPortIngQosQStatOffLoPrioOcts | The value of tmnxPortIngQosQStatOffLoPrioOcts indicates the number of low priority octets, as determined by the port ingress QoS policy, offered by the Pchip to the Qchip. |
| portIngQosQStatOffLoPrioPkts | UINT128 | tmnxPortIngQosQStatOffLoPrioPkts | The value of tmnxPortIngQosQStatOffLoPrioPkts indicates the number of low priority packets, as determined by the port ingress QoS policy, offered by the Pchip to the Qchip. |
| portIngQosQStatQueueId | long | tmnxPortIngQosQStatQueueId | The value of tmnxPortIngQosQStatQueueId specifies the queue-group queue ID which is used as the fourth index to the table entry. |
| portIngQosQStatUncolOctsOff | UINT128 | tmnxPortIngQosQStatUncolOctsOff | The value of tmnxPortIngQosQStatUncolOctsOff indicates the number of uncolored octets offered to the ingress Qchip. |
| portIngQosQStatUncolPktsOff | UINT128 | tmnxPortIngQosQStatUncolPktsOff | The value of tmnxPortIngQosQStatUncolPktsOff indicates the number of uncolored packets offered to the ingress Qchip. |
| **PortNetEgrQueueStat**<br>MIB table name: TIMETRA-PORT-MIB.tmnxPortNetEgrQStatTable<br>Monitored class: ethernetequipment.NetworkEgrQGroup | | | |
| portNetEgrQDroInProfOcts | UINT128 | tmnxPortNetEgrQDroInProfOcts | The value of tmnxPortNetEgrQDroInProfOcts indicates the number of conforming network egress octets dropped on this port using this queue-group queue. |
| portNetEgrQDroInProfPkts | UINT128 | tmnxPortNetEgrQDroInProfPkts | The value of tmnxPortNetEgrQDroInProfPkts indicates the number of conforming network egress packets dropped on this port using this queue-group queue. |

**(17 of 21)**

| 5620 SAM counter name | Type | MIB counter name | Description |
|---|---|---|---|
| portNetEgrQDroOutProfOcts | UINT128 | tmnxPortNetEgrQDroOutProfOcts | The value of tmnxPortNetEgrQDroOutProfOcts indicates the number of exceeding network egress octets dropped on this port using this queue-group queue. |
| portNetEgrQDroOutProfPkts | UINT128 | tmnxPortNetEgrQDroOutProfPkts | The value of tmnxPortNetEgrQDroOutProfPkts indicates the number of exceeding network egress packets dropped on this port using this queue-group queue. |
| portNetEgrQFwdInProfOcts | UINT128 | tmnxPortNetEgrQFwdInProfOcts | The value of tmnxPortNetEgrQFwdInProfOcts indicates the number of conforming network egress octets forwarded on this port using this queue-group queue. |
| portNetEgrQFwdInProfPkts | UINT128 | tmnxPortNetEgrQFwdInProfPkts | The value of tmnxPortNetEgrQFwdInProfPkts indicates the number of conforming network egress packets forwarded on this port using this queue-group queue. |
| portNetEgrQFwdOutProfOcts | UINT128 | tmnxPortNetEgrQFwdOutProfOcts | The value of tmnxPortNetEgrQFwdOutProfOcts indicates the number of exceeding network egress octets forwarded on this port using this queue-group queue. |
| portNetEgrQFwdOutProfPkts | UINT128 | tmnxPortNetEgrQFwdOutProfPkts | The value of tmnxPortNetEgrQFwdOutProfPkts indicates the number of exceeding network egress packets forwarded on this port using this queue-group queue. |
| portNetEgrQStatQueueId | long | tmnxPortEgrQosQStatQueueId | The value of tmnxPortEgrQosQStatQueueId specifies the queue-group queue ID which is used as the fourth index to the table entry. |
| **QosDroppedOctetStats**<br>MIB table name: TIMETRA-PORT-MIB.tmnxPortIngrMdaQosStatTable<br>Monitored class: equipment.PhysicalPort | | | |
| qosClassifier0DroppedOctets | UINT128 | tmnxPortIngrMdaQos00StatDropOcts | tmnxPortIngrMdaQos00StatDropOcts indicates the number of octets dropped on the oversubscribed MDA for given Qos classifier result because of an overload condition on the MDA. |
| qosClassifier10DroppedOctets | UINT128 | tmnxPortIngrMdaQos10StatDropOcts | tmnxPortIngrMdaQos10StatDropOcts indicates the number of octets dropped on the oversubscribed MDA for given Qos classifier result because of an overload condition on the MDA. |
| qosClassifier11DroppedOctets | UINT128 | tmnxPortIngrMdaQos11StatDropOcts | tmnxPortIngrMdaQos11StatDropOcts indicates the number of octets dropped on the oversubscribed MDA for given Qos classifier result because of an overload condition on the MDA. |

**(18 of 21)**

| 5620 SAM counter name | Type | MIB counter name | Description |
|---|---|---|---|
| qosClassifier12DroppedOctets | UINT128 | tmnxPortIngrMdaQos12StatDropOcts | tmnxPortIngrMdaQos12StatDropOcts indicates the number of octets dropped on the oversubscribed MDA for given Qos classifier result because of an overload condition on the MDA. |
| qosClassifier13DroppedOctets | UINT128 | tmnxPortIngrMdaQos13StatDropOcts | tmnxPortIngrMdaQos13StatDropOcts indicates the number of octets dropped on the oversubscribed MDA for given Qos classifier result because of an overload condition on the MDA. |
| qosClassifier14DroppedOctets | UINT128 | tmnxPortIngrMdaQos14StatDropOcts | tmnxPortIngrMdaQos14StatDropOcts indicates the number of octets dropped on the oversubscribed MDA for given Qos classifier result because of an overload condition on the MDA. |
| qosClassifier15DroppedOctets | UINT128 | tmnxPortIngrMdaQos15StatDropOcts | tmnxPortIngrMdaQos15StatDropOcts indicates the number of octets dropped on the oversubscribed MDA for given Qos classifier result because of an overload condition on the MDA. |
| qosClassifier1DroppedOctets | UINT128 | tmnxPortIngrMdaQos01StatDropOcts | tmnxPortIngrMdaQos01StatDropOcts indicates the number of octets dropped on the oversubscribed MDA for given Qos classifier result because of an overload condition on the MDA. |
| qosClassifier2DroppedOctets | UINT128 | tmnxPortIngrMdaQos02StatDropOcts | tmnxPortIngrMdaQos02StatDropOcts indicates the number of octets dropped on the oversubscribed MDA for given Qos classifier result because of an overload condition on the MDA. |
| qosClassifier3DroppedOctets | UINT128 | tmnxPortIngrMdaQos03StatDropOcts | tmnxPortIngrMdaQos03StatDropOcts indicates the number of octets dropped on the oversubscribed MDA for given Qos classifier result because of an overload condition on the MDA. |
| qosClassifier4DroppedOctets | UINT128 | tmnxPortIngrMdaQos04StatDropOcts | tmnxPortIngrMdaQos04StatDropOcts indicates the number of octets dropped on the oversubscribed MDA for given Qos classifier result because of an overload condition on the MDA. |
| qosClassifier5DroppedOctets | UINT128 | tmnxPortIngrMdaQos05StatDropOcts | tmnxPortIngrMdaQos05StatDropOcts indicates the number of octets dropped on the oversubscribed MDA for given Qos classifier result because of an overload condition on the MDA. |
| qosClassifier6DroppedOctets | UINT128 | tmnxPortIngrMdaQos06StatDropOcts | tmnxPortIngrMdaQos06StatDropOcts indicates the number of octets dropped on the oversubscribed MDA for given Qos classifier result because of an overload condition on the MDA. |
| qosClassifier7DroppedOctets | UINT128 | tmnxPortIngrMdaQos07StatDropOcts | tmnxPortIngrMdaQos07StatDropOcts indicates the number of octets dropped on the oversubscribed MDA for given Qos classifier result because of an overload condition on the MDA. |

**(19 of 21)**

| 5620 SAM counter name | Type | MIB counter name | Description |
|---|---|---|---|
| qosClassifier8DroppedOctets | UINT128 | tmnxPortIngrMdaQos08StatDropOcts | tmnxPortIngrMdaQos08StatDropOcts indicates the number of octets dropped on the oversubscribed MDA for given Qos classifier result because of an overload condition on the MDA. |
| qosClassifier9DroppedOctets | UINT128 | tmnxPortIngrMdaQos09StatDropOcts | tmnxPortIngrMdaQos09StatDropOcts indicates the number of octets dropped on the oversubscribed MDA for given Qos classifier result because of an overload condition on the MDA. |
| **QosDroppedPacketStats**<br>MIB table name: TIMETRA-PORT-MIB.tmnxPortIngrMdaQosStatTable<br>Monitored class: equipment.PhysicalPort | | | |
| qosClassifier0DroppedPackets | UINT128 | tmnxPortIngrMdaQos00StatDropPkts | tmnxPortIngrMdaQos00StatDropPkts indicates the number of packets dropped on the oversubscribed MDA for given Qos classifier result because of an overload condition on the MDA. |
| qosClassifier10DroppedPackets | UINT128 | tmnxPortIngrMdaQos10StatDropPkts | tmnxPortIngrMdaQos10StatDropPkts indicates the number of packets dropped on the oversubscribed MDA for given Qos classifier result because of an overload condition on the MDA. |
| qosClassifier11DroppedPackets | UINT128 | tmnxPortIngrMdaQos11StatDropPkts | tmnxPortIngrMdaQos11StatDropPkts indicates the number of packets dropped on the oversubscribed MDA for given Qos classifier result because of an overload condition on the MDA. |
| qosClassifier12DroppedPackets | UINT128 | tmnxPortIngrMdaQos12StatDropPkts | tmnxPortIngrMdaQos12StatDropPkts indicates the number of packets dropped on the oversubscribed MDA for given Qos classifier result because of an overload condition on the MDA. |
| qosClassifier13DroppedPackets | UINT128 | tmnxPortIngrMdaQos13StatDropPkts | tmnxPortIngrMdaQos13StatDropPkts indicates the number of packets dropped on the oversubscribed MDA for given Qos classifier result because of an overload condition on the MDA. |
| qosClassifier14DroppedPackets | UINT128 | tmnxPortIngrMdaQos14StatDropPkts | tmnxPortIngrMdaQos14StatDropPkts indicates the number of packets dropped on the oversubscribed MDA for given Qos classifier result because of an overload condition on the MDA. |
| qosClassifier15DroppedPackets | UINT128 | tmnxPortIngrMdaQos15StatDropPkts | tmnxPortIngrMdaQos15StatDropPkts indicates the number of packets dropped on the oversubscribed MDA for given Qos classifier result because of an overload condition on the MDA. |
| qosClassifier1DroppedPackets | UINT128 | tmnxPortIngrMdaQos01StatDropPkts | tmnxPortIngrMdaQos01StatDropPkts indicates the number of packets dropped on the oversubscribed MDA for given Qos classifier result because of an overload condition on the MDA. |

**(20 of 21)**

| 5620 SAM counter name | Type | MIB counter name | Description |
|---|---|---|---|
| qosClassifier2DroppedPackets | UINT128 | tmnxPortIngrMdaQos02StatDropPkts | tmnxPortIngrMdaQos02StatDropPkts indicates the number of packets dropped on the oversubscribed MDA for given Qos classifier result because of an overload condition on the MDA. |
| qosClassifier3DroppedPackets | UINT128 | tmnxPortIngrMdaQos03StatDropPkts | tmnxPortIngrMdaQos03StatDropPkts indicates the number of packets dropped on the oversubscribed MDA for given Qos classifier result because of an overload condition on the MDA. |
| qosClassifier4DroppedPackets | UINT128 | tmnxPortIngrMdaQos04StatDropPkts | tmnxPortIngrMdaQos04StatDropPkts indicates the number of packets dropped on the oversubscribed MDA for given Qos classifier result because of an overload condition on the MDA. |
| qosClassifier5DroppedPackets | UINT128 | tmnxPortIngrMdaQos05StatDropPkts | tmnxPortIngrMdaQos05StatDropPkts indicates the number of packets dropped on the oversubscribed MDA for given Qos classifier result because of an overload condition on the MDA. |
| qosClassifier6DroppedPackets | UINT128 | tmnxPortIngrMdaQos06StatDropPkts | tmnxPortIngrMdaQos06StatDropPkts indicates the number of packets dropped on the oversubscribed MDA for given Qos classifier result because of an overload condition on the MDA. |
| qosClassifier7DroppedPackets | UINT128 | tmnxPortIngrMdaQos07StatDropPkts | tmnxPortIngrMdaQos07StatDropPkts indicates the number of packets dropped on the oversubscribed MDA for given Qos classifier result because of an overload condition on the MDA. |
| qosClassifier8DroppedPackets | UINT128 | tmnxPortIngrMdaQos08StatDropPkts | tmnxPortIngrMdaQos08StatDropPkts indicates the number of packets dropped on the oversubscribed MDA for given Qos classifier result because of an overload condition on the MDA. |
| qosClassifier9DroppedPackets | UINT128 | tmnxPortIngrMdaQos09StatDropPkts | tmnxPortIngrMdaQos09StatDropPkts indicates the number of packets dropped on the oversubscribed MDA for given Qos classifier result because of an overload condition on the MDA. |

**(21 of 21)**

### Table A-14 fr statistics

| 5620 SAM counter name | Type | MIB counter name | Description |
|---|---|---|---|
| **InterfaceStats**<br>MIB table name: TIMETRA-PORT-MIB.tmnxFRDlcmiTable<br>Monitored class: fr.Interface | | | |
| lmiDiscardedMessages | long | tmnxFRDlcmiDiscardedMsgs | tmnxFRDlcmiDiscardedMsgs indicates the number of times the LMI agent discarded a received message because it wasn't expecting it, the type of message was incorrect, or the contents of the message were invalid. |

**(1 of 2)**

| 5620 SAM counter name | Type | MIB counter name | Description |
|---|---|---|---|
| lmiInvalidRxSeqNumMessages | long | tmnxFRDlcmiInvRxSeqNumMsgs | tmnxFRDlcmiInvRxSeqNumMsgs indicates the number of times the LMI agent received a message with an invalid receive sequence number: i.e. a sequence number that does not match the last transmitted sequence number of the agent. |
| lmiRxStatusEnquiryMessages | long | tmnxFRDlcmiRxStatusEnqMsgs | tmnxFRDlcmiRxStatusEnqMsgs indicates the number of LMI Status Enquiry messages received on this Frame Relay interface. |
| lmiRxStatusMessages | long | tmnxFRDlcmiRxStatusMsgs | tmnxFRDlcmiRxStatusMsgs indicates the number of LMI Status messages received on this Frame Relay interface. |
| lmiStatusEnquiryMsgTimeouts | long | tmnxFRDlcmiStatusEnqMsgTimeouts | tmnxFRDlcmiStatusEnqMsgTimeouts indicates the number of times the LMI agent did not receive a Status Enquiry message within the allotted time. |
| lmiStatusMsgTimeouts | long | tmnxFRDlcmiStatusMsgTimeouts | tmnxFRDlcmiStatusMsgTimeouts indicates the number of times the LMI agent did not receive a Status message within the allotted time. |
| lmiTxStatusEnquiryMessages | long | tmnxFRDlcmiTxStatusEnqMsgs | tmnxFRDlcmiTxStatusEnqMsgs indicates the number of LMI Status Enquiry messages transmitted on this Frame Relay interface. |
| lmiTxStatusMessages | long | tmnxFRDlcmiTxStatusMsgs | tmnxFRDlcmiTxStatusMsgs indicates the number of LMI Status messages transmitted on this Frame Relay interface. |

**(2 of 2)**

**Table A-15 gsmp statistics**

| 5620 SAM counter name | Type | MIB counter name | Description |
|---|---|---|---|
| **GsmpSessionStats**<br>MIB table name: TIMETRA-GSMP-MIB.tmnxAncpSessionStatsTable<br>Monitored class: gsmp.GsmpGroupNeighborSession | | | |
| ancpAckReceived | long | tmnxAncpSesStatRxAck | The value of tmnxAncpSesStatRxAck indicates the number of GSMP ACK messages received in this ANCP session. |
| ancpAckTransmitted | long | tmnxAncpSesStatTxAck | The value of tmnxAncpSesStatTxAck indicates the number of GSMP ACK messages that were transmitted to the ANCP neighbor in this ANCP session. |
| ancpLoopBackReceived | long | tmnxAncpSesStatRxLoopback | The value of tmnxAncpSesStatRxLoopback indicates the number of GSMP Loopback messages received in this ANCP session. |
| ancpLoopBackTransmitted | long | tmnxAncpSesStatTxLoopback | The value of tmnxAncpSesStatTxLoopback indicates the number of GSMP Loopback messages that were transmitted to the ANCP neighbor in this ANCP session. |

**(1 of 2)**

| 5620 SAM counter name | Type | MIB counter name | Description |
|---|---|---|---|
| ancpPortDownReceived | long | tmnxAncpSesStatRxPortDown | The value of tmnxAncpSesStatRxPortDown indicates the number of GSMP 'PortDown' messages received in this ANCP session. |
| ancpPortDownTransmitted | long | tmnxAncpSesStatTxPortDown | The value of tmnxAncpSesStatTxPortDown indicates the number of GSMP 'PortDown' messages that were transmitted to the ANCP neighbor in this session. |
| ancpPortUpReceived | long | tmnxAncpSesStatRxPortUp | The value of tmnxAncpSesStatRxPortUp indicates the number of GSMP 'PortUp' messages received in this ANCP session. |
| ancpPortUpTransmitted | long | tmnxAncpSesStatTxPortUp | The value of tmnxAncpSesStatTxPortUp indicates the number of GSMP 'PortUp' messages that were transmitted to the ANCP neighbor in this session. |
| ancpRstAckReceived | long | tmnxAncpSesStatRxRstAck | The value of tmnxAncpSesStatRxRstAck indicates the number of GSMP RST ACK messages received in this ANCP session. |
| ancpRstAckTransmitted | long | tmnxAncpSesStatTxRstAck | The value of tmnxAncpSesStatTxRstAck indicates the number of GSMP RST ACK messages that were transmitted to the ANCP neighbor in this session. |
| ancpSynAckReceived | long | tmnxAncpSesStatRxSynAck | The value of tmnxAncpSesStatRxSynAck indicates the number of GSMP SYN ACK messages received in this ANCP session. |
| ancpSynAckTransmitted | long | tmnxAncpSesStatTxSynAck | The value of tmnxAncpSesStatTxSynAck indicates the number of GSMP SYN ACK messages that were transmitted to the ANCP neighbor in this ANCP session. |
| ancpSynReceived | long | tmnxAncpSesStatRxSyn | The value of tmnxAncpSesStatRxSyn indicates the number of GSMP SYN messages received in this ANCP session. |
| ancpSynTransmitted | long | tmnxAncpSesStatTxSyn | The value of tmnxAncpSesStatTxSyn indicates the number of GSMP SYN messages that were transmitted to the ANCP neighbor in this ANCP session. |
| ancpTransmittedDropped | long | tmnxAncpSesStatTxDrop | The value of tmnxAncpSesStatTxDrop indicates the number of GSMP protocol messages that were created by the system in order for them to be sent to the ACNP neighbor, but were never transmitted. |

**(2 of 2)**

### Table A-16 igmp statistics

| 5620 SAM counter name | Type | MIB counter name | Description |
|---|---|---|---|
| **InterfaceStats**<br>MIB table name: TIMETRA-IGMP-MIB.vRtrIgmpIfStatsTable<br>Monitored class: igmp.Interface | | | |

**(1 of 4)**

| 5620 SAM counter name | Type | MIB counter name | Description |
|---|---|---|---|
| importPolicyDrops | long | vRtrIgmpIfImportPolicyDrops | The value of vRtrIgmpIfImportPolicyDrops indicates the total number of times IGMP protocol instance matched the host IP address or group/source addresses specified in the import policy vRtrIgmpIfImportPolicy. |
| mcacPolicyDrops | long | vRtrIgmpIfStatsMcacPolicyDrops | The value of the object vRtrIgmpIfStatsMcacPolicyDrops indicates the number times an IGMP Group is dropped because of applying a multicast CAC policy on this interface. |
| rxBadChecksumPkts | long | vRtrIgmpIfRxBadChecksumPkts | The value of vRtrIgmpIfRxBadChecksumPkts indicates the total number of IGMP packets with bad checksum received on this interface. |
| rxBadEncodings | long | vRtrIgmpIfRxBadEncodings | The value of vRtrIgmpIfRxBadEncodings indicates the total number of IGMP packets received on this interface which were not encoded correctly. |
| rxBadLenPkts | long | vRtrIgmpIfRxBadLenPkts | The value of vRtrIgmpIfRxBadLenPkts indicates the total number of IGMP packets with bad length received on this interface. |
| rxBadReceiveIfPkts | long | vRtrIgmpIfRxBadReceiveIfPkts | The value of vRtrIgmpIfRxBadReceiveIfPkts indicates the total number of IGMP packets incorrectly received on this interface. |
| rxGenQueries | long | vRtrIgmpIfRxGenQueries | The value of vRtrIgmpIfRxGenQueries indicates the total number of IGMP General Queries received on this interface. |
| rxGrpQueries | long | vRtrIgmpIfRxGrpQueries | The value of vRtrIgmpIfRxGrpQueries indicates the number of IGMP Group Specific Queries received on this interface. |
| rxGrpSrcQueries | long | vRtrIgmpIfRxGrpSrcQueries | The value of vRtrIgmpIfRxGrpSrcQueries indicates the number of IGMP Group and Source Specific Queries received on this interface. |
| rxLeaves | long | vRtrIgmpIfRxLeaves | The value of vRtrIgmpIfRxLeaves indicates the total number of IGMP V2 Leaves received on this interface. |
| rxNonLocal | long | vRtrIgmpIfRxNonLocal | The value of vRtrIgmpIfRxNonLocal indicates the total number of IGMP packets received from a non-local sender. |
| rxNoRtrAlertPkts | long | vRtrIgmpIfRxNoRtrAlertPkts | The value of vRtrIgmpIfRxNoRtrAlertPkts indicates the total number of IGMPv3 packets received on this interface which did not have the router alert flag set. |
| rxPktDrops | long | vRtrIgmpIfRxPktDrops | The value of vRtrIgmpIfRxPktDrops indicates the total number of IGMP packets that were received on this interface but were dropped. |

**(2 of 4)**

| 5620 SAM counter name | Type | MIB counter name | Description |
|---|---|---|---|
| rxUnknownTypePkts | long | vRtrIgmpIfRxUnknownTypePkts | The value of vRtrIgmpIfRxUnknownTypePkts indicates the total number of IGMP packets with unknown type received on this interface. |
| rxV1Reports | long | vRtrIgmpIfRxV1Reports | The value of vRtrIgmpIfRxV1Reports indicates the total number of IGMP V1 Reports received on this interface. |
| rxV2Reports | long | vRtrIgmpIfRxV2Reports | The value of vRtrIgmpIfRxV2Reports indicates the total number of IGMP V2 Reports received on this interface. |
| rxV3Reports | long | vRtrIgmpIfRxV3Reports | The value of vRtrIgmpIfRxV3Reports indicates the total number of IGMP V3 Reports received on this interface. |
| rxWrongVersions | long | vRtrIgmpIfRxWrongVersions | The value of vRtrIgmpIfRxWrongVersions indicates the total number of IGMP packets with wrong versions received on this interface. |
| statsSGTypes | long | vRtrIgmpIfStatsSGTypes | The value of vRtrIgmpIfStatsSGTypes indicates the number of entries on this interface for which the source type is 'sg'. |
| statsStarGTypes | long | vRtrIgmpIfStatsStarGTypes | vRtrIgmpIfStatsStarGTypes indicates the number of entries on this interface for which the source type is 'starG'. |
| txErrors | long | vRtrIgmpIfTxErrors | The value of vRtrIgmpIfTxErrors indicates the total number of times there was an error transmitting IGMP packets on this interface.. |
| txGenQueries | long | vRtrIgmpIfTxGenQueries | The value of vRtrIgmpIfTxGenQueries indicates the number of IGMP General Queries transmitted on this interface. |
| txGrpQueries | long | vRtrIgmpIfTxGrpQueries | The value of vRtrIgmpIfTxGrpQueries indicates the number of IGMP Group Specific Queries transmitted on this interface. |
| txGrpSrcQueries | long | vRtrIgmpIfTxGrpSrcQueries | The value of vRtrIgmpIfTxGrpSrcQueries indicates the number of IGMP Group and Source Specific Queries transmitted on this interface. |
| txLeaves | long | vRtrIgmpIfTxLeaves | The value of vRtrIgmpIfTxLeaves indicates the total number of IGMP Leaves transmitted on this interface. |
| txV1Reports | long | vRtrIgmpIfTxV1Reports | The value of vRtrIgmpIfTxV1Reports indicates the total number of IGMP V1 Reports transmitted on this interface. |
| txV2Reports | long | vRtrIgmpIfTxV2Reports | The value of vRtrIgmpIfTxV2Reports indicates the total number of IGMP V2 Reports transmitted on this interface. |
| txV3Reports | long | vRtrIgmpIfTxV3Reports | The value of vRtrIgmpIfTxV3Reports indicates the total number of IGMP V3 Reports transmitted on this interface. |
| **InterfaceStatsExtension**<br>MIB table name: TIMETRA-IGMP-MIB.vRtrIgmpIfStatsTable<br>Monitored class: igmp.Interface | | | |

**(3 of 4)**

| 5620 SAM counter name | Type | MIB counter name | Description |
|---|---|---|---|
| rxLocalScopePkts | long | vRtrIgmpIfRxLocalScopePkts | The value of the object vRtrIgmpIfRxLocalScopePkts indicates the number of IGMP packets received on the link-local scope IPv4 multicast address. |
| rxRsvdScopePkts | long | vRtrIgmpIfRxRsvdScopePkts | The value of the object vRtrIgmpIfRxRsvdScopePkts indicates the number of IGMP packets received on the reserved scope IPv4 multicast address. |

**(4 of 4)**

**Table A-17 ipsec statistics**

| 5620 SAM counter name | Type | MIB counter name | Description |
|---|---|---|---|
| **IPSecSAStats**<br>MIB table name: TIMETRA-IPSEC-MIB.tmnxIPsecSAStatsTable<br>Monitored class: ipsec.IPSecSecurityAssociation | | | |
| bytesProcessed | UINT128 | tmnxIPsecSAStatsBytesProcessed | The value of tmnxIPsecSAStatsBytesProcessed indicates the number of bytes successfully processed for this SA. |
| cryptoErrors | long | tmnxIPsecSAStatsCryptoErrors | The value of tmnxIPsecSAStatsCryptoErrors indicates the number of crypto errors encountered on this SA. The crypto errors include errors on packets where protocol does not match or if the check on authentication header length failed. |
| pktsProcessed | UINT128 | tmnxIPsecSAStatsPktsProcessed | The value of tmnxIPsecSAStatsPktsProcessed indicates the number of packets successfully processed for this SA. |
| policyErrors | long | tmnxIPsecSAStatsPolicyErrors | The value of tmnxIPsecSAStatsPolicyErrors indicates the number of policy errors encountered on this SA. The policy errors include bundled SA, selector check and policy direction error. |
| replayErrors | long | tmnxIPsecSAStatsReplayErrors | The value of tmnxIPsecSAStatsReplayErrors indicates the number of replay errors encountered on this SA. |
| saErrors | long | tmnxIPsecSAStatsSAErrors | The value of tmnxIPsecSAStatsSAErrors indicates the number of SA errors encountered on this SA. The SA errors include sequence number failure, invalid SA, ploicy version mismatch, illegal authentication algorithm, expanded packet too big, illegal configured algorithm and ttl decrement error. |
| **IPSecTunnelStats**<br>MIB table name: TIMETRA-IPSEC-MIB.tmnxIPsecTunnelStatsTable<br>Monitored class: ipsec.IPSecTunnel | | | |

**(1 of 2)**

| 5620 SAM counter name | Type | MIB counter name | Description |
|---|---|---|---|
| isakmpEstabTime | long | tmnxIPsecTunnelIsakmpEstabTime | The value of tmnxIPsecTunnelIsakmpEstabTime indicates the sysUpTime at the time the IPsec phase 1 negotiation completed. |
| isakmpNegLifeTime | long | tmnxIPsecTunnelIsakmpNegLifeTime | The value of tmnxIPsecTunnelIsakmpNegLifeTime indicates the lifetime negotiated for phase1 Ike key. |
| isakmpState | long | tmnxIPsecTunnelIsakmpState | The value of tmnxIPsecTunnelIsakmpState indicates the state of phase 1 IPsec negotiation. |
| numCtrlPktsRx | long | tmnxIPsecTunnelNumCtrlPktsRx | The value of tmnxIPsecTunnelNumCtrlPktsRx indicates the number of control packets this IPsec Tunnel has received. |
| numCtrlPktsTx | long | tmnxIPsecTunnelNumCtrlPktsTx | The value of tmnxIPsecTunnelNumCtrlPktsTx indicates the number of control packets this IPsec Tunnel has sent. |
| numCtrlRxErrors | long | tmnxIPsecTunnelNumCtrlRxErrors | The value of tmnxIPsecTunnelNumCtrlRxErrors indicates the number of control packet receive errors. |
| numCtrlTxErrors | long | tmnxIPsecTunnelNumCtrlTxErrors | The value of tmnxIPsecTunnelNumCtrlTxErrors indicates the number of control packet transmit errors. |
| numDpdAckRx | long | tmnxIPsecTunnelNumDpdAckRx | The value of tmnxIPsecTunnelNumDpdAckRx indicates the number of Dead-Peer-Detection acknowledgement packets received. |
| numDpdAckTx | long | tmnxIPsecTunnelNumDpdAckTx | The value of tmnxIPsecTunnelNumDpdAckTx indicates the number of Dead-Peer-Detection acknowledgement packets transmitted. |
| numDpdRx | long | tmnxIPsecTunnelNumDpdRx | The value of tmnxIPsecTunnelNumDpdRx indicates the number of Dead-Peer-Detection packets received. |
| numDpdTx | long | tmnxIPsecTunnelNumDpdTx | The value of tmnxIPsecTunnelNumDpdTx indicates the number of Dead-Peer-Detection packets transmitted. |
| numExpRx | long | tmnxIPsecTunnelNumExpRx | The value of tmnxIPsecTunnelNumExpRx indicates the number of DPD R-U-THERE packets that have not been acknowledged. |
| numInvalidDpdRx | long | tmnxIPsecTunnelNumInvalidDpdRx | The value of tmnxIPsecTunnelNumInvalidDpdRx indicates the number of malformed DPD R-U-THERE acknowledgement packets received. |

**(2 of 2)**

**Table A-18 isa statistics**

| 5620 SAM counter name | Type | MIB counter name | Description |
|---|---|---|---|
| **AaGroupEgrQStats**<br>MIB table name: TIMETRA-BSX-NG-MIB.tmnxBsxGrpStatusEgrQTable<br>Monitored class: isa.AaEgrQueue | | | |
| droInProfOcts | long | tmnxBsxGrpStatusEgrQDroInPOcts | The value of tmnxBsxGrpStatusEgrQDroInPOcts indicates the number of in profile bytes discarded from ingress IOMs towards the ISA-AA MDA within this group for the particular queue. |
| droInProfPkts | long | tmnxBsxGrpStatusEgrQDroInPPkts | The value of tmnxBsxGrpStatusEgrQDroInPPkts indicates the number of in profile packets discarded from ingress IOMs towards the ISA-AA MDA within this group for the particular queue. |
| droOutProfOcts | long | tmnxBsxGrpStatusEgrQDroOutPOcts | The value of tmnxBsxGrpStatusEgrQDroOutPOcts indicates the number of out of profile bytes discarded from ingress IOMs towards the ISA-AA MDA within this group for the particular queue. |
| droOutProfPkts | long | tmnxBsxGrpStatusEgrQDroOutPPkts | The value of tmnxBsxGrpStatusEgrQDroOutPPkts indicates the number of out of profile packets discarded from ingress IOMs towards the ISA-AA MDA within this group for the particular queue. |
| fwdInProfOcts | long | tmnxBsxGrpStatusEgrQFwdInPOcts | The value of tmnxBsxGrpStatusEgrQFwdInPOcts indicates the number of in profile bytes diverted from ingress IOMs towards the ISA-AA MDA within this group for the particular queue. |
| fwdInProfPkts | long | tmnxBsxGrpStatusEgrQFwdInPPkts | The value of tmnxBsxGrpStatusEgrQFwdInPPkts indicates the number of in profile packets diverted from ingress IOMs towards the ISA-AA MDA within this group for the particular queue. |
| fwdOutProfOcts | long | tmnxBsxGrpStatusEgrQFwdOutPOcts | The value of tmnxBsxGrpStatusEgrQFwdOutPOcts indicates the number of out of profile bytes diverted from ingress IOMs towards the ISA-AA MDA within this group for the particular queue. |
| fwdOutProfPkts | long | tmnxBsxGrpStatusEgrQFwdOutPPkts | The value of tmnxBsxGrpStatusEgrQFwdOutPPkts indicates the number of out of profile packets diverted from ingress IOMs towards the ISA-AA MDA within this group for the particular queue. |

**(1 of 28)**

| 5620 SAM counter name | Type | MIB counter name | Description |
|---|---|---|---|
| hCDroInProfOcts | UINT128 | tmnxBsxGrpStatusEgrQHCDroInPOcts | The value of tmnxBsxGrpStatusEgrQHCDroInPOcts indicates the number of in profile bytes discarded from ingress IOMs towards the ISA-AA MDA within this group for the particular queue. |
| hCDroInProfPkts | UINT128 | tmnxBsxGrpStatusEgrQHCDroInPPkts | The value of tmnxBsxGrpStatusEgrQHCDroInPPkts indicates the number of in profile packets discarded from ingress IOMs towards the ISA-AA MDA within this group for the particular queue. |
| hCDroOutProfOcts | UINT128 | tmnxBsxGrpStatusEgrQHCDroOutPOcts | The value of tmnxBsxGrpStatusEgrQHCDroOutPOcts indicates the number of out of profile bytes discarded from ingress IOMs towards the ISA-AA MDA within this group for the particular queue. |
| hCDroOutProfPkts | UINT128 | tmnxBsxGrpStatusEgrQHCDroOutPPkts | The value of tmnxBsxGrpStatusEgrQHCDroOutPPkts indicates the number of out of profile packets discarded from ingress IOMs towards the ISA-AA MDA within this group for the particular queue. |
| hCFwdInProfOcts | UINT128 | tmnxBsxGrpStatusEgrQHCFwdInPOcts | The value of tmnxBsxGrpStatusEgrQHCFwdInPOcts indicates the number of in profile bytes diverted from ingress IOMs towards the ISA-AA MDA within this group for the particular queue. |
| hCFwdInProfPkts | UINT128 | tmnxBsxGrpStatusEgrQHCFwdInPPkts | The value of tmnxBsxGrpStatusEgrQHCFwdInPPkts indicates the number of in profile packets diverted from ingress IOMs towards the ISA-AA MDA within this group for the particular queue. |
| hCFwdOutProfOcts | UINT128 | tmnxBsxGrpStatusEgrQHCFwdOutPOcts | The value of tmnxBsxGrpStatusEgrQHCFwdOutPOcts indicates the number of out of profile bytes diverted from ingress IOMs towards the ISA-AA MDA within this group for the particular queue. |
| hCFwdOutProfPkts | UINT128 | tmnxBsxGrpStatusEgrQHCFwdOutPPkts | The value of tmnxBsxGrpStatusEgrQHCFwdOutPPkts indicates the number of out of profile packets diverted from ingress IOMs towards the ISA-AA MDA within this group for the particular queue. |
| **AaGroupIngQStats**<br>MIB table name: TIMETRA-BSX-NG-MIB.tmnxBsxGrpStatusIngQTable<br>Monitored class: isa.AaIngQueue | | | |
| droInProfOcts | long | tmnxBsxGrpStatusIngQDroInPOcts | The value of tmnxBsxGrpStatusIngQDroInPOcts indicates the number of in profile bytes discarded towards egress IOMs from the ISA-AA MDA within this group for the particular queue. |

**(2 of 28)**

| 5620 SAM counter name | Type | MIB counter name | Description |
|---|---|---|---|
| droInProfPkts | long | tmnxBsxGrpStatusIngQDroInPPkts | The value of tmnxBsxGrpStatusIngQDroInPPkts indicates the number of in profile packets discarded towards egress IOMs from the ISA-AA MDA within this group for the particular queue. |
| droOutProfOcts | long | tmnxBsxGrpStatusIngQDroOutPOcts | The value of tmnxBsxGrpStatusIngQDroOutPOcts indicates the number of out of profile bytes discarded towards egress IOMs from the ISA-AA MDA within this group for the particular queue. |
| droOutProfPkts | long | tmnxBsxGrpStatusIngQDroOutPPkts | The value of tmnxBsxGrpStatusIngQDroOutPPkts indicates the number of out of profile packets discarded towards egress IOMs from the ISA-AA MDA within this group for the particular queue. |
| fwdInProfOcts | long | tmnxBsxGrpStatusIngQFwdInPOcts | The value of tmnxBsxGrpStatusIngQFwdInPOcts indicates the number of in profile bytes diverted towards egress IOMs from the ISA-AA MDA within this group for the particular queue. |
| fwdInProfPkts | long | tmnxBsxGrpStatusIngQFwdInPPkts | The value of tmnxBsxGrpStatusIngQFwdInPPkts indicates the number of in profile packets diverted towards egress IOMs from the ISA-AA MDA within this group for the particular queue. |
| fwdOutProfOcts | long | tmnxBsxGrpStatusIngQFwdOutPOcts | The value of tmnxBsxGrpStatusIngQFwdOutPOcts indicates the number of out of profile bytes diverted towards egress IOMs from the ISA-AA MDA within this group for the particular queue. |
| fwdOutProfPkts | long | tmnxBsxGrpStatusIngQFwdOutPPkts | The value of tmnxBsxGrpStatusIngQFwdOutPPkts indicates the number of out of profile packets diverted towards egress IOMs from the ISA-AA MDA within this group for the particular queue. |
| hCDroInProfOcts | UINT128 | tmnxBsxGrpStatusIngQHCDroInPOcts | The value of tmnxBsxGrpStatusIngQHCDroInPOcts indicates the number of in profile bytes discarded towards egress IOMs from the ISA-AA MDA within this group for the particular queue. |
| hCDroInProfPkts | UINT128 | tmnxBsxGrpStatusIngQHCDroInPPkts | The value of tmnxBsxGrpStatusIngQHCDroInPPkts indicates the number of in profile packets discarded towards egress IOMs from the ISA-AA MDA within this group for the particular queue. |

**(3 of 28)**

| 5620 SAM counter name | Type | MIB counter name | Description |
|---|---|---|---|
| hCDroOutProfOcts | UINT128 | tmnxBsxGrpStatusIngQHCDroOutPOcts | The value of tmnxBsxGrpStatusIngQHCDroOutPOcts indicates the number of out of profile bytes discarded towards egress IOMs from the ISA-AA MDA within this group for the particular queue. |
| hCDroOutProfPkts | UINT128 | tmnxBsxGrpStatusIngQHCDroOutPPkts | The value of tmnxBsxGrpStatusIngQHCDroOutPPkts indicates the number of out of profile packets discarded towards egress IOMs from the ISA-AA MDA within this group for the particular queue. |
| hCFwdInProfOcts | UINT128 | tmnxBsxGrpStatusIngQHCFwdInPOcts | The value of tmnxBsxGrpStatusIngQHCFwdInPOcts indicates the number of in profile bytes diverted towards egress IOMs from the ISA-AA MDA within this group for the particular queue. |
| hCFwdInProfPkts | UINT128 | tmnxBsxGrpStatusIngQHCFwdInPPkts | The value of tmnxBsxGrpStatusIngQHCFwdInPPkts indicates the number of in profile packets diverted towards egress IOMs from the ISA-AA MDA within this group for the particular queue. |
| hCFwdOutProfOcts | UINT128 | tmnxBsxGrpStatusIngQHCFwdOutPOcts | The value of tmnxBsxGrpStatusIngQHCFwdOutPOcts indicates the number of out of profile bytes diverted towards egress IOMs from the ISA-AA MDA within this group for the particular queue. |
| hCFwdOutProfPkts | UINT128 | tmnxBsxGrpStatusIngQHCFwdOutPPkts | The value of tmnxBsxGrpStatusIngQHCFwdOutPPkts indicates the number of out of profile packets diverted towards egress IOMs from the ISA-AA MDA within this group for the particular queue. |
| **AaSapSumStats**<br>MIB table name: TIMETRA-BSX-NG-MIB.tmnxBsxAaSubSumTable<br>Monitored class: service.AccessInterface | | | |
| activeFlowsFromSub | long | tmnxBsxAaSubSumActFlwsFmSb | The value of tmnxBsxAaSubSumActFlwsFmSb indicates the number of allowed flows in the subscriber to network direction that are active. |
| activeFlowsToSub | long | tmnxBsxAaSubSumActFlwsToSb | The value of tmnxBsxAaSubSumActFlwsToSb indicates the number of allowed flows in the network to subscriber direction that are active. |
| durationFlowsLong | UINT128 | tmnxBsxAaSubSumHCLngDurFlws | The value of tmnxBsxAaSubSumHCLngDurFlws indicates the total number of flows with a duration greater than 180 seconds, that have completed. This object is a 64-bit version of tmnxBsxAaSubSumLngDurFlws. |

**(4 of 28)**

| 5620 SAM counter name | Type | MIB counter name | Description |
|---|---|---|---|
| durationFlowsMedium | UINT128 | tmnxBsxAaSubSumHCMedDurFlws | The value of tmnxBsxAaSubSumHCMedDurFlws indicates the total number of flows with a duration less than or equal to 180 seconds, but greater than 30 seconds, that have completed. This object is a 64-bit version of tmnxBsxAaSubSumMedDurFlws. |
| durationFlowsShort | UINT128 | tmnxBsxAaSubSumHCShrtDurFlws | The value of tmnxBsxAaSubSumHCShrtDurFlws indicates the total number of flows with a duration less than or equal to 30 seconds, that have completed. This object is a 64-bit version of tmnxBsxAaSubSumShrtDurFlws. |
| flowsAdmitFromSub | UINT128 | tmnxBsxAaSubSumHCFlwsAdmFmSb | The value of tmnxBsxAaSubSumHCFlwsAdmFmSb indicates the total number of flows permitted for the subscriber to network direction. This object is a 64-bit version of tmnxBsxAaSubSumFlwsAdmFmSb. |
| flowsAdmitToSub | UINT128 | tmnxBsxAaSubSumHCFlwsAdmToSb | The value of tmnxBsxAaSubSumHCFlwsAdmToSb indicates the total number of flows permitted for the network to subscriber direction. This object is a 64-bit version of tmnxBsxAaSubSumFlwsAdmToSb. |
| flowsDenyFromSub | UINT128 | tmnxBsxAaSubSumHCFlwsDnyFmSb | The value of tmnxBsxAaSubSumHCFlwsDnyFmSb indicates the total number of flows that dropped subsequent packets in the subscriber to network direction. This object is a 64-bit version of tmnxBsxAaSubSumFlwsDnyFmSb. |
| flowsDenyToSub | UINT128 | tmnxBsxAaSubSumHCFlwsDnyToSb | The value of tmnxBsxAaSubSumHCFlwsDnyToSb indicates the total number of flows that dropped subsequent packets in the network to subscriber direction. This object is the 64-bit version of tmnxBsxAaSubSumFlwsDnyToSb. |
| mdaMdaNum | int | tmnxBsxAaSubSumMdaMdaNum | The value of tmnxBsxAaSubSumMdaMdaNum indicates the MDA number of the ISA-AA MDA servicing the subscriber. |
| mdaSlotNum | int | tmnxBsxAaSubSumMdaSlotNum | The value of tmnxBsxAaSubSumMdaSlotNum indicates the slot number of the ISA-AA MDA servicing the subscriber. |
| octsAdmitFromSub | UINT128 | tmnxBsxAaSubSumHCOctsAdmFmSb | The value of tmnxBsxAaSubSumHCOctsAdmFmSb indicates the total number of bytes permitted for the subscriber to network direction. This object is a 64-bit version of tmnxBsxAaSubSumOctsAdmFmSb. |

**(5 of 28)**

| 5620 SAM counter name | Type | MIB counter name | Description |
|---|---|---|---|
| octsAdmitToSub | UINT128 | tmnxBsxAaSubSumHCOcts AdmToSb | The value of tmnxBsxAaSubSumHCOctsAdmToSb indicates the total number of bytes permitted for the network to subscriber direction. This object is a 64-bit version of tmnxBsxAaSubSumOctsAdmToSb. |
| octsDenyFromSub | UINT128 | tmnxBsxAaSubSumHCOcts DnyFmSb | The value of tmnxBsxAaSubSumHCOctsDnyFmSb indicates the total number of bytes dropped for the subscriber to network direction. This object is a 64-bit version of tmnxBsxAaSubSumOctsDnyFmSb. |
| octsDenyToSub | UINT128 | tmnxBsxAaSubSumHCOcts DnyToSb | The value of tmnxBsxAaSubSumHCOctsDnyToSb indicates the total number of bytes dropped for the network to subscriber direction. This object is a 64-bit version of tmnxBsxAaSubSumOctsDnyToSb. |
| pktsAdmitFromSub | UINT128 | tmnxBsxAaSubSumHCPkts AdmFmSb | The value of tmnxBsxAaSubSumHCPktsAdmFmSb indicates the total number of packets permitted for the subscriber to network direction. This object is a 64-bit version of tmnxBsxAaSubSumPktsAdmFmSb. |
| pktsAdmitToSub | UINT128 | tmnxBsxAaSubSumHCPkts AdmToSb | The value of tmnxBsxAaSubSumHCPktsAdmToSb indicates the total number of packets permitted for the network to subscriber direction. This object is a 64-bit version of tmnxBsxAaSubSumPktsAdmToSb. |
| pktsDenyFromSub | UINT128 | tmnxBsxAaSubSumHCPkts DnyFmSb | The value of tmnxBsxAaSubSumHCPktsDnyFmSb indicates the total number of packets dropped for the subscriber to network direction. This object is a 64-bit version of tmnxBsxAaSubSumPktsDnyFmSb. |
| pktsDenyToSub | UINT128 | tmnxBsxAaSubSumHCPkts DnyToSb | The value of tmnxBsxAaSubSumHCPktsDnyToSb indicates the total number of packets dropped for the network to subscriber direction. This object is a 64-bit version of tmnxBsxAaSubSumPktsDnyToSb. |
| statsInterval | int | tmnxBsxAaSubStatsInterv al | The tmnxBsxAaSubStatsInterval specifies the interval for the retrieval of application assurance subscriber statistics. |
| termFlowDuration | UINT128 | tmnxBsxAaSubSumHCTer mFlwDur | The value of tmnxBsxAaSubSumHCTermFlwDur indicates the sum of all flow durations from first packet seen to last packet seen for flows that have terminated. This object is a 64-bit version of tmnxBsxAaSubSumTermFlwDur. |
| termFlows | UINT128 | tmnxBsxAaSubSumHCTer mFlws | The value of tmnxBsxAaSubSumHCTermFlws indicates the total number of allowed flows that have terminated. This object is a 64-bit version of tmnxBsxAaSubSumTermFlws. |

**(6 of 28)**

| 5620 SAM counter name | Type | MIB counter name | Description |
|---|---|---|---|
| **AaSpokeSdpBindingSumStats**<br>MIB table name: TIMETRA-BSX-NG-MIB.tmnxBsxAaSubSumTable<br>Monitored class: svt.SpokeSdpBinding | | | |
| aaSpokeSdpBinding | String | tmnxBsxAaSubscriber | The Application Assurance Subscriber identifier. The format of this object is determined by the value of the tmnxBsxAaSubscriberType. |
| activeFlowsFromSub | long | tmnxBsxAaSubSumActFlwsFmSb | The value of tmnxBsxAaSubSumActFlwsFmSb indicates the number of allowed flows in the subscriber to network direction that are active. |
| activeFlowsToSub | long | tmnxBsxAaSubSumActFlwsToSb | The value of tmnxBsxAaSubSumActFlwsToSb indicates the number of allowed flows in the network to subscriber direction that are active. |
| durationFlowsLong | UINT128 | tmnxBsxAaSubSumHCLngDurFlws | The value of tmnxBsxAaSubSumHCLngDurFlws indicates the total number of flows with a duration greater than 180 seconds, that have completed. This object is a 64-bit version of tmnxBsxAaSubSumLngDurFlws. |
| durationFlowsMedium | UINT128 | tmnxBsxAaSubSumHCMedDurFlws | The value of tmnxBsxAaSubSumHCMedDurFlws indicates the total number of flows with a duration less than or equal to 180 seconds, but greater than 30 seconds, that have completed. This object is a 64-bit version of tmnxBsxAaSubSumMedDurFlws. |
| durationFlowsShort | UINT128 | tmnxBsxAaSubSumHCShrtDurFlws | The value of tmnxBsxAaSubSumHCShrtDurFlws indicates the total number of flows with a duration less than or equal to 30 seconds, that have completed. This object is a 64-bit version of tmnxBsxAaSubSumShrtDurFlws. |
| flowsAdmitFromSub | UINT128 | tmnxBsxAaSubSumHCFlwsAdmFmSb | The value of tmnxBsxAaSubSumHCFlwsAdmFmSb indicates the total number of flows permitted for the subscriber to network direction. This object is a 64-bit version of tmnxBsxAaSubSumFlwsAdmFmSb. |
| flowsAdmitToSub | UINT128 | tmnxBsxAaSubSumHCFlwsAdmToSb | The value of tmnxBsxAaSubSumHCFlwsAdmToSb indicates the total number of flows permitted for the network to subscriber direction. This object is a 64-bit version of tmnxBsxAaSubSumFlwsAdmToSb. |
| flowsDenyFromSub | UINT128 | tmnxBsxAaSubSumHCFlwsDnyFmSb | The value of tmnxBsxAaSubSumHCFlwsDnyFmSb indicates the total number of flows that dropped subsequent packets in the subscriber to network direction. This object is a 64-bit version of tmnxBsxAaSubSumFlwsDnyFmSb. |

**(7 of 28)**

| 5620 SAM counter name | Type | MIB counter name | Description |
|---|---|---|---|
| flowsDenyToSub | UINT128 | tmnxBsxAaSubSumHCFlwsDnyToSb | The value of tmnxBsxAaSubSumHCFlwsDnyToSb indicates the total number of flows that dropped subsequent packets in the network to subscriber direction. This object is the 64-bit version of tmnxBsxAaSubSumFlwsDnyToSb. |
| mdaMdaNum | int | tmnxBsxAaSubSumMdaMdaNum | The value of tmnxBsxAaSubSumMdaMdaNum indicates the MDA number of the ISA-AA MDA servicing the subscriber. |
| mdaSlotNum | int | tmnxBsxAaSubSumMdaSlotNum | The value of tmnxBsxAaSubSumMdaSlotNum indicates the slot number of the ISA-AA MDA servicing the subscriber. |
| octsAdmitFromSub | UINT128 | tmnxBsxAaSubSumHCOctsAdmFmSb | The value of tmnxBsxAaSubSumHCOctsAdmFmSb indicates the total number of bytes permitted for the subscriber to network direction. This object is a 64-bit version of tmnxBsxAaSubSumOctsAdmFmSb. |
| octsAdmitToSub | UINT128 | tmnxBsxAaSubSumHCOctsAdmToSb | The value of tmnxBsxAaSubSumHCOctsAdmToSb indicates the total number of bytes permitted for the network to subscriber direction. This object is a 64-bit version of tmnxBsxAaSubSumOctsAdmToSb. |
| octsDenyFromSub | UINT128 | tmnxBsxAaSubSumHCOctsDnyFmSb | The value of tmnxBsxAaSubSumHCOctsDnyFmSb indicates the total number of bytes dropped for the subscriber to network direction. This object is a 64-bit version of tmnxBsxAaSubSumOctsDnyFmSb. |
| octsDenyToSub | UINT128 | tmnxBsxAaSubSumHCOctsDnyToSb | The value of tmnxBsxAaSubSumHCOctsDnyToSb indicates the total number of bytes dropped for the network to subscriber direction. This object is a 64-bit version of tmnxBsxAaSubSumOctsDnyToSb. |
| pktsAdmitFromSub | UINT128 | tmnxBsxAaSubSumHCPktsAdmFmSb | The value of tmnxBsxAaSubSumHCPktsAdmFmSb indicates the total number of packets permitted for the subscriber to network direction. This object is a 64-bit version of tmnxBsxAaSubSumPktsAdmFmSb. |
| pktsAdmitToSub | UINT128 | tmnxBsxAaSubSumHCPktsAdmToSb | The value of tmnxBsxAaSubSumHCPktsAdmToSb indicates the total number of packets permitted for the network to subscriber direction. This object is a 64-bit version of tmnxBsxAaSubSumPktsAdmToSb. |
| pktsDenyFromSub | UINT128 | tmnxBsxAaSubSumHCPktsDnyFmSb | The value of tmnxBsxAaSubSumHCPktsDnyFmSb indicates the total number of packets dropped for the subscriber to network direction. This object is a 64-bit version of tmnxBsxAaSubSumPktsDnyFmSb. |

**(8 of 28)**

| 5620 SAM counter name | Type | MIB counter name | Description |
|---|---|---|---|
| pktsDenyToSub | UINT128 | tmnxBsxAaSubSumHCPktsDnyToSb | The value of tmnxBsxAaSubSumHCPktsDnyToSb indicates the total number of packets dropped for the network to subscriber direction. This object is a 64-bit version of tmnxBsxAaSubSumPktsDnyToSb. |
| statsInterval | int | tmnxBsxAaSubStatsInterval | The tmnxBsxAaSubStatsInterval specifies the interval for the retrieval of application assurance subscriber statistics. |
| termFlowDuration | UINT128 | tmnxBsxAaSubSumHCTermFlwDur | The value of tmnxBsxAaSubSumHCTermFlwDur indicates the sum of all flow durations from first packet seen to last packet seen for flows that have terminated. This object is a 64-bit version of tmnxBsxAaSubSumTermFlwDur. |
| termFlows | UINT128 | tmnxBsxAaSubSumHCTermFlws | The value of tmnxBsxAaSubSumHCTermFlws indicates the total number of allowed flows that have terminated. This object is a 64-bit version of tmnxBsxAaSubSumTermFlws. |
| **AaSubSumStats**<br>MIB table name: TIMETRA-BSX-NG-MIB.tmnxBsxAaSubSumTable<br>Monitored class: ressubscr.ResidentialSubscriberInstance | | | |
| activeFlowsFromSub | long | tmnxBsxAaSubSumActFlwsFmSb | The value of tmnxBsxAaSubSumActFlwsFmSb indicates the number of allowed flows in the subscriber to network direction that are active. |
| activeFlowsToSub | long | tmnxBsxAaSubSumActFlwsToSb | The value of tmnxBsxAaSubSumActFlwsToSb indicates the number of allowed flows in the network to subscriber direction that are active. |
| durationFlowsLong | UINT128 | tmnxBsxAaSubSumHCLngDurFlws | The value of tmnxBsxAaSubSumHCLngDurFlws indicates the total number of flows with a duration greater than 180 seconds, that have completed. This object is a 64-bit version of tmnxBsxAaSubSumLngDurFlws. |
| durationFlowsMedium | UINT128 | tmnxBsxAaSubSumHCMedDurFlws | The value of tmnxBsxAaSubSumHCMedDurFlws indicates the total number of flows with a duration less than or equal to 180 seconds, but greater than 30 seconds, that have completed. This object is a 64-bit version of tmnxBsxAaSubSumMedDurFlws. |
| durationFlowsShort | UINT128 | tmnxBsxAaSubSumHCShrtDurFlws | The value of tmnxBsxAaSubSumHCShrtDurFlws indicates the total number of flows with a duration less than or equal to 30 seconds, that have completed. This object is a 64-bit version of tmnxBsxAaSubSumShrtDurFlws. |

**(9 of 28)**

| 5620 SAM counter name | Type | MIB counter name | Description |
|---|---|---|---|
| flowsAdmitFromSub | UINT128 | tmnxBsxAaSubSumHCFlwsAdmFmSb | The value of tmnxBsxAaSubSumHCFlwsAdmFmSb indicates the total number of flows permitted for the subscriber to network direction. This object is a 64-bit version of tmnxBsxAaSubSumFlwsAdmFmSb. |
| flowsAdmitToSub | UINT128 | tmnxBsxAaSubSumHCFlwsAdmToSb | The value of tmnxBsxAaSubSumHCFlwsAdmToSb indicates the total number of flows permitted for the network to subscriber direction. This object is a 64-bit version of tmnxBsxAaSubSumFlwsAdmToSb. |
| flowsDenyFromSub | UINT128 | tmnxBsxAaSubSumHCFlwsDnyFmSb | The value of tmnxBsxAaSubSumHCFlwsDnyFmSb indicates the total number of flows that dropped subsequent packets in the subscriber to network direction. This object is a 64-bit version of tmnxBsxAaSubSumFlwsDnyFmSb. |
| flowsDenyToSub | UINT128 | tmnxBsxAaSubSumHCFlwsDnyToSb | The value of tmnxBsxAaSubSumHCFlwsDnyToSb indicates the total number of flows that dropped subsequent packets in the network to subscriber direction. This object is the 64-bit version of tmnxBsxAaSubSumFlwsDnyToSb. |
| mdaMdaNum | int | tmnxBsxAaSubSumMdaMdaNum | The value of tmnxBsxAaSubSumMdaMdaNum indicates the MDA number of the ISA-AA MDA servicing the subscriber. |
| mdaSlotNum | int | tmnxBsxAaSubSumMdaSlotNum | The value of tmnxBsxAaSubSumMdaSlotNum indicates the slot number of the ISA-AA MDA servicing the subscriber. |
| octsAdmitFromSub | UINT128 | tmnxBsxAaSubSumHCOctsAdmFmSb | The value of tmnxBsxAaSubSumHCOctsAdmFmSb indicates the total number of bytes permitted for the subscriber to network direction. This object is a 64-bit version of tmnxBsxAaSubSumOctsAdmFmSb. |
| octsAdmitToSub | UINT128 | tmnxBsxAaSubSumHCOctsAdmToSb | The value of tmnxBsxAaSubSumHCOctsAdmToSb indicates the total number of bytes permitted for the network to subscriber direction. This object is a 64-bit version of tmnxBsxAaSubSumOctsAdmToSb. |
| octsDenyFromSub | UINT128 | tmnxBsxAaSubSumHCOctsDnyFmSb | The value of tmnxBsxAaSubSumHCOctsDnyFmSb indicates the total number of bytes dropped for the subscriber to network direction. This object is a 64-bit version of tmnxBsxAaSubSumOctsDnyFmSb. |
| octsDenyToSub | UINT128 | tmnxBsxAaSubSumHCOctsDnyToSb | The value of tmnxBsxAaSubSumHCOctsDnyToSb indicates the total number of bytes dropped for the network to subscriber direction. This object is a 64-bit version of tmnxBsxAaSubSumOctsDnyToSb. |

**(10 of 28)**

| 5620 SAM counter name | Type | MIB counter name | Description |
|---|---|---|---|
| pktsAdmitFromSub | UINT128 | tmnxBsxAaSubSumHCPktsAdmFmSb | The value of tmnxBsxAaSubSumHCPktsAdmFmSb indicates the total number of packets permitted for the subscriber to network direction. This object is a 64-bit version of tmnxBsxAaSubSumPktsAdmFmSb. |
| pktsAdmitToSub | UINT128 | tmnxBsxAaSubSumHCPktsAdmToSb | The value of tmnxBsxAaSubSumHCPktsAdmToSb indicates the total number of packets permitted for the network to subscriber direction. This object is a 64-bit version of tmnxBsxAaSubSumPktsAdmToSb. |
| pktsDenyFromSub | UINT128 | tmnxBsxAaSubSumHCPktsDnyFmSb | The value of tmnxBsxAaSubSumHCPktsDnyFmSb indicates the total number of packets dropped for the subscriber to network direction. This object is a 64-bit version of tmnxBsxAaSubSumPktsDnyFmSb. |
| pktsDenyToSub | UINT128 | tmnxBsxAaSubSumHCPktsDnyToSb | The value of tmnxBsxAaSubSumHCPktsDnyToSb indicates the total number of packets dropped for the network to subscriber direction. This object is a 64-bit version of tmnxBsxAaSubSumPktsDnyToSb. |
| statsInterval | int | tmnxBsxAaSubStatsInterval | The tmnxBsxAaSubStatsInterval specifies the interval for the retrieval of application assurance subscriber statistics. |
| termFlowDuration | UINT128 | tmnxBsxAaSubSumHCTermFlwDur | The value of tmnxBsxAaSubSumHCTermFlwDur indicates the sum of all flow durations from first packet seen to last packet seen for flows that have terminated. This object is a 64-bit version of tmnxBsxAaSubSumTermFlwDur. |
| termFlows | UINT128 | tmnxBsxAaSubSumHCTermFlws | The value of tmnxBsxAaSubSumHCTermFlws indicates the total number of allowed flows that have terminated. This object is a 64-bit version of tmnxBsxAaSubSumTermFlws. |
| **BsxMdaStats**<br>MIB table name: TIMETRA-BSX-NG-MIB.tmnxBsxGrpStatusTable<br>Monitored classes:<br>• isa.AaGroup<br>• isa.AaGroupMember | | | |
| flows | long | tmnxBsxGrpStatusFlows | The value of tmnxBsxGrpStatusFlows indicates the number of flows seen by the ISA-AA MDA(s). Note that if the same 5-tuple is seen for a different flow within the flow timeout, it will still be considered one flow. |
| flowsCurrent | long | tmnxBsxGrpStatusFlowsCurrent | The value of tmnxBsxGrpStatusFlowsCurrent indicates the number of flows currently being tracked by the ISA-AA MDA(s). |

**(11 of 28)**

| 5620 SAM counter name | Type | MIB counter name | Description |
|---|---|---|---|
| flowSetupRate | long | tmnxBsxGrpStatusFlowSetupRate | The value of tmnxBsxGrpStatusFlowSetupRate indicates the number of flow setups per second. The calculation is weighted to give half of the weight to flows setup within the last five minutes and 25 weighting to flows setup in the previous five minutes, etc. |
| hCFlows | UINT128 | tmnxBsxGrpStatusHCFlows | The value of tmnxBsxGrpStatusHCFlows indicates the number of flows seen by the ISA-AA MDA(s). Note that if the same 5-tuple is seen for a different flow within the flow timeout, it will still be considered one flow. |
| hCOctsDiscCongIn | UINT128 | tmnxBsxGrpStatusHCOctsDiscCongIn | The value of tmnxBsxGrpStatusHCOctsDiscCongIn indicates the number of bytes discarded by the IOMs prior to the ISA-AA MDA(s) due to egress IOM congestion. |
| hCOctsDiscCongMda | UINT128 | tmnxBsxGrpStatusHCOctsDisCongMda | The value of tmnxBsxGrpStatusHCOctsDisCongMda indicates the number of bytes discarded by the ISA-AA MDA(s) due to congestion. |
| hCOctsDiscCongOut | UINT128 | tmnxBsxGrpStatusHCOctsDisCongOut | The value of tmnxBsxGrpStatusHCOctsDisCongOut indicates the number of bytes discarded by the IOMs after the ISA-AA MDA(s) due to ingress IOM congestion. |
| hCOctsDiscErrors | UINT128 | tmnxBsxGrpStatusHCOctsDiscErrors | The value of tmnxBsxGrpStatusHCOctsDiscErrors indicates the number of bytes discarded due to unrecoverable errors. |
| hCOctsDiscPolicy | UINT128 | tmnxBsxGrpStatusHCOctsDiscPolicy | The value of tmnxBsxGrpStatusHCOctsDiscPolicy indicates the number of bytes discarded by the ISA-AA MDA(s) due to policy policers or discard actions. |
| hCOctsFromMda | UINT128 | tmnxBsxGrpStatusHCOctsFromMda | The value of tmnxBsxGrpStatusHCOctsFromMda indicates the number of bytes sent from the ISA-AA MDA(s) to the local IOM. |
| hCOctsIn | UINT128 | tmnxBsxGrpStatusHCOctsIn | The value of tmnxBsxGrpStatusHCOctsIn indicates the number of bytes diverted from ingress IOMs towards the ISA-AA MDA(s). |
| hCOctsInMda | UINT128 | tmnxBsxGrpStatusHCOctsInMda | The value of tmnxBsxGrpStatusHCOctsInMda indicates the number of bytes buffered by the ISA-AA MDA(s). |
| hCOctsInspected | UINT128 | tmnxBsxGrpStatusHCOctsInspected | The value of tmnxBsxGrpStatusHCOctsInspected indicates the number of bytes sent for protocol determination by the ISA-AA MDA(s). |

**(12 of 28)**

| 5620 SAM counter name | Type | MIB counter name | Description |
|---|---|---|---|
| hCOctsOut | UINT128 | tmnxBsxGrpStatusHCOctsOut | The value of tmnxBsxGrpStatusHCOctsOut indicates the number of bytes sent to egress IOMs from the ISA-AA MDA(s). |
| hCOctsPolicyByPass | UINT128 | tmnxBsxGrpStatusHCOctsPolicyByps | The value of tmnxBsxGrpStatusHCOctsPolicyByps indicates the number of bytes passed untouched that did not have statistics or policy applied. |
| hCOctsToMda | UINT128 | tmnxBsxGrpStatusHCOctsToMda | The value of tmnxBsxGrpStatusHCOctsToMda indicates the number of bytes sent from an IOM towards the ISA-AA MDA(s). |
| hCPktsDiscCongIn | UINT128 | tmnxBsxGrpStatusHCPktsDiscCongIn | The value of tmnxBsxGrpStatusHCPktsDiscCongIn indicates the number of packets discarded by the IOMs prior to the ISA-AA MDA(s) due to egress IOM congestion. |
| hCPktsDiscCongMda | UINT128 | tmnxBsxGrpStatusHCPktsDisCongMda | The value of tmnxBsxGrpStatusHCPktsDisCongMda indicates the number of packets discarded by the ISA-AA MDA(s) due to congestion. |
| hCPktsDiscCongOut | UINT128 | tmnxBsxGrpStatusHCPktsDisCongOut | The value of tmnxBsxGrpStatusHCPktsDisCongOut indicates the number of packets discarded by the IOMs after the ISA-AA MDA(s) due to ingress IOM congestion. |
| hCPktsDiscErrors | UINT128 | tmnxBsxGrpStatusHCPktsDiscErrors | The value of tmnxBsxGrpStatusHCPktsDiscErrors indicates the number of packets discarded due to unrecoverable errors. |
| hCPktsDiscPolicy | UINT128 | tmnxBsxGrpStatusHCPktsDiscPolicy | The value of tmnxBsxGrpStatusHCPktsDiscPolicy indicates the number of packets discarded by the ISA-AA MDA(s) due to policy policers or discard actions. |
| hCPktsFromMda | UINT128 | tmnxBsxGrpStatusHCPktsFromMda | The value of tmnxBsxGrpStatusHCPktsFromMda indicates the number of packets sent from the ISA-AA MDA(s) to the local IOM. |
| hCPktsIn | UINT128 | tmnxBsxGrpStatusHCPktsIn | The value of tmnxBsxGrpStatusHCPktsIn indicates the number of packets diverted from ingress IOMs towards the ISA-AA MDA(s). |
| hCPktsInMda | UINT128 | tmnxBsxGrpStatusHCPktsInMda | The value of tmnxBsxGrpStatusHCPktsInMda indicates the number of packets buffered by the ISA-AA MDA(s). |
| hCPktsInPchipErrors | UINT128 | tmnxBsxGrpStatusHCPktsInPChipErs | The value of tmnxBsxGrpStatusHCPktsInPChipErs indicates the number of packets discarded by the egress P-chip due to errors in the packets. |

**(13 of 28)**

| 5620 SAM counter name | Type | MIB counter name | Description |
|---|---|---|---|
| hCPktsInspected | UINT128 | tmnxBsxGrpStatusHCPktsInspected | The value of tmnxBsxGrpStatusHCPktsInspected indicates the number of packets sent for protocol determination by the ISA-AA MDA(s). |
| hCPktsOut | UINT128 | tmnxBsxGrpStatusHCPktsOut | The value of tmnxBsxGrpStatusHCPktsOut indicates the number of packets sent to egress IOMs from the ISA-AA MDA(s). |
| hCPktsOutPchipErrors | UINT128 | tmnxBsxGrpStatusHCPktsOutPChipEr | The value of tmnxBsxGrpStatusHCPktsOutPChipEr indicates the number of packets discarded by the ingress P-chip due to errors in the packets. |
| hCPktsPolicyByPass | UINT128 | tmnxBsxGrpStatusHCPktsPolicyByps | The value of tmnxBsxGrpStatusHCPktsPolicyByps indicates the number of packets passed untouched that did not have statistics or policy applied. |
| hCPktsToMda | UINT128 | tmnxBsxGrpStatusHCPktsToMda | The value of tmnxBsxGrpStatusHCPktsToMda indicates the number of packets sent from an IOM towards the ISA-AA MDA(s). |
| octsDiscCongIn | long | tmnxBsxGrpStatusOctsDiscCongIn | The value of tmnxBsxGrpStatusOctsDiscCongIn indicates the number of bytes discarded by the IOMs prior to the ISA-AA MDA(s) due to egress IOM congestion. |
| octsDiscCongMda | long | tmnxBsxGrpStatusOctsDisCongMda | The value of tmnxBsxGrpStatusOctsDisCongMda indicates the number of bytes discarded by the ISA-AA MDA(s) due to congestion. |
| octsDiscCongOut | long | tmnxBsxGrpStatusOctsDisCongOut | The value of tmnxBsxGrpStatusOctsDisCongOut indicates the number of bytes discarded by the IOMs after the ISA-AA MDA(s) due to ingress IOM congestion. |
| octsDiscErrors | long | tmnxBsxGrpStatusOctsDiscErrors | The value of tmnxBsxGrpStatusOctsDiscErrors indicates the number of bytes discarded due to unrecoverable errors. |
| octsDiscPolicy | long | tmnxBsxGrpStatusOctsDiscPolicy | The value of tmnxBsxGrpStatusOctsDiscPolicy indicates the number of bytes discarded by the ISA-AA MDA(s) due to policy. |
| octsFromMda | long | tmnxBsxGrpStatusOctsFromMda | The value of tmnxBsxGrpStatusOctsFromMda indicates the number of bytes sent from the ISA-AA MDA(s) to the local IOM. |
| octsIn | long | tmnxBsxGrpStatusOctsIn | The value of tmnxBsxGrpStatusOctsIn indicates the number of bytes diverted from ingress IOMs towards the ISA-AA MDA(s). |
| octsInMda | long | tmnxBsxGrpStatusOctsInMda | The value of tmnxBsxGrpStatusOctsInMda indicates the number of bytes buffered by the ISA-AA MDA(s). |

**(14 of 28)**

| 5620 SAM counter name | Type | MIB counter name | Description |
|---|---|---|---|
| octsInspected | long | tmnxBsxGrpStatusOctsInspected | The value of tmnxBsxGrpStatusOctsInspected indicates the number of bytes sent for protocol determination by the ISA-AA MDA(s). |
| octsOut | long | tmnxBsxGrpStatusOctsOut | The value of tmnxBsxGrpStatusOctsOut indicates the number of bytes sent to egress IOMs from the ISA-AA MDA(s). |
| octsPolicyByPass | long | tmnxBsxGrpStatusOctsPolicyByps | The value of tmnxBsxGrpStatusOctsPolicyByps indicates the number of bytes passed untouched that did not have statistics or policy applied. |
| octsToMda | long | tmnxBsxGrpStatusOctsToMda | The value of tmnxBsxGrpStatusOctsToMda indicates the number of bytes sent from an IOM towards the ISA-AA MDA(s). |
| pktsDiscCongIn | long | tmnxBsxGrpStatusPktsDiscCongIn | The value of tmnxBsxGrpStatusPktsDiscCongIn indicates the number of packets discarded by the IOMs prior to the ISA-AA MDA(s) due to egress IOM congestion. |
| pktsDiscCongMda | long | tmnxBsxGrpStatusPktsDisCongMda | The value of tmnxBsxGrpStatusPktsDisCongMda indicates the number of packets discarded by the ISA-AA MDA(s) due to congestion. |
| pktsDiscCongOut | long | tmnxBsxGrpStatusPktsDisCongOut | The value of tmnxBsxGrpStatusPktsDisCongOut indicates the number of packets discarded by the IOMs after the ISA-AA MDA(s) due to ingress IOM congestion. |
| pktsDiscErrors | long | tmnxBsxGrpStatusPktsDiscErrors | The value of tmnxBsxGrpStatusPktsDiscErrors indicates the number of packets discarded due to unrecoverable errors. |
| pktsDiscPolicy | long | tmnxBsxGrpStatusPktsDiscPolicy | The value of tmnxBsxGrpStatusPktsDiscPolicy indicates the number of packets discarded by the ISA-AA MDA(s) due to policy. |
| pktsFromMda | long | tmnxBsxGrpStatusPktsFromMda | The value of tmnxBsxGrpStatusPktsFromMda indicates the number of packets sent from the ISA-AA MDA(s) to the local IOM. |
| pktsIn | long | tmnxBsxGrpStatusPktsIn | The value of tmnxBsxGrpStatusPktsIn indicates the number of packets diverted from ingress IOMs towards the ISA-AA MDA(s). |
| pktsInMda | long | tmnxBsxGrpStatusPktsInMda | The value of tmnxBsxGrpStatusPktsInMda indicates the number of packets buffered by the ISA-AA MDA(s). |
| pktsInPChipErrors | long | tmnxBsxGrpStatusPktsInPChipErs | The value of tmnxBsxGrpStatusPktsInPChipErs indicates the number of packets discarded by the egress P-chip due to errors in the packets. |

**(15 of 28)**

| 5620 SAM counter name | Type | MIB counter name | Description |
|---|---|---|---|
| pktsInspected | long | tmnxBsxGrpStatusPktsInspected | The value of tmnxBsxGrpStatusPktsInspected indicates the number of packets sent for protocol determination by the ISA-AA MDA(s). |
| pktsOut | long | tmnxBsxGrpStatusPktsOut | The value of tmnxBsxGrpStatusPktsOut indicates the number of packets sent to egress IOMs from the ISA-AA MDA(s). |
| pktsOutPChipErrors | long | tmnxBsxGrpStatusPktsOutPChipEr | The value of tmnxBsxGrpStatusPktsOutPChipEr indicates the number of packets discarded by the ingress P-chip due to errors in the packets. |
| pktsPolicyByPass | long | tmnxBsxGrpStatusPktsPolicyByps | The value of tmnxBsxGrpStatusPktsPolicyByps indicates the number of packets passed untouched that did not have statistics or policy applied. |
| pktsToMda | long | tmnxBsxGrpStatusPktsToMda | The value of tmnxBsxGrpStatusPktsToMda indicates the number of packets sent from an IOM towards the ISA-AA MDA(s). |
| subsCurrent | long | tmnxBsxGrpStatusSubsCurrent | The value of tmnxBsxGrpStatusSubsCurrent indicates the number of subscribers currently with flow records in the ISA-AA MDA(s). |
| subsDiverted | long | tmnxBsxGrpStatusSubsDiverted | The value of tmnxBsxGrpStatusSubsDiverted indicates the number of subscribers defined in TIMETRA-SUBSCRIBER-MGMT-MIB::tmnxSubInfoAppProfile in the tmnxSubscriberInfoTable with tmnxBsxAppProfDivert set to 'true'. |
| trafficRate | long | tmnxBsxGrpStatusTrafficRate | The value of tmnxBsxGrpStatusTrafficRate indicates the traffic rate in kilo-bits per second (kbps) incoming to the ISA-AA MDA(s). |
| **LnsGroupMemberStats**<br>MIB table name: TIMETRA-L2TP-MIB.tmnxL2tpIsaMdaStatTable<br>Monitored class: isa.LnsGroupMember | | | |
| operState | int | tmnxL2tpIsaMdaStatOperState | The value of tmnxL2tpIsaMdaStatOperState indicates the operational state of this L2TP ISA MDA. |
| sessions | long | tmnxL2tpIsaMdaStatSessions | The value of tmnxL2tpIsaMdaStatOperState indicates the actual number of PPP sessions on this L2TP ISA MDA. |
| **MgCardFlowStats**<br>MIB table name: TIMETRA-MOBILE-SERVING-MIB.tmnxMobServProcsTable<br>Monitored classes:<br>• equipment.BaseCard<br>• lte.ServingGateway | | | |
| epcId | long | tmnxMobGwId | The value of tmnxMobGwId uniquely identifies a mobile gateway configured in the system. |

**(16 of 28)**

| 5620 SAM counter name | Type | MIB counter name | Description |
|---|---|---|---|
| servProcAttach | long | tmnxMobServProcAttach | The value of tmnxMobServProcAttach indicates the number of attach procedures sent by the User Equipments (UEs) and executed succesfully on this card. |
| servProcAttachFailures | long | tmnxMobServProcAttachFailures | The value of tmnxMobServProcAttachFailures indicates the number of attach procedure failures. |
| servProcAttachPiggyBack | long | tmnxMobServProcAttachPiggyBack | The value of tmnxMobServProcAttachPiggyBack indicates the number of attach procedures sent by the User Equipments (UEs) and executed succesfully on this card with piggybacking. |
| servProcAttachPiggyFail | long | tmnxMobServProcAttachPiggyFail | The value of tmnxMobServProcAttachPiggyFail indicates the number of attach procedure failures with piggybacking. |
| servProcDetach | long | tmnxMobServProcDetach | The value of tmnxMobServProcDetach indicates the number of detach procedures executed succesfully on this card. |
| servProcDetachFailures | long | tmnxMobServProcDetachFailures | The value of tmnxMobServProcDetachFailures indicates the number of detach procedure failures. |
| servProcEhrpdLteHo | long | tmnxMobServProcEhrpdLteHo | The value of tmnxMobServProcEhrpdLteHo indicates the number of evolved High Rate Packet Data (eHRPD) to Long Term Evolution (LTE) handovers served successfully by this card. |
| servProcEhrpdLteHoFails | long | tmnxMobServProcEhrpdLteHoFails | The value of tmnxMobServProcEhrpdLteHoFails indicates the number of evolved High Rate Packet Data (eHRPD) to Long Term Evolution (LTE) handover failures served by this card. |
| servProcHssQosModificatn | long | tmnxMobServProcHssQosModificatn | The value of tmnxMobServProcHssQosModificatn indicates the number of successful HSS initiated QoS modification procedures served by this card. |
| servProcHssQosModifyFails | long | tmnxMobServProcHssQosModifyFails | The value of tmnxMobServProcHssQosModifyFails indicates the number of QoS modification procedure failures. |
| servProcInterMmeIdleTau | long | tmnxMobServProcInterMmeIdleTau | The value of tmnxMobServProcInterMmeIdleTau indicates the number of incoming intra Serving Gateway (SGW) inter Mobility Management Entitiy (MME) Idle mode Tracking Area Updates (TAU) served successfully by this card. |

**(17 of 28)**

| 5620 SAM counter name | Type | MIB counter name | Description |
|---|---|---|---|
| servProcInterMmeIdlTauFls | long | tmnxMobServProcInterMmeIdlTauFls | The value of tmnxMobServProcInterMmeIdlTauFls indicates the number of incoming intra Serving Gateway (SGW) inter Mobility Management Entitiy (MME) Idle mode Tracking Area Updates (TAU) served unsuccessfully by this card. |
| servProcInterMmeRelocs | long | tmnxMobServProcInterMmeRelocs | The value of tmnxMobServProcInterMmeRelocs indicates the number of incoming intra Serving Gateway (SGW) inter Mobility Management Entitiy (MME) detected by this card. |
| servProcInterMmeS1RlTnFls | long | tmnxMobServProcInterMmeS1RlTnFls | The value of tmnxMobServProcInterMmeS1RlTnFls indicates the number of intra Serving Gateway (SGW) inter Mobility Management Entitiy (MME) S1-based relocation failures with indirect tunnels served by this card. |
| servProcInterMmeS1RlTnSuc | long | tmnxMobServProcInterMmeS1RlTnSuc | The value of tmnxMobServProcInterMmeS1RlTnSuc indicates the number of intra Serving Gateway (SGW) inter Mobility Management Entitiy (MME) S1-based relocation with indirect tunnels served successfully by this card. |
| servProcInterMmeS1X2RlFls | long | tmnxMobServProcInterMmeS1X2RlFls | The value of tmnxMobServProcInterMmeS1X2RlFls indicates the number of intra Serving Gateway (SGW) inter Mobility Management Entitiy (MME) X2-based and S1-based relocation failures served by this card. |
| servProcInterMmeS1X2RlSuc | long | tmnxMobServProcInterMmeS1X2RlSuc | The value of tmnxMobServProcInterMmeS1X2RlSuc indicates the number of intra Serving Gateway (SGW) inter Mobility Management Entitiy (MME) X2-based and S1-based relocation served successfully by this card. |
| servProcInterSgwHoOut | long | tmnxMobServProcInterSgwHoOut | The value of tmnxMobServProcInterSgwHoOut indicates the number of outgoing inter Serving Gateway (SGW) handovers served successfully by this card. |
| servProcIntraIdleTauFails | long | tmnxMobServProcIntraIdleTauFails | The value of tmnxMobServProcIntraIdleTauFails indicates the number of intra Serving Gateway (SGW) idle mode Tracking Area Updates (TAU) failures served by this card. |
| servProcIntraS1IndTnlFail | long | tmnxMobServProcIntraS1IndTnlFail | The value of tmnxMobServProcIntraS1IndTnlFail indicates the number of incoming intra Serving Gateway (SGW) S1-based handover failures with indirect tunnels served by this card. |

**(18 of 28)**

| 5620 SAM counter name | Type | MIB counter name | Description |
|---|---|---|---|
| servProcIntraSgwHndvr | long | tmnxMobServProcIntraSgwHndvr | The value of tmnxMobServProcIntraSgwHndvr indicates the number of incoming intra Serving Gateway (SGW) X2-based and S1-based handovers with and without indirect tunnels served successfully by this card. |
| servProcIntraSgwHndvrFail | long | tmnxMobServProcIntraSgwHndvrFail | The value of tmnxMobServProcIntraSgwHndvrFail indicates the number of incoming intra Serving Gateway (SGW) X2-based and S1-based handover failures with and without indirect tunnels served by this card. |
| servProcIntraSgwS1IndTnl | long | tmnxMobServProcIntraSgwS1IndTnl | The value of tmnxMobServProcIntraSgwS1IndTnl indicates the number of incoming intra Serving Gateway (SGW) S1-based handovers with indirect tunnels served successfully by this card. |
| servProcMmeDedBrDeAcFails | long | tmnxMobServProcMmeDedBrDeAcFails | The value of tmnxMobServProcMmeDedBrDeAcFails indicates the number of Mobility Management Entitiy (MME) initiated dedicated bearer de-activation procedure failures. |
| servProcMmeDedBrDeActiv | long | tmnxMobServProcMmeDedBrDeActiv | The value of tmnxMobServProcMmeDedBrDeActiv indicates the number of successful Mobility Management Entitiy (MME) initiated dedicated bearer de-activation procedures served by this card. |
| servProcNwBrModify | long | tmnxMobServProcNwBrModify | The value of tmnxMobServProcNwBrModify indicates the number of network initiated bearer modification procedures served by this card. |
| servProcNwBrModifyFail | long | tmnxMobServProcNwBrModifyFail | The value of tmnxMobServProcNwBrModifyFail indicates the number of network initiated bearer modification procedure failures in this card. |
| servProcNwDedBrActivtn | long | tmnxMobServProcNwDedBrActivtn | The value of tmnxMobServProcNwDedBrActivtn indicates the number of successful network initiated dedicated bearer activation procedures served by this card. |
| servProcNwDedBrActvFails | long | tmnxMobServProcNwDedBrActvFails | The value of tmnxMobServProcNwDedBrActvFails indicates the number of Policy and Charging Rules Function (PCRF) initiated dedicated bearer activation procedure failures. |

**(19 of 28)**

| 5620 SAM counter name | Type | MIB counter name | Description |
|---|---|---|---|
| servProcNwDedBrDeActFails | long | tmnxMobServProcNwDedBrDeActFails | The value of tmnxMobServProcNwDedBrDeActFails indicates the number of Policy and Charging Rules Function (PCRF) initiated dedicated bearer de-activation procedure failures. |
| servProcNwDedBrDeActiv | long | tmnxMobServProcNwDedBrDeActiv | The value of tmnxMobServProcNwDedBrDeActiv indicates the number of successful network initiated dedicated bearer de-activation procedures served by this card. |
| servProcNwPdnSesDeActFail | long | tmnxMobServProcNwPdnSesDeActFail | The value of tmnxMobServProcNwPdnSesDeActFail indicates the number of network initiated Packet Data Network (PDN) session de-activation procedure failures serverd by this card. |
| servProcNwPdnSessDeActiv | long | tmnxMobServProcNwPdnSessDeActiv | The value of tmnxMobServProcNwPdnSessDeActiv indicates the number of network initiated Packet Data Network (PDN) session de-activation procedures served by this card. |
| servProcPagingAttempts | long | tmnxMobServProcPagingAttempts | The value of tmnxMobServProcPagingAttempts indicates the number of paging attempts served by this card. |
| servProcPagingFails | long | tmnxMobServProcPagingFails | The value of tmnxMobServProcPagingFails indicates the number of paging failures served by this card. |
| servProcS1Release | long | tmnxMobServProcS1Release | The value of tmnxMobServProcS1Release indicates the number of successful Evolved NodeB (eNodeB) amd Mobility Management Entitiy (MME) initiated S1 release procedures served by this card. |
| servProcS1ReleaseFailures | long | tmnxMobServProcS1ReleaseFailures | The value of tmnxMobServProcS1ReleaseFailures indicates the number of Evolved NodeB (eNodeB) amd Mobility Management Entitiy (MME) initiated S1 release procedure failures. |
| servProcUeDedBrActivation | long | tmnxMobServProcUeDedBrActivation | The value of tmnxMobServProcUeDedBrActivation indicates the number of successful User Equipment (UE) initiated dedicated bearer activation procedures served by this card. |
| servProcUeDedBrActvFails | long | tmnxMobServProcUeDedBrActvFails | The value of tmnxMobServProcUeDedBrActvFails indicates the number of User Equipment (UE) initiated dedicated bearer activation procedure failures. |

**(20 of 28)**

| 5620 SAM counter name | Type | MIB counter name | Description |
|---|---|---|---|
| servProcUeDedBrDeActv | long | tmnxMobServProcUeDedBrDeActv | The value of tmnxMobServProcUeDedBrDeActv indicates the number of User-Equipment (UE) initiated dedicated bearer deactivation procedures served by this card. |
| servProcUeDedBrDeActvFail | long | tmnxMobServProcUeDedBrDeActvFail | The value of tmnxMobServProcUeDedBrDeActvFail indicates the number of User-Equipment (UE) initiated dedicated bearer deactivation procedure failures in this card. |
| servProcUeDedBrModify | long | tmnxMobServProcUeDedBrModify | The value of tmnxMobServProcUeDedBrModify indicates the number of User-Equipment (UE) initiated dedicated bearer modification procedures served by this card. |
| servProcUeDedBrModifyFail | long | tmnxMobServProcUeDedBrModifyFail | The value of tmnxMobServProcUeDedBrModifyFail indicates the number of User-Equipment (UE) initiated dedicated bearer modification procedure failures in this card. |
| servProcUeServiceReq | long | tmnxMobServProcUeServiceReq | The value of tmnxMobServProcUeServiceReq indicates the number of successful User Equipment (UE) initiated service request procedures served by this card. |
| servProcUeServiceReqFails | long | tmnxMobServProcUeServiceReqFails | The value of tmnxMobServProcUeServiceReqFails indicates the number of User Equipment (UE) initiated service request procedure failures. |
| **MgCardStats**<br>MIB table name: TIMETRA-MOBILE-SERVING-MIB.tmnxMobServStatTable<br>Monitored classes:<br>• equipment.BaseCard<br>• lte.ServingGateway | | | |
| epcId | long | tmnxMobGwId | The value of tmnxMobGwId uniquely identifies a mobile gateway configured in the system. |
| servStatActiveBearers | long | tmnxMobServStatActiveBearers | The value of tmnxMobServStatActiveBearers indicates the number of active bearers being served by this card. |
| servStatApn | long | tmnxMobServStatApn | The value of tmnxMobServStatApn indicates the number of Access Point Names (APNs) being served by this card. |
| servStatBearers | long | tmnxMobServStatBearers | The value of tmnxMobServStatBearers indicates the number of bearers being served by this card. |

**(21 of 28)**

| 5620 SAM counter name | Type | MIB counter name | Description |
|---|---|---|---|
| servStatBuffersAllocated | long | tmnxMobServStatBuffers Allocated | The value of tmnxMobServStatBuffersAllocated indicates the number of allocated paging buffers on this card. |
| servStatBuffersAllocErr | long | tmnxMobServStatBuffers AllocErr | The value of tmnxMobServStatBuffersAllocErr indicates the number of paging buffers not available errors on this card. |
| servStatBuffersAvailable | long | tmnxMobServStatBuffers Available | The value of tmnxMobServStatBuffersAvailable indicates the number of available paging buffers on this card. |
| servStatDedicatedBearers | long | tmnxMobServStatDedicat edBearers | The value of tmnxMobServStatDedicatedBearers indicates the number of dedicated bearers being served by this card. |
| servStatDefaultBearers | long | tmnxMobServStatDefault Bearers | The value of tmnxMobServStatDefaultBearers indicates the number of default bearers being served by this card. |
| servStatHomers | long | tmnxMobServStatHomers | The value of tmnxMobServStatHomers indicates the number of homers being served by this card. |
| servStatIdleBearers | long | tmnxMobServStatIdleBear ers | The value of tmnxMobServStatIpv4v6Bearers indicates the number of idle bearers being served by this card. |
| servStatIdleUes | long | tmnxMobServStatIdleUes | The value of tmnxMobServStatIdleUes indicates the number of idle User Equipments (UE) being served by this card. |
| servStatIpv4Bearers | long | tmnxMobServStatIpv4Bea rers | The value of tmnxMobServStatIpv4Bearers indicates the number of IPv4 bearers being served by this card. |
| servStatIpv4v6Bearers | long | tmnxMobServStatIpv4v6B earers | The value of tmnxMobServStatIpv4v6Bearers indicates the number of IPv4v6 bearers being served by this card. |
| servStatIpv6Bearers | long | tmnxMobServStatIpv6Bea rers | The value of tmnxMobServStatIpv6Bearers indicates the number of IPv6 bearers being served by this card. |
| servStatPagingInProgress | long | tmnxMobServStatPagingIn Progress | The value of tmnxMobServStatPagingInProgress indicates the number of paging processes in progress on this card. |
| servStatRfAcctIntBuf | long | tmnxMobServStatRfAcctIn tBuf | The value of tmnxMobServStatRfAcctIntBuf indicates the number of Accounting Request (ACR) Interim messages buffered by this card. |
| servStatRfAcctStartBuf | long | tmnxMobServStatRfAcctS tartBuf | The value of tmnxMobServStatRfAcctStartBuf indicates the number of Accounting Request (ACR) Start messages buffered by this card. |

**(22 of 28)**

| 5620 SAM counter name | Type | MIB counter name | Description |
|---|---|---|---|
| servStatRfAcctStopBuf | long | tmnxMobServStatRfAcctStopBuf | The value of tmnxMobServStatRfAcctStopBuf indicates the number of Accounting Request (ACR) Stop messages buffered by this card. |
| servStatRfPeer | long | tmnxMobServStatRfPeer | The value of tmnxMobServStatRfPeer indicates the number of peers on the Rf reference point being served by this card. |
| servStatRoamers | long | tmnxMobServStatRoamers | The value of tmnxMobServStatRoamers indicates the number of roamers being served by this card. |
| servStatVisitors | long | tmnxMobServStatVisitors | The value of tmnxMobServStatVisitors indicates the number of visitors being served by this card. |
| slotId | long | tmnxMobServCardSlotNum | The value of tmnxMobServCardSlotNum indicates the slot number of this card. |
| **PdnGwCardFlowStats**<br>MIB table name: TIMETRA-MOBILE-PDN-MIB.tmnxMobPdnProcTable<br>Monitored classes:<br>• equipment.BaseCard<br>• lte.PDNGateway | | | |
| attach | long | tmnxMobPdnProcAttach | The value of tmnxMobPdnProcAttach indicates the number of successful default attach-procedures executed on this card. |
| attachFail | long | tmnxMobPdnProcAttachFail | The value of tmnxMobPdnProcAttachFail indicates the number of failed default attach-procedures executed on this card. |
| attachPiggyBack | long | tmnxMobPdnProcAttachPiggyBack | The value of tmnxMobPdnProcAttachPiggyBack indicates the number of successful default attach-procedures executed on this card with piggybacking. |
| detach | long | tmnxMobPdnProcDetach | The value of tmnxMobPdnProcDetach indicates the number of detach-procedures executed succesfully on this card. |
| epcId | long | tmnxMobGwId | The value of tmnxMobGwId uniquely identifies a mobile gateway configured in the system. |
| nwDedBrActv | long | tmnxMobPdnProcNwDedBrActv | The value of tmnxMobPdnProcNwDedBrActv indicates the number of network initiated dedicated bearer activation procedures served by this card. |
| nwDedBrDeActv | long | tmnxMobPdnProcNwDedBrDeActv | The value of tmnxMobPdnProcNwDedBrDeActv indicates the number of network initiated dedicated bearer activation procedures served by this card. |
| nwDedBrModify | long | tmnxMobPdnProcNwDedBrModify | The value of tmnxMobPdnProcNwDedBrModify indicates the number of network initiated dedicated bearer activation procedures served by this card. |

**(23 of 28)**

| 5620 SAM counter name | Type | MIB counter name | Description |
|---|---|---|---|
| pgwPdnSessDel | long | tmnxMobPdnProcPgwPdnSessDel | The value of tmnxMobPdnProcPgwPdnSessDel indicates the number of successful PDN session-deletion initiated by PDN Gateway (PGW). |
| sessDelFail | long | tmnxMobPdnProcPgwPdnSessDelFail | The value of tmnxMobPdnProcPgwPdnSessDelFail indicates the number of failed PDN session-deletion initiated by PDN Gateway (PGW). |
| slotId | long | tmnxMobPdnCardSlotNum | The value of tmnxMobPdnCardSlotNum indicates the slot number of this card. |
| **PdnGwCardStats**<br>MIB table name: TIMETRA-MOBILE-PDN-MIB.tmnxMobPdnStatTable<br>Monitored classes:<br>• equipment.BaseCard<br>• lte.PDNGateway | | | |
| bearers | long | tmnxMobPdnStatBearers | The value of tmnxMobPdnStatBearers indicates the number of bearers being served by this card. |
| dedicatedBearers | long | tmnxMobPdnStatDedicatedBearers | The value of tmnxMobPdnStatDedicatedBearers indicates the number of dedicated bearers being served by this card. |
| defaultBearers | long | tmnxMobPdnStatDefaultBearers | The value of tmnxMobPdnStatDefaultBearers indicates the number of default bearers being served by this card. |
| epcId | long | tmnxMobGwId | The value of tmnxMobGwId uniquely identifies a mobile gateway configured in the system. |
| ipLocalPools | long | tmnxMobPdnStatIpLocalPools | The value of tmnxMobPdnStatIpLocalPools indicates the number of IP local pools being served by this card. |
| ipv4Bearers | long | tmnxMobPdnStatIpv4Bearers | The value of tmnxMobPdnStatIpv4Bearers indicates the number of IPv4 bearers being served by this card. |
| ipv4PdnSessions | long | tmnxMobPdnStatIpv4PdnSessions | The value of tmnxMobPdnStatIpv4PdnSessions indicates the number of IPv4 PDN Sessions being served by this card. |
| ipv4Sdf | long | tmnxMobPdnStatIpv4Sdf | The value of tmnxMobPdnStatIpv4Sdf indicates the number of IPv4 Service Data Flows (SDFs) on this card. |
| ipv4v6Bearers | long | tmnxMobPdnStatIpv4v6Bearers | The value of tmnxMobPdnStatIpv4v6Bearers indicates the number of IPv4v6 bearers being served by this card. |
| ipv4v6PdnSessions | long | tmnxMobPdnStatIpv4v6PdnSessions | The value of tmnxMobPdnStatIpv4v6PdnSessions indicates the number of IPv4v6 PDN Sessions being served by this card. |

**(24 of 28)**

| 5620 SAM counter name | Type | MIB counter name | Description |
|---|---|---|---|
| ipv6Bearers | long | tmnxMobPdnStatIpv6Bearers | The value of tmnxMobPdnStatIpv6Bearers indicates the number of IPv6 bearers being served by this card. |
| ipv6PdnSessions | long | tmnxMobPdnStatIpv6PdnSessions | The value of tmnxMobPdnStatIpv6PdnSessions indicates the number of IPv6 PDN Sessions being served by this card. |
| ipv6Sdf | long | tmnxMobPdnStatIpv6Sdf | The value of tmnxMobPdnStatIpv6Sdf indicates the number of IPv6 Service Data Flows (SDFs) on this card. |
| realApn | long | tmnxMobPdnStatRealApn | The value of tmnxMobPdnStatRealApn indicates the number of real Access Point Names (APNs) being served by this card. |
| roamers | long | tmnxMobPdnStatRoamers | The value of tmnxMobPdnStatRoamers indicates the number of roamers being served by this card. |
| slotId | long | tmnxMobPdnCardSlotNum | The value of tmnxMobPdnCardSlotNum indicates the slot number of this card. |
| vPRNs | long | tmnxMobPdnStatVPRNs | The value of tmnxMobPdnStatVPRNs indicates the number of VPRNs being served by this card. |
| **VideoGroupMemberStats**<br>MIB table name: TIMETRA-VIDEO-MIB.tmnxVdoGrpMDATable<br>Monitored class: isa.VideoGroupMember | | | |
| vdoGrpMdaActiveRtcpSessions | long | tmnxVdoGrpMdaActiveRtcpSessions | The value of tmnxVdoGrpMdaActiveRtcpSessions indicates the number of active Real Time Transport Control Protocol (RTCP) sessions on this MDA. |
| vdoGrpMdaAdStreamAborts | long | tmnxVdoGrpMdaAdStreamAborts | The value of tmnxVdoGrpMdaAdStreamAborts indicates the number of ad stream aborts on this MDA. An ad stream abort could happen when an egress reset happens. |
| vdoGrpMdaAdStreamResets | long | tmnxVdoGrpMdaAdStreamResets | The value of tmnxVdoGrpMdaAdStreamResets indicates the number of ad stream resets on this MDA. An ad stream reset occurs when the ingress ad stream stops. |
| vdoGrpMdaAvailableMemory | long | tmnxVdoGrpMdaAvailableMemory | The value of tmnxVdoGrpMdaAvailableMemory indicates the amount of cache available on the MDA for storing the video stream. |
| vdoGrpMdaBwInUse | long | tmnxVdoGrpMdaBwInUse | The value of tmnxVdoGrpMdaBwInUse indicates the total aggregate bandwidth of the currently running egress streams. |
| vdoGrpMdaChannelAllocFails | long | tmnxVdoGrpMdaChannelAllocFails | The value of tmnxVdoGrpMdaChannelAllocFails indicates the number of failed channel allocations on this MDA. |
| vdoGrpMdaChannels | long | tmnxVdoGrpMdaChannels | The value of tmnxVdoGrpMdaChannels indicates the number of channels being served on this MDA. |

**(25 of 28)**

| 5620 SAM counter name | Type | MIB counter name | Description |
|---|---|---|---|
| vdoGrpMdaEgressStreamResets | long | tmnxVdoGrpMdaEgressStreamResets | The value of tmnxVdoGrpMdaEgressStreamResets indicates the number of egress stream resets on this MDA. An egress stream reset occurs when there are no packets to transmit on the MDA. |
| vdoGrpMdaHighPktPoolLimitHit | long | tmnxVdoGrpMdaHighPktPoolLimitHit | The value of tmnxVdoGrpMdaHighPktPoolLimitHit indicates the number of times the high packet pool limit has been hit. A high value of this object indicates potential failure in ingress packet storage. |
| vdoGrpMdaIngressStreamResets | long | tmnxVdoGrpMdaIngressStreamResets | The value of tmnxVdoGrpMdaIngressStreamResets indicates the number of ingress stream resets on this MDA. An ingress stream reset occurs when the ingress stream stopped coming in for more than one second. |
| vdoGrpMdaMaxBwExceeded | long | tmnxVdoGrpMdaMaxBwExceeded | The value of tmnxVdoGrpMdaMaxBwExceeded indicates the number of times maximum allowed bandwidth has been exceeded for each egress stream. |
| vdoGrpMdaRequestedRtpPkts | long | tmnxVdoGrpMdaRequestedRtpPkts | The value of tmnxVdoGrpMdaRequestedRtpPkts indicates the number of Real-time Transport Protocol (RTP) packets requested in the Real-time Transport Control Protocol (RTCP) feedback (FB) messages received on this MDA. |
| vdoGrpMdaRtcpConfigErrors | long | tmnxVdoGrpMdaRtcpConfigErrors | The value of tmnxVdoGrpMdaRtcpConfigErrors indicates the number of Real-time Transport Control Protocol (RTCP) config errors on this MDA. These errors occur when there is inconsistency between the RTCP values and the configured values. |
| vdoGrpMdaRtcpIntErrors | long | tmnxVdoGrpMdaRtcpIntErrors | The value of tmnxVdoGrpMdaRtcpIntErrors indicates the number of Real-time Transport Control Protocol (RTCP) interface related errors on this MDA. |
| vdoGrpMdaRtcpIpcErrors | long | tmnxVdoGrpMdaRtcpIpcErrors | The value of tmnxVdoGrpMdaRtcpIpcErrors indicates the number of Real-time Transport Control Protocol (RTCP) inter-process communication message processing errors on this MDA. |
| vdoGrpMdaRtcpParseErrors | long | tmnxVdoGrpMdaRtcpParseErrors | The value of tmnxVdoGrpMdaRtcpParseErrors indicates the number of Real-time Transport Control Protocol (RTCP) packet parsing errors on this MDA. |

**(26 of 28)**

| 5620 SAM counter name | Type | MIB counter name | Description |
|---|---|---|---|
| vdoGrpMdaRtcpSgErrors | long | tmnxVdoGrpMdaRtcpSgErrors | The value of tmnxVdoGrpMdaRtcpSgErrors indicates the number of Real-time Transport Control Protocol (RTCP) channel errors on this MDA. These errors occue when a channel is not found for a given interface to process RTCP packets. |
| vdoGrpMdaRtcpSubErrors | long | tmnxVdoGrpMdaRtcpSubErrors | The value of tmnxVdoGrpMdaRtcpSubErrors indicates the number of Real-time Transport Control Protocol (RTCP) subscriber parameter errors on this MDA. These errors occur when the subscriber calculations exceed the maximum allowed bandwidth. |
| vdoGrpMdaRxDataOctets | UINT128 | tmnxVdoGrpMdaRxDataOctets | The value of tmnxVdoGrpMdaRxDataOctets indicates the number of data octets received on this MDA. |
| vdoGrpMdaRxDataOctetsHigh32 | long | tmnxVdoGrpMdaRxDataOctetsHigh32 | The value of tmnxVdoGrpMdaRxDataOctetsHigh32 indicates the higher 32 bits of the value of tmnxVdoGrpMdaRxDataOctets. |
| vdoGrpMdaRxDataOctetsLow32 | long | tmnxVdoGrpMdaRxDataOctetsLow32 | The value of tmnxVdoGrpMdaRxDataOctetsLow32 indicates the lower 32 bits of the value of tmnxVdoGrpMdaRxDataOctets. |
| vdoGrpMdaRxDataPacketErrors | UINT128 | tmnxVdoGrpMdaRxDataPacketErrors | The value of tmnxVdoGrpMdaRxDataPacketErrors indicates the number of malformed or non-RTP (Real Time Transport Protocol) packets received on this MDA. |
| vdoGrpMdaRxDataPackets | UINT128 | tmnxVdoGrpMdaRxDataPackets | The value of tmnxVdoGrpMdaRxDataPackets indicates the number of data packets received on this MDA. |
| vdoGrpMdaRxDataPacketsHigh32 | long | tmnxVdoGrpMdaRxDataPacketsHigh32 | The value of tmnxVdoGrpMdaRxDataPacketsHigh32 indicates the higher 32 bits of the value of tmnxVdoGrpMdaRxDataPackets. |
| vdoGrpMdaRxDataPacketsLow32 | long | tmnxVdoGrpMdaRxDataPacketsLow32 | The value of tmnxVdoGrpMdaRxDataPacketsLow32 indicates the lower 32 bits of the value of tmnxVdoGrpMdaRxDataPackets. |
| vdoGrpMdaRxDataPktErrsHigh32 | long | tmnxVdoGrpMdaRxDataPktErrsHigh32 | The value of tmnxVdoGrpMdaRxDataPktErrsHigh32 indicates the higher 32 bits of the value of tmnxVdoGrpMdaRxDataPacketErrors. |
| vdoGrpMdaRxDataPktErrsLow32 | long | tmnxVdoGrpMdaRxDataPktErrsLow32 | The value of tmnxVdoGrpMdaRxDataPktErrsLow32 indicates the lower 32 bits of the value of tmnxVdoGrpMdaRxDataPacketErrors. |
| vdoGrpMdaSsrcCollisions | long | tmnxVdoGrpMdaSsrcCollisions | The value of tmnxVdoGrpMdaSsrcCollisions indicates the number of synchronization source (SSRC) id collisions on this MDA. |

**(27 of 28)**

| 5620 SAM counter name | Type | MIB counter name | Description |
|---|---|---|---|
| vdoGrpMdaTxDataOctets | UINT128 | tmnxVdoGrpMdaTxDataOctets | The value of tmnxVdoGrpMdaTxDataOctets indicates the number of data octets transmitted on this MDA. |
| vdoGrpMdaTxDataOctetsHigh32 | long | tmnxVdoGrpMdaTxDataOctetsHigh32 | The value of tmnxVdoGrpMdaTxDataOctetsHigh32 indicates the higher 32 bits of the value of tmnxVdoGrpMdaTxDataOctets. |
| vdoGrpMdaTxDataOctetsLow32 | long | tmnxVdoGrpMdaTxDataOctetsLow32 | The value of tmnxVdoGrpMdaTxDataOctetsLow32 indicates the lower 32 bits of the value of tmnxVdoGrpMdaTxDataOctets. |
| vdoGrpMdaTxDataPacketErrors | UINT128 | tmnxVdoGrpMdaTxDataPacketErrors | The value of tmnxVdoGrpMdaTxDataPacketErrors indicates the number of failed data packets due to lack of resources to be transmitted on this MDA. |
| vdoGrpMdaTxDataPackets | UINT128 | tmnxVdoGrpMdaTxDataPackets | The value of tmnxVdoGrpMdaTxDataPackets indicates the number of data packets transmitted on this MDA. |
| vdoGrpMdaTxDataPacketsHigh32 | long | tmnxVdoGrpMdaTxDataPacketsHigh32 | The value of tmnxVdoGrpMdaTxDataPacketsHigh32 indicates the higher 32 bits of the value of tmnxVdoGrpMdaTxDataPackets. |
| vdoGrpMdaTxDataPacketsLow32 | long | tmnxVdoGrpMdaTxDataPacketsLow32 | The value of tmnxVdoGrpMdaTxDataPacketsLow32 indicates the lower 32 bits of the value of tmnxVdoGrpMdaTxDataPackets. |
| vdoGrpMdaTxDataPktErrsHigh32 | long | tmnxVdoGrpMdaTxDataPktErrsHigh32 | The value of tmnxVdoGrpMdaTxDataPktErrsHigh32 indicates the higher 32 bits of the value of tmnxVdoGrpMdaTxDataPacketErrors. |
| vdoGrpMdaTxDataPktErrsLow32 | long | tmnxVdoGrpMdaTxDataPktErrsLow32 | The value of tmnxVdoGrpMdaTxDataPktErrsLow32 indicates the lower 32 bits of the value of tmnxVdoGrpMdaTxDataPacketErrors. |
| vdoGrpMdaTxLostPackets | long | tmnxVdoGrpMdaTxLostPackets | The value of tmnxVdoGrpMdaTxLostPackets indicates the number of packets not found in the video MDA buffer for retransmission. When a retransmission request arrives, packets are checked in the buffer and if they are not found, the value of this object is incremented. |
| vdoGrpMdaUsedMemory | long | tmnxVdoGrpMdaUsedMemory | The value of tmnxVdoGrpMdaUsedMemory indicates the amount of cache being used by the video group for storing the video stream. |

**(28 of 28)**

**Table A-19 isis statistics**

| 5620 SAM counter name | Type | MIB counter name | Description |
|---|---|---|---|
| **InterfaceLevelOneReceivingStats**<br>MIB table name: ISIS-MIB.isisPacketCountTable<br>Monitored class: isis.InterfaceLevelOneConfig | | | |
| cnspCount | long | isisPacketCountCSNP | The number of IS-IS CSNPs seen in this direction at this level. REFERENCE ISIS.aoi iSISControlPDUsSent (43). |
| helloCount | long | isisPacketCountHello | The number of IS-IS Hello PDUs seen in this direction at this level. REFERENCE ISIS.aoi iSISControlPDUsSent (43). |
| lspCount | long | isisPacketCountLSP | The number of IS-IS LSPs seen in this direction at this level. REFERENCE ISIS.aoi iSISControlPDUsSent (43). |
| psnpCount | long | isisPacketCountPSNP | The number of IS-IS PSNPs seen in this direction at this level. REFERENCE ISIS.aoi iSISControlPDUsSent (43). |
| **InterfaceLevelOneSendingStats**<br>MIB table name: ISIS-MIB.isisPacketCountTable<br>Monitored class: isis.InterfaceLevelOneConfig | | | |
| cnspCount | long | isisPacketCountCSNP | The number of IS-IS CSNPs seen in this direction at this level. REFERENCE ISIS.aoi iSISControlPDUsSent (43). |
| helloCount | long | isisPacketCountHello | The number of IS-IS Hello PDUs seen in this direction at this level. REFERENCE ISIS.aoi iSISControlPDUsSent (43). |
| lspCount | long | isisPacketCountLSP | The number of IS-IS LSPs seen in this direction at this level. REFERENCE ISIS.aoi iSISControlPDUsSent (43). |
| psnpCount | long | isisPacketCountPSNP | The number of IS-IS PSNPs seen in this direction at this level. REFERENCE ISIS.aoi iSISControlPDUsSent (43). |
| **InterfaceLevelTwoReceivingStats**<br>MIB table name: ISIS-MIB.isisPacketCountTable<br>Monitored class: isis.InterfaceLevelTwoConfig | | | |
| cnspCount | long | isisPacketCountCSNP | The number of IS-IS CSNPs seen in this direction at this level. REFERENCE ISIS.aoi iSISControlPDUsSent (43). |
| helloCount | long | isisPacketCountHello | The number of IS-IS Hello PDUs seen in this direction at this level. REFERENCE ISIS.aoi iSISControlPDUsSent (43). |
| lspCount | long | isisPacketCountLSP | The number of IS-IS LSPs seen in this direction at this level. REFERENCE ISIS.aoi iSISControlPDUsSent (43). |
| psnpCount | long | isisPacketCountPSNP | The number of IS-IS PSNPs seen in this direction at this level. REFERENCE ISIS.aoi iSISControlPDUsSent (43). |
| **InterfaceLevelTwoSendingStats**<br>MIB table name: ISIS-MIB.isisPacketCountTable<br>Monitored class: isis.InterfaceLevelTwoConfig | | | |

**(1 of 4)**

| 5620 SAM counter name | Type | MIB counter name | Description |
|---|---|---|---|
| cnspCount | long | isisPacketCountCSNP | The number of IS-IS CSNPs seen in this direction at this level. REFERENCE ISIS.aoi iSISControlPDUsSent (43). |
| helloCount | long | isisPacketCountHello | The number of IS-IS Hello PDUs seen in this direction at this level. REFERENCE ISIS.aoi iSISControlPDUsSent (43). |
| lspCount | long | isisPacketCountLSP | The number of IS-IS LSPs seen in this direction at this level. REFERENCE ISIS.aoi iSISControlPDUsSent (43). |
| psnpCount | long | isisPacketCountPSNP | The number of IS-IS PSNPs seen in this direction at this level. REFERENCE ISIS.aoi iSISControlPDUsSent (43). |
| **LinkStatePduSiteStats**<br>MIB table name: TIMETRA-ISIS-MIB.vRtrIsisStatsTable<br>Monitored class: isis.Site | | | |
| csnpDropped | long | vRtrIsisCSNPDrop | The count of link state PDUs dropped by this instance of the protocol is maintained by vRtrIsisCSNPDrop. |
| csnpReceived | long | vRtrIsisCSNPRecd | The count of link state PDUs received by this instance of the protocol is maintained by vRtrIsisCSNPRecd. |
| csnpRetransmitted | long | vRtrIsisCSNPRetrans | The count of link state PDUs that had to be retransmitted by this instance of the protocol is maintained by vRtrIsisCSNPRetrans. |
| csnpSent | long | vRtrIsisCSNPSent | The count of link state PDUs sent out by this instance of the protocol is maintained by vRtrIsisCSNPSent. |
| helloDropped | long | vRtrIsisIIHDrop | The count of link state PDUs dropped by this instance of the protocol is maintained by vRtrIsisIIHDrop. |
| helloReceived | long | vRtrIsisIIHRecd | The count of link state PDUs received by this instance of the protocol is maintained by vRtrIsisIIHRecd. |
| helloRetransmitted | long | vRtrIsisIIHRetrans | The count of link state PDUs that had to be retransmitted by this instance of the protocol is maintained by vRtrIsisIIHRetrans. |
| helloSent | long | vRtrIsisIIHSent | The count of link state PDUs sent out by this instance of the protocol is maintained by vRtrIsisIIHSent. |
| lspDropped | long | vRtrIsisLSPDrop | The count of link state PDUs dropped by this instance of the protocol is maintained by vRtrIsisLSPDrop. |
| lspReceived | long | vRtrIsisLSPRecd | The count of link state PDUs received by this instance of the protocol is maintained by vRtrIsisLSPRecd. |
| lspRetransmitted | long | vRtrIsisLSPRetrans | The count of link state PDUs that had to be retransmitted by this instance of the protocol is maintained by vRtrIsisLSPRetrans. |

**(2 of 4)**

| 5620 SAM counter name | Type | MIB counter name | Description |
|---|---|---|---|
| lspSent | long | vRtrIsisLSPSent | The count of link state PDUs sent out by this instance of the protocol is maintained by vRtrIsisLSPSent. |
| psnpDropped | long | vRtrIsisPSNPDrop | The count of link state PDUs dropped by this instance of the protocol is maintained by vRtrIsisPSNPDrop. |
| psnpReceived | long | vRtrIsisPSNPRecd | The count of link state PDUs received by this instance of the protocol is maintained by vRtrIsisPSNPRecd. |
| psnpRetransmitted | long | vRtrIsisPSNPRetrans | The count of link state PDUs that had to be retransmitted by this instance of the protocol is maintained by vRtrIsisPSNPRetrans. |
| psnpSent | long | vRtrIsisPSNPSent | The count of link state PDUs sent out by this instance of the protocol is maintained by vRtrIsisPSNPSent. |
| unknownDropped | long | vRtrIsisUnknownDrop | The count of link state PDUs dropped by this instance of the protocol is maintained by vRtrIsisUnknownDrop. |
| unknownReceived | long | vRtrIsisUnknownRecd | The count of link state PDUs received by this instance of the protocol is maintained by vRtrIsisUnknownRecd. |
| unknownRetransmitted | long | vRtrIsisUnknownRetrans | The count of link state PDUs that had to be retransmitted by this instance of the protocol is maintained by vRtrIsisUnknownRetrans. |
| unknownSent | long | vRtrIsisUnknownSent | The count of link state PDUs sent out by this instance of the protocol is maintained by vRtrIsisUnknownSent. |
| **SiteStats**<br>MIB table name: TIMETRA-ISIS-MIB.vRtrIsisStatsTable<br>Monitored class: isis.Site | | | |
| cspfDroppedRequests | long | vRtrIsisCSPFDroppedRequests | vRtrIsisCSPFDroppedRequests maintains the number of dropped CSPF requests by the protocol. |
| cspfPathsFound | long | vRtrIsisCSPFPathsFound | vRtrIsisCSPFPathsFound maintains the number of responses to CSPF requests for which paths satisfying the constraints were found. |
| cspfPathsNotFound | long | vRtrIsisCSPFPathsNotFound | vRtrIsisCSPFPathsFound maintains the number of responses to CSPF requests for which no paths satisfying the constraints were found. |
| cspfRequests | long | vRtrIsisCSPFRequests | vRtrIsisCSPFRequests maintains the number of CSPF requests made to the protocol. |
| initiatedPurges | long | vRtrIsisInitiatedPurges | The value of vRtrIsisInitiatedPurges counts the number of times purges have been initiated. |
| lspRegenerations | long | vRtrIsisLSPRegenerations | The value of vRtrIsisLSPRegenerations maintains the count of LSP regenerations. |

**(3 of 4)**

| 5620 SAM counter name | Type | MIB counter name | Description |
|---|---|---|---|
| spfRuns | long | vRtrIsisSpfRuns | The value of vRtrIsisSpfRuns indicates the number of times shortest path first calculations have been made. |

**(4 of 4)**

### Table A-20 l2fib statistics

| 5620 SAM counter name | Type | MIB counter name | Description |
|---|---|---|---|
| **MFibGrpSrcStats**<br>MIB table name: TIMETRA-SERV-MIB.tlsMFibStatsTable<br>Monitored class: l2fib.MFibGrpSrc | | | |
| forwardedOctets | UINT128 | tlsMFibStatsForwardedOctets | The value of tlsMFibStatsForwardedOctets indicates the number of octets that were forwarded to the SAPs and SDPs listed in the tlsMFibInfoTable. |
| forwardedPkts | UINT128 | tlsMFibStatsForwardedPkts | The value of tlsMFibStatsForwardedPkts indicates the number of multicast packets that were forwarded to the SAPs and SDPs listed in the tlsMFibInfoTable. |

### Table A-21 l2fwd statistics

| 5620 SAM counter name | Type | MIB counter name | Description |
|---|---|---|---|
| **AccessInterfaceStpStats**<br>MIB table name: TIMETRA-SAP-MIB.sapTlsInfoTable<br>Monitored class: l2fwd.AccessInterfaceStp | | | |
| forwardTransitions | long | sapTlsStpForwardTransitions | The value of the object sapTlsStpForwardTransitions indicates the number of times this port has transitioned from the Learning state to the Forwarding state. |
| inBadBpdus | long | sapTlsStpInBadBpdus | This object specifies the number of bad BPDUs received on this SAP. |
| inConfigBpdus | long | sapTlsStpInConfigBpdus | The value of the object sapTlsStpInConfigBpdus indicates the number of Configuration BPDUs received on this SAP. |
| inMultipleSpanningTreeBpdus | long | sapTlsStpInMstBpdus | The value of the object sapTlsStpInMstBpdus indicates the number of Multiple Spanning Tree (MST) BPDUs received on this SAP. |
| inRapidSpanningTreeBpdus | long | sapTlsStpInRstBpdus | The value of the object sapTlsStpInRstBpdus indicates the number of Rapid Spanning Tree (RST) BPDUs received on this SAP. |

**(1 of 6)**

| 5620 SAM counter name | Type | MIB counter name | Description |
|---|---|---|---|
| inTcnBpdus | long | sapTlsStpInTcnBpdus | The value of the object sapTlsStpInTcnBpdus indicates the number of Topology Change Notification BPDUs received on this SAP. |
| outConfigBpdus | long | sapTlsStpOutConfigBpdus | The value of the object sapTlsStpOutConfigBpdus indicates the number of Configuration BPDUs sent out this SAP. |
| outMultipleSpanningTreeBpdus | long | sapTlsStpOutMstBpdus | The value of the object sapTlsStpOutMstBpdus indicates the number of Multiple Spanning Tree (MST) BPDUs sent out on this SAP. |
| outRapidSpanningTreeBpdus | long | sapTlsStpOutRstBpdus | The value of the object sapTlsStpOutRstBpdus indicates the number of Rapid Spanning Tree (RST) BPDUs sent out on this SAP. |
| outTcnBpdus | long | sapTlsStpOutTcnBpdus | This object specifies the number of Topology Change Notification BPDUs sent out this SAP. |
| **CircuitMrpInfoStats**<br>MIB table name: TIMETRA-SDP-MIB.sdpBindTlsMrpTable<br>Monitored class: l2fwd.CircuitMrpInfo | | | |
| mrpDroppedPdus | long | sdpBindTlsMrpDroppedPdus | The value of sdpBindTlsMrpDroppedPdus indicates the number of dropped MRP packets on this SDP Bind. |
| mrpRxEmptyEvent | long | sdpBindTlsMrpRxEmptyEvent | The value of sdpBindTlsMrpRxEmptyEvent indicates the number of 'Empty' MRP events received on this SDP Bind. |
| mrpRxInEvent | long | sdpBindTlsMrpRxInEvent | The value of sdpBindTlsMrpRxInEvent indicates the number of 'In' MRP events received on this SDP Bind. |
| mrpRxJoinEmptyEvent | long | sdpBindTlsMrpRxJoinEmptyEvent | The value of sdpBindTlsMrpRxJoinEmptyEvent indicates the number of 'Join Empty' MRP events received on this SDP Bind. |
| mrpRxJoinInEvent | long | sdpBindTlsMrpRxJoinInEvent | The value of sdpBindTlsMrpRxJoinInEvent indicates the number of 'Join-In' MRP events received on this SDP Bind. |
| mrpRxLeaveEvent | long | sdpBindTlsMrpRxLeaveEvent | The value of sdpBindTlsMrpRxLeaveEvent indicates the number of 'Leave' MRP events received on this SDP Bind. |
| mrpRxNewEvent | long | sdpBindTlsMrpRxNewEvent | The value of sdpBindTlsMrpRxNewEvent indicates the number of 'New' MRP events received on this SDP Bind. |
| mrpRxPdus | long | sdpBindTlsMrpRxPdus | The value of sdpBindTlsMrpRxPdus indicates the number of MRP packets received on this SDP Bind. |
| mrpTxEmptyEvent | long | sdpBindTlsMrpTxEmptyEvent | The value of sdpBindTlsMrpTxEmptyEvent indicates the number of 'Empty' MRP events transmitted on this SDP Bind. |
| mrpTxInEvent | long | sdpBindTlsMrpTxInEvent | The value of sdpBindTlsMrpTxInEvent indicates the number of 'In' MRP events transmitted on this SDP Bind. |

**(2 of 6)**

| 5620 SAM counter name | Type | MIB counter name | Description |
|---|---|---|---|
| mrpTxJoinEmptyEvent | long | sdpBindTlsMrpTxJoinEmptyEvent | The value of sdpBindTlsMrpTxJoinEmptyEvent indicates the number of 'Join Empty' MRP events transmitted on this SDP Bind. |
| mrpTxJoinInEvent | long | sdpBindTlsMrpTxJoinInEvent | The value of sdpBindTlsMrpTxJoinInEvent indicates the number of 'Join-In' MRP events transmitted on this SDP Bind. |
| mrpTxLeaveEvent | long | sdpBindTlsMrpTxLeaveEvent | The value of sdpBindTlsMrpTxLeaveEvent indicates the number of 'Leave' MRP events transmitted on this SDP Bind. |
| mrpTxNewEvent | long | sdpBindTlsMrpTxNewEvent | The value of sdpBindTlsMrpTxNewEvent indicates the number of 'New' MRP events transmitted on this SDP Bind. |
| mrpTxPdus | long | sdpBindTlsMrpTxPdus | The value of sdpBindTlsMrpTxPdus indicates the number of MRP packets transmitted on this SDP Bind. |
| **CircuitStpStats**<br>MIB table name: TIMETRA-SDP-MIB.sdpBindTlsTable<br>Monitored class: l2fwd.CircuitStp | | | |
| forwardTransitions | long | sdpBindTlsStpForwardTransitions | The value of the object sdpBindTlsStpForwardTransitions indicates the number of times this port has transitioned from the Learning state to the Forwarding state. |
| inBadBpdus | long | sdpBindTlsStpInBadBpdus | The value of the object sdpBindTlsStpInBadBpdus indicates the number of bad BPDUs received on this SDP Bind. |
| inConfigBpdus | long | sdpBindTlsStpInConfigBpdus | The value of the object sdpBindTlsStpInConfigBpdus indicates the number of Configuration BPDUs received on this SDP Bind. |
| inRapidSpanningTreeBpdus | long | sdpBindTlsStpInRstBpdus | The value of the object sdpBindTlsStpInRstBpdus indicates the number of Rapid Spanning Tree (Rst) BPDUs received on this SDP. |
| inTcnBpdus | long | sdpBindTlsStpInTcnBpdus | The value of the object sdpBindTlsStpInTcnBpdus indicates the number of Topology Change Notification BPDUs received on this SDP Bind. |
| outConfigBpdus | long | sdpBindTlsStpOutConfigBpdus | The value of the object sdpBindTlsStpOutConfigBpdus indicates the number of Configuration BPDUs sent out this SDP Bind. |
| outRapidSpanningTreeBpdus | long | sdpBindTlsStpOutRstBpdus | The value of the object sdpBindTlsStpOutRstBpdus indicates the number of Rapid Spanning Tree (Rstp) BPDUs sent out on this SDP. |
| outTcnBpdus | long | sdpBindTlsStpOutTcnBpdus | The value of the object sdpBindTlsStpOutTcnBpdus indicates the number of Topology Change Notification BPDUs sent out this SDP Bind. |

**(3 of 6)**

| 5620 SAM counter name | Type | MIB counter name | Description |
|---|---|---|---|
| **L2AccessInterfaceMrpInfoStats**<br>MIB table name: TIMETRA-SAP-MIB.sapTlsMrpTable<br>Monitored class: l2fwd.L2AccessInterfaceMrpInfo | | | |
| mrpDroppedPdus | long | sapTlsMrpDroppedPdus | The value of sapTlsMrpDroppedPdus indicates the number of dropped MRP packets on this SAP. |
| mrpRxEmptyEvent | long | sapTlsMrpRxEmptyEvent | The value of sapTlsMrpRxEmptyEvent indicates the number of 'Empty' MRP events received on this SAP. |
| mrpRxInEvent | long | sapTlsMrpRxInEvent | The value of sapTlsMrpRxInEvent indicates the number of 'In' MRP events received on this SAP. |
| mrpRxJoinEmptyEvent | long | sapTlsMrpRxJoinEmptyEvent | The value of sapTlsMrpRxJoinEmptyEvent indicates the number of 'Join Empty' MRP events received on this SAP. |
| mrpRxJoinInEvent | long | sapTlsMrpRxJoinInEvent | The value of sapTlsMrpRxJoinInEvent indicates the number of 'Join-In' MRP events received on this SAP. |
| mrpRxLeaveEvent | long | sapTlsMrpRxLeaveEvent | The value of sapTlsMrpRxLeaveEvent indicates the number of 'Leave' MRP events received on this SAP. |
| mrpRxNewEvent | long | sapTlsMrpRxNewEvent | The value of sapTlsMrpRxNewEvent indicates the number of 'New' MRP events received on this SAP. |
| mrpRxPdus | long | sapTlsMrpRxPdus | The value of sapTlsMrpRxPdus indicates the number of MRP packets received on this SAP. |
| mrpTxEmptyEvent | long | sapTlsMrpTxEmptyEvent | The value of sapTlsMrpTxEmptyEvent indicates the number of 'Empty' MRP events transmitted on this SAP. |
| mrpTxInEvent | long | sapTlsMrpTxInEvent | The value of sapTlsMrpTxInEvent indicates the number of 'In' MRP events transmitted on this SAP. |
| mrpTxJoinEmptyEvent | long | sapTlsMrpTxJoinEmptyEvent | The value of sapTlsMrpTxJoinEmptyEvent indicates the number of 'Join Empty' MRP events transmitted on this SAP. |
| mrpTxJoinInEvent | long | sapTlsMrpTxJoinInEvent | The value of sapTlsMrpTxJoinInEvent indicates the number of 'Join-In' MRP events transmitted on this SAP. |
| mrpTxLeaveEvent | long | sapTlsMrpTxLeaveEvent | The value of sapTlsMrpTxLeaveEvent indicates the number of 'Leave' MRP events transmitted on this SAP. |
| mrpTxNewEvent | long | sapTlsMrpTxNewEvent | The value of sapTlsMrpTxNewEvent indicates the number of 'New' MRP events transmitted on this SAP. |
| mrpTxPdus | long | sapTlsMrpTxPdus | The value of sapTlsMrpTxPdus indicates the number of MRP packets transmitted on this SAP. |
| **PipStpInfoStats**<br>MIB table name: TIMETRA-SERV-MIB.tlsPipInfoTable<br>Monitored class: l2fwd.PipStpInfo | | | |

**(4 of 6)**

| 5620 SAM counter name | Type | MIB counter name | Description |
|---|---|---|---|
| pipStpForwardTransitions | long | tlsPipStpForwardTransitions | The value of the object tlsPipStpForwardTransitions indicates the number of times this port has transitioned from the Learning state to the Forwarding state. |
| pipStpInBadBpdus | long | tlsPipStpInBadBpdus | This object specifies the number of bad BPDUs received on this PIP uplink. |
| pipStpInConfigBpdus | long | tlsPipStpInConfigBpdus | The value of the object tlsPipStpInConfigBpdus indicates the number of Configuration BPDUs received on this PIP uplink. |
| pipStpInMstBpdus | long | tlsPipStpInMstBpdus | The value of the object tlsPipStpInMstBpdus indicates the number of Multiple Spanning Tree (MST) BPDUs received on this PIP uplink. |
| pipStpInRstBpdus | long | tlsPipStpInRstBpdus | The value of the object tlsPipStpInRstBpdus indicates the number of Rapid Spanning Tree (RST) BPDUs received on this PIP uplink. |
| pipStpInTcnBpdus | long | tlsPipStpInTcnBpdus | The value of the object tlsPipStpInTcnBpdus indicates the number of Topology Change Notification BPDUs received on this PIP uplink. |
| pipStpOutConfigBpdus | long | tlsPipStpOutConfigBpdus | The value of the object tlsPipStpOutConfigBpdus indicates the number of Configuration BPDUs sent out this PIP uplink. |
| pipStpOutMstBpdus | long | tlsPipStpOutMstBpdus | The value of the object tlsPipStpOutMstBpdus indicates the number of Multiple Spanning Tree (MST) BPDUs sent out on this PIP uplink. |
| pipStpOutRstBpdus | long | tlsPipStpOutRstBpdus | The value of the object tlsPipStpOutRstBpdus indicates the number of Rapid Spanning Tree (RST) BPDUs sent out on this PIP uplink. |
| pipStpOutTcnBpdus | long | tlsPipStpOutTcnBpdus | This object specifies the number of Topology Change Notification BPDUs sent out this PIP uplink. |
| **SiteFibStats**<br>MIB table name: TIMETRA-SERV-MIB.svcTlsInfoTable<br>Monitored class: l2fwd.SiteFib | | | |
| entries | long | svcTlsFdbNumEntries | The value of the object svcTlsFdbNumEntries indicates the current number of entries in the FDB of this service. |

**(5 of 6)**

| 5620 SAM counter name | Type | MIB counter name | Description |
|---|---|---|---|
| provisionedSize | long | svcTlsFdbTableSize | The value of the object svcTlsFdbTableSize specifies the maximum number of learned and static entries allowed in the FDB of this service. The maximum value of svcTlsFdbTableSize is '511999', when the the value of TIMETRA-CHASSIS-MIB::tmnxChassisOperMode is 'd'. The maximum value of svcTlsFdbTableSize is '196607', when the the value of TIMETRA-CHASSIS-MIB::tmnxChassisOperMode is 'c'. In other cases, the maximum value of svcTlsFdbTableSize is '131071'. DEFVAL { 250 }. |
| staticEntries | long | svcTlsFdbNumStaticEntries | The value of the object svcTlsFdbNumStaticEntries indicates the current number of static entries in the FDB of this service. |
| **SiteStpStats**<br>MIB table name: TIMETRA-SERV-MIB.svcTlsInfoTable<br>Monitored class: l2fwd.SiteStp | | | |
| timeSinceTopologyChange | long | svcTlsStpTimeSinceTopologyChange | The value of the object svcTlsStpTimeSinceTopologyChange indicates the time (in hundredths of a second) since the last time a topology change was detected by the Spanning Tree Protocol instance associated with this service. |
| topologyChanges | long | svcTlsStpTopologyChanges | The value of the object svcTlsStpTopologyChanges indicates the total number of topology changes detected by the Spanning Tree Protocol instance associated with this service since the management entity was last reset or initialized. |

**(6 of 6)**

### Table A-22 l2tp statistics

| 5620 SAM counter name | Type | MIB counter name | Description |
|---|---|---|---|
| **GroupProfileStats**<br>MIB table name: TIMETRA-L2TP-MIB.tmnxL2tpTgStatTable<br>Monitored class: l2tp.GroupProfile | | | |
| activeSessions | long | tmnxL2tpTgStatActiveSessions | The value of tmnxL2tpTgStatActiveSessions indicates the number of sessions currently established in this tunnel group. |
| activeTunnels | long | tmnxL2tpTgStatActiveTunnels | The value of tmnxL2tpTgStatActiveTunnels indicates the number of tunnels currently established in this tunnel group. |

**(1 of 11)**

| 5620 SAM counter name | Type | MIB counter name | Description |
|---|---|---|---|
| attemptedSessions | long | tmnxL2tpTgStatTotalSessions | The value of tmnxL2tpTgStatTotalSessions indicates the number of session creation attempts in this tunnel group since the last re-initialization of the local network management subsystem, or the last time the system statistics were cleared. |
| attemptedTunnels | long | tmnxL2tpTgStatTotalTunnels | The value of tmnxL2tpTgStatTotalTunnels indicates the total number of tunnel set up attempts in this tunnel group since the last re-initialization of the local network management subsystem, or the last time the system statistics were cleared. |
| cleared | long | tmnxL2tpTgStatCleared | The value of the object tmnxL2tpTgStatCleared indicates the value of sysUpTime when the tunnel group statistics were cleared. The value zero indicates that the statistics have not been cleared since the last re-initialization of the local network management subsystem. |
| controlRxOctets | UINT128 | tmnxL2tpTgStatControlRxOctets | The value of tmnxL2tpTgStatControlRxOctets indicates the number of control channel octets received by the current tunnels in this tunnel group. |
| controlRxOctetsHw | long | tmnxL2tpTgStatControlRxOctetsHw | The value of tmnxL2tpTgStatControlRxOctetsHw indicates the higher 32-bits word of the value of tmnxL2tpTgStatControlRxOctets. |
| controlRxOctetsLw | long | tmnxL2tpTgStatControlRxOctetsLw | The value of tmnxL2tpTgStatControlRxOctetsLw indicates the lower 32-bits word of the value of tmnxL2tpTgStatControlRxOctets. |
| controlRxPkts | long | tmnxL2tpTgStatControlRxPkts | The value of tmnxL2tpTgStatControlRxPkts indicates the accumulated number of control packets received by the current tunnels in this tunnel group. |
| controlTxOctets | UINT128 | tmnxL2tpTgStatControlTxOctets | The value of tmnxL2tpTgStatControlTxOctets indicates the accumulated number of control channel octets that were transmitted to the current tunnel endpoints in this tunnel group. |
| controlTxOctetsHw | long | tmnxL2tpTgStatControlTxOctetsHw | The value of tmnxL2tpTgStatControlTxOctetsHw indicates the higher 32-bits word of the value of tmnxL2tpTgStatControlTxOctets. |
| controlTxOctetsLw | long | tmnxL2tpTgStatControlTxOctetsLw | The value of tmnxL2tpTgStatControlTxOctetsLw indicates the lower 32-bits word of the value of tmnxL2tpTgStatControlTxOctets. |

**(2 of 11)**

| 5620 SAM counter name | Type | MIB counter name | Description |
|---|---|---|---|
| controlTxPkts | long | tmnxL2tpTgStatControlTxPkts | The value of tmnxL2tpTgStatControlTxPkts indicates the accumulated number of control packets that were transmitted to the current tunnel endpoints in this tunnel group. |
| errorRxPkts | long | tmnxL2tpTgStatErrorRxPkts | The value of tmnxL2tpTgStatErrorRxPkts indicates the accumulated number of errored packets that were received on the current tunnels in this tunnel group. |
| errorTxPkts | long | tmnxL2tpTgStatErrorTxPkts | The value of tmnxL2tpTgStatErrorTxPkts indicates the accumulated number of packet transmission errors on the current tunnels in this tunnel group. |
| failedSessions | long | tmnxL2tpTgStatFailedSessions | The value of tmnxL2tpTgStatFailedSessions indicates the number of sessions in this tunnel group that failed to reach the established state since the last re-initialization of the local network management subsystem, or the last time the system statistics were cleared. |
| failedTuAuth | long | tmnxL2tpTgStatFailedTuAuth | The value of tmnxL2tpTgStatFailedTuAuth indicates the number of tunnels in this tunnel group that failed authentication since the last re-initialization of the local network management subsystem, or the last time the system statistics were cleared. |
| failedTunnels | long | tmnxL2tpTgStatFailedTunnels | The value of tmnxL2tpTgStatFailedTunnels indicates the number of tunnels in this tunnel group that failed to reach the established state since the last re-initialization of the local network management subsystem, or the last time the system statistics were cleared. |
| sessionAssignMethod | int | tmnxL2tpTgStatSeAssignMethod | The value of the object tmnxL2tpTgStatSeAssignMethod indicates the latest actual method used for the authentication of the tunnels in this Layer Two Tunneling Protocol Tunnel Group. Note that the next tunnel that will be set up in this L2TP tunnel group may or may not use the same method, since the configuration of the RADIUS server may have changed in the meantime. |
| sessionLimit | long | tmnxL2tpTgStatSessionLimit | The value of tmnxL2tpTgStatSessionLimit indicates the actual session limit of this tunnel group. |
| state | int | tmnxL2tpTgStatState | The value of tmnxL2tpTgStatState indicates the operational state of this Layer Two Tunneling Protocol Tunnel Group. |
| totalSessions | long | tmnxL2tpTgStatSessions | The value of tmnxL2tpTgStatSessions indicates the actual number of sessions in this tunnel group. |

**(3 of 11)**

| 5620 SAM counter name | Type | MIB counter name | Description |
|---|---|---|---|
| totalTunnels | long | tmnxL2tpTgStatTunnels | The value of tmnxL2tpTgStatTunnels indicates the actual number of tunnels in this tunnel group. |
| **PeerProtStats**<br>MIB table name: TIMETRA-L2TP-MIB.tmnxL2tpPeerProtStatsTable<br>Monitored class: l2tp.Peer | | | |
| protInstance | long | tmnxL2tpPeerProtStatsInstance | The value of the object tmnxL2tpPeerProtStatsInstance indicates the instance identifier of the statistics contained in this conceptual row. For example: if the value of the object tmnxL2tpPeerProtStatsType is equal to 'outgoingMsgType', the value of tmnxL2tpPeerProtStatsInstance is a message identifier, e.g. instance '2' refers to '(SCCRP) Start-Control-Connection-Reply', and the value of tmnxL2tpPeerProtStatsVal indicates the number of SCCRP messages transmitted for this tunnel. Unknown protocol messages are counted with instance zero. |
| protName | String | tmnxL2tpPeerProtStatsName | The value of the object tmnxL2tpPeerProtStatsName indicates the human-readable identifier of the statistics contained in this conceptual row. In the same example, the value of tmnxL2tpPeerProtStatsName is '(SCCRP) Start-Control-Connection-Reply'. |
| protType | int | tmnxL2tpPeerProtStatsType | The value of the object tmnxL2tpPeerProtStatsType indicates the type of L2TP protocol statistics contained in this conceptual row. |
| protVal | long | tmnxL2tpPeerProtStatsVal | The value of the object tmnxL2tpPeerProtStatsVal indicates the value of the statistics contained in this conceptual row. |
| **PeerStats**<br>MIB table name: TIMETRA-L2TP-MIB.tmnxL2tpPeerStatTable<br>Monitored class: l2tp.Peer | | | |
| activeSessions | long | tmnxL2tpPeerStatActiveSessions | The value of tmnxL2tpPeerStatActiveSessions indicates the number of sessions associated with this peer that are currently established. |
| activeTunnels | long | tmnxL2tpPeerStatActiveTunnels | The value of tmnxL2tpPeerStatActiveTunnels indicates the number of tunnels associated with this peer that are currently established. |
| controlRxOct | UINT128 | tmnxL2tpPeerStatControlRxOct | The value of tmnxL2tpPeerStatControlRxOct indicates the number of control channel octets received in this tunnel since the last re-initialization of the local network management subsystem, or the last time the tunnel statistics were cleared. |

**(4 of 11)**

| 5620 SAM counter name | Type | MIB counter name | Description |
|---|---|---|---|
| controlRxOctHw | long | tmnxL2tpPeerStatControlRxOctHw | The value of tmnxL2tpPeerStatControlRxOctHw indicates the higher 32-bits word of the value of tmnxL2tpPeerStatControlRxOct. |
| controlRxOctLw | long | tmnxL2tpPeerStatControlRxOctLw | The value of tmnxL2tpPeerStatControlRxOctLw indicates the lower 32-bits word of the value of tmnxL2tpPeerStatControlRxOct. |
| controlRxPkts | long | tmnxL2tpPeerStatControlRxPkts | The value of tmnxL2tpPeerStatControlRxPkts indicates the number of control packets received by this tunnel since the last re-initialization of the local network management subsystem, or the last time the tunnel statistics were cleared. |
| controlTxOct | UINT128 | tmnxL2tpPeerStatControlTxOct | The value of tmnxL2tpPeerStatControlTxOct indicates the number of control channel octets that were transmitted to the current tunnel endpoints in this tunnel since the last re-initialization of the local network management subsystem, or the last time the tunnel statistics were cleared. |
| controlTxOctHw | long | tmnxL2tpPeerStatControlTxOctHw | The value of tmnxL2tpPeerStatControlTxOctHw indicates the higher 32-bits word of the value of tmnxL2tpPeerStatControlTxOct. |
| controlTxOctLw | long | tmnxL2tpPeerStatControlTxOctLw | The value of tmnxL2tpPeerStatControlTxOctLw indicates the lower 32-bits word of the value of tmnxL2tpPeerStatControlTxOct. |
| controlTxPkts | long | tmnxL2tpPeerStatControlTxPkts | The value of tmnxL2tpPeerStatControlTxOct indicates the number of control packets that were transmitted to the current tunnel endpoints in this tunnel since the last re-initialization of the local network management subsystem, or the last time the tunnel statistics were cleared. |
| draining | int | tmnxL2tpPeerStatDraining | The value of tmnxL2tpPeerStatDraining indicates if this peer is being drained. |
| errorRxPkts | long | tmnxL2tpPeerStatErrorRxPkts | The value of tmnxL2tpPeerStatErrorRxPkts indicates the number of errored packets that were received on this tunnel since the last re-initialization of the local network management subsystem, or the last time the tunnel statistics were cleared. |
| errorTxPkts | long | tmnxL2tpPeerStatErrorTxPkts | The value of tmnxL2tpPeerStatErrorTxPkts indicates the number of packet transmission errors on this tunnel since the last re-initialization of the local network management subsystem, or the last time the tunnel statistics were cleared. |

**(5 of 11)**

| 5620 SAM counter name | Type | MIB counter name | Description |
|---|---|---|---|
| lastCleared | long | tmnxL2tpPeerStatLastCleared | The value of the object tmnxL2tpPeerStatLastCleared indicates the value of sysUpTime when the contents of this conceptual row were cleared for the last time. The value zero means that the contents of this conceptual row have not yet been cleared. |
| msgAccepted | long | tmnxL2tpPeerStatMsgAccepted | The value of tmnxL2tpPeerStatMsgAccepted indicates the number of Finite State Machine (FSM) messages that were accepted from this peer since the last re-initialization of the local network management subsystem, or the last time the tunnel statistics were cleared. |
| msgDuplicateRx | long | tmnxL2tpPeerStatMsgDuplicateRx | The value of tmnxL2tpPeerStatMsgDuplicateRx indicates the number of Finite State Machine (FSM) duplicate messages that were received from this peer since the last re-initialization of the local network management subsystem, or the last time the tunnel statistics were cleared. |
| msgOutOfWndwRx | long | tmnxL2tpPeerStatMsgOutOfWndwRx | The value of tmnxL2tpPeerStatMsgOutOfWndwRx indicates the number of Finite State Machine (FSM) messages that were received out of the receive window from this peer since the last re-initialization of the local network management subsystem, or the last time the tunnel statistics were cleared. |
| sessions | long | tmnxL2tpPeerStatSessions | The value of tmnxL2tpPeerStatSessions indicates the actual number of sessions associated with this peer. |
| tunnels | long | tmnxL2tpPeerStatTunnels | The value of tmnxL2tpPeerStatTunnels indicates the actual number of tunnels associated with this peer. |
| unreachableTime | long | tmnxL2tpPeerStatUnreachableTime | The value of the object tmnxL2tpPeerStatUnreachableTime indicates the value of sysUpTime when the this peer was deemed unreachable for the last time. The value zero means that this peer has not been deemed unreachable yet. |
| **SiteStats**<br>MIB table name: TIMETRA-L2TP-MIB.tmnxL2tpStatTable<br>Monitored class: l2tp.Site | | | |
| activeSessions | long | tmnxL2tpStatActiveSessions | The value of tmnxL2tpStatActiveSessions indicates the number of sessions currently established. |
| activeTunnels | long | tmnxL2tpStatActiveTunnels | The value of tmnxL2tpStatActiveTunnels indicates the number of tunnels currently established. |

**(6 of 11)**

| 5620 SAM counter name | Type | MIB counter name | Description |
|---|---|---|---|
| attemptedSessions | long | tmnxL2tpStatTotalSessions | The value of tmnxL2tpStatTotalSessions indicates the number of session creation attempts since the last re-initialization of the local network management subsystem, or the last time the system statistics were cleared. |
| attemptedTunnels | long | tmnxL2tpStatTotalTunnels | The value of tmnxL2tpStatTotalTunnels indicates the total number of tunnel set up attempts since the last re-initialization of the local network management subsystem, or the last time the system statistics were cleared. |
| cleared | long | tmnxL2tpStatCleared | The value of the object tmnxL2tpStatCleared indicates the value of sysUpTime when the system statistics were cleared. The value zero indicates that the system statistics have not been cleared since the last re-initialization of the local network management subsystem. |
| failedSessions | long | tmnxL2tpStatFailedSessions | The value of tmnxL2tpStatFailedSessions indicates the number of sessions that failed to reach the established state since the last re-initialization of the local network management subsystem, or the last time the system statistics were cleared. |
| failedTuAuth | long | tmnxL2tpStatFailedTuAuth | The value of tmnxL2tpStatFailedTuAuth indicates the number of tunnels that failed authentication since the last re-initialization of the local network management subsystem, or the last time the system statistics were cleared. |
| failedTunnels | long | tmnxL2tpStatFailedTunnels | The value of tmnxL2tpStatFailedTunnels indicates the number of tunnels that failed to reach the established state since the last re-initialization of the local network management subsystem, or the last time the system statistics were cleared. |
| totalSessions | long | tmnxL2tpStatCurrentSessions | The value of tmnxL2tpStatCurrentSessions indicates the actual number of sessions. |
| totalTunnels | long | tmnxL2tpStatCurrentTunnels | The value of tmnxL2tpStatCurrentTunnels indicates the actual number of tunnels. |
| **TunnelStatusProtStats**<br>MIB table name: TIMETRA-L2TP-MIB.tmnxL2tpTuProtStatsTable<br>Monitored class: l2tp.TunnelStatus | | | |

**(7 of 11)**

| 5620 SAM counter name | Type | MIB counter name | Description |
|---|---|---|---|
| protInstance | long | tmnxL2tpTuProtStatsInstance | The value of the object tmnxL2tpTuProtStatsType indicates the instance identifier of the statistics contained in this conceptual row. For example: if the value of the object tmnxL2tpTuProtStatsType is equal to 'outgoingMsgType', the value of tmnxL2tpTuProtStatsInstance is a message identifier, e.g. instance '2' refers to '(SCCRP) Start-Control-Connection-Reply', and the value of tmnxL2tpTuProtStatsVal indicates the number of SCCRP messages transmitted for this tunnel. Unknown protocol messages are counted with instance zero. |
| protName | String | tmnxL2tpTuProtStatsName | The value of the object tmnxL2tpTuProtStatsType indicates the human-readable identifier of the statistics contained in this conceptual row. In the same example, the value of tmnxL2tpTuProtStatsName is '(SCCRP) Start-Control-Connection-Reply'. |
| protType | int | tmnxL2tpTuProtStatsType | The value of the object tmnxL2tpTuProtStatsType indicates the type of L2TP protocol statistics contained in this conceptual row. |
| protVal | long | tmnxL2tpTuProtStatsVal | The value of the object tmnxL2tpTuProtStatsType indicates the value of the statistics contained in this conceptual row. |
| **TunnelStatusStats**<br>MIB table name: TIMETRA-L2TP-MIB.tmnxL2tpTuStatsTable<br>Monitored class: l2tp.TunnelStatus | | | |
| activeSessions | long | tmnxL2tpTuStatsActiveSessions | The value of tmnxL2tpTuStatsActiveSessions indicates the number of sessions currently established in this tunnel. |
| controlRxOctets | UINT128 | tmnxL2tpTuStatsControlRxOctets | The value of tmnxL2tpTuStatsControlRxOctets indicates the number of control channel octets received in this tunnel since the last re-initialization of the local network management subsystem, or the last time the tunnel statistics were cleared. |
| controlRxOctetsHw | long | tmnxL2tpTuStatsControlRxOctetsHw | The value of tmnxL2tpTuStatsControlRxOctetsHw indicates the higher 32-bits word of the value of tmnxL2tpTuStatsControlRxOctets. |
| controlRxOctetsLw | long | tmnxL2tpTuStatsControlRxOctetsLw | The value of tmnxL2tpTuStatsControlRxOctetsLw indicates the lower 32-bits word of the value of tmnxL2tpTuStatsControlRxOctets. |

**(8 of 11)**

| 5620 SAM counter name | Type | MIB counter name | Description |
|---|---|---|---|
| controlRxPkts | long | tmnxL2tpTuStatsControlRxPkts | The value of tmnxL2tpTuStatsControlRxPkts indicates the number of control packets received by this tunnel since the last re-initialization of the local network management subsystem, or the last time the tunnel statistics were cleared. |
| controlTxOctets | UINT128 | tmnxL2tpTuStatsControlTxOctets | The value of tmnxL2tpTuStatsControlTxOctets indicates the number of control channel octets that were transmitted to the current tunnel endpoints in this tunnel since the last re-initialization of the local network management subsystem, or the last time the tunnel statistics were cleared. |
| controlTxOctetsHw | long | tmnxL2tpTuStatsControlTxOctetsHw | The value of tmnxL2tpTuStatsControlTxOctetsHw indicates the higher 32-bits word of the value of tmnxL2tpTuStatsControlTxOctets. |
| controlTxOctetsLw | long | tmnxL2tpTuStatsControlTxOctetsLw | The value of tmnxL2tpTuStatsControlTxOctetsLw indicates the lower 32-bits word of the value of tmnxL2tpTuStatsControlTxOctets. |
| controlTxPkts | long | tmnxL2tpTuStatsControlTxPkts | The value of tmnxL2tpTuStatsControlTxOctets indicates the number of control packets that were transmitted to the current tunnel endpoints in this tunnel since the last re-initialization of the local network management subsystem, or the last time the tunnel statistics were cleared. |
| errorRxPkts | long | tmnxL2tpTuStatsErrorRxPkts | The value of tmnxL2tpTuStatsErrorRxPkts indicates the number of errored packets that were received on this tunnel since the last re-initialization of the local network management subsystem, or the last time the tunnel statistics were cleared. |
| errorTxPkts | long | tmnxL2tpTuStatsErrorTxPkts | The value of tmnxL2tpTuStatsErrorTxPkts indicates the number of packet transmission errors on this tunnel since the last re-initialization of the local network management subsystem, or the last time the tunnel statistics were cleared. |
| failedSessions | long | tmnxL2tpTuStatsFailedSessions | The value of tmnxL2tpTuStatsFailedSessions indicates the number of sessions in this tunnel that failed to reach the established state since the last re-initialization of the local network management subsystem, or the last time the tunnel statistics were cleared. |

**(9 of 11)**

| 5620 SAM counter name | Type | MIB counter name | Description |
|---|---|---|---|
| fsmMsgAccepted | long | tmnxL2tpTuStatsFsmMsgAccepted | The value of tmnxL2tpTuStatsFsmMsgAccepted indicates the number of Finite State Machine (FSM) messages that were accepted on this tunnel since the last re-initialization of the local network management subsystem, or the last time the tunnel statistics were cleared. |
| fsmMsgDuplicateRx | long | tmnxL2tpTuStatsFsmMsgDuplicateRx | The value of tmnxL2tpTuStatsFsmMsgDuplicateRx indicates the number of Finite State Machine (FSM) duplicate messages that were received on this tunnel since the last re-initialization of the local network management subsystem, or the last time the tunnel statistics were cleared. |
| fsmMsgOutOfWndwRx | long | tmnxL2tpTuStatsFsmMsgOutOfWndwRx | The value of tmnxL2tpTuStatsFsmMsgOutOfWndwRx indicates the number of Finite State Machine (FSM) messages that were received out of the receive window on this tunnel since the last re-initialization of the local network management subsystem, or the last time the tunnel statistics were cleared. |
| lastCleared | long | tmnxL2tpTuStatsLastCleared | The value of the object tmnxL2tpTuStatsLastCleared indicates the value of sysUpTime when the contents of this conceptual row were cleared for the last time. The value zero means that the contents of this conceptual row have not yet been cleared. |
| qLengthAckCur | long | tmnxL2tpTuStatsQLengthAckCur | The value of tmnxL2tpTuStatsErrorRxPkts indicates the the current length of the acknowledged message queue on this tunnel. |
| qLengthAckMax | long | tmnxL2tpTuStatsQLengthAckMax | The value of tmnxL2tpTuStatsErrorRxPkts indicates the the maximum length of the acknowledged message queue on this tunnel since the last re-initialization of the local network management subsystem, or the last time the tunnel statistics were cleared. |
| qLengthUnsentCur | long | tmnxL2tpTuStatsQLengthUnsentCur | The value of tmnxL2tpTuStatsErrorRxPkts indicates the the current length of the unsent message queue on this tunnel. |
| qLengthUnsentMax | long | tmnxL2tpTuStatsQLengthUnsentMax | The value of tmnxL2tpTuStatsQLengthUnsentMax indicates the the maximum length of the unsent message queue on this tunnel since the last re-initialization of the local network management subsystem, or the last time the tunnel statistics were cleared. |

**(10 of 11)**

| 5620 SAM counter name | Type | MIB counter name | Description |
|---|---|---|---|
| totalSessions | long | tmnxL2tpTuStatsTotalSessions | The value of tmnxL2tpTuStatsTotalSessions indicates the number of session creation attempts in this tunnel since the last re-initialization of the local network management subsystem, or the last time the tunnel statistics were cleared. |
| windowSizeCur | long | tmnxL2tpTuStatsWindowSizeCur | The value of tmnxL2tpTuStatsErrorRxPkts indicates the the current size of the receive window on this tunnel. |

**(11 of 11)**

**Table A-23 lag statistics**

| 5620 SAM counter name | Type | MIB counter name | Description |
|---|---|---|---|
| **LagStats**<br>MIB table name: TIMETRA-LAG-MIB.tLagOperationTable<br>Monitored class: lag.Interface | | | |
| portThresholdFalling | long | tLagPortThresholdFalling | counts the number of linkDown or dynamicCost events for the Link Aggregation Group caused by the number of physical ports being less than or equal to tLagPortThreshold value. |
| portThresholdRising | long | tLagPortThresholdRising | counts the number of linkUp or dynamicCost events for the Link Aggregation Group caused by the number of physical ports being greater than tLagPortThreshold value. |
| **MultiChassisLagMemberStats**<br>MIB table name: TIMETRA-MC-REDUNDANCY-MIB.tmnxMcLagLagStatsTable<br>Monitored classes:<br>• lag.MultiChassisLagMember<br>• multichassis.MultiChassisLagMember | | | |
| configPacketsReceived | long | tmnxMcLagLagStatsPktsRxConfig | The value of tmnxMcLagLagStatsPktsRxConfig indicates how many MC-Lag control packets of type lag config were received on this system from the peer for this lag. |
| configPacketsTransmitted | long | tmnxMcLagLagStatsPktsTxConfig | The value of tmnxMcLagLagStatsPktsTxConfig indicates how many MC-Lag control packets of type lag config were sent on this system to the peer for this lag. |
| failedPacketsTransmitted | long | tmnxMcLagLagStatsPktsTxFailed | The value of tmnxMcLagLagStatsPktsTxFailed indicates how many MC-Lag control packets failed to be transmitted on this system to the peer for this lag. |
| statePacketsReceived | long | tmnxMcLagLagStatsPktsRxState | The value of tmnxMcLagLagStatsPktsRxState indicates how many MC-Lag control packets of type lag state were received on this system from the peer for this lag. |

**(1 of 2)**

| 5620 SAM counter name | Type | MIB counter name | Description |
|---|---|---|---|
| statePacketsTransmitted | long | tmnxMcLagLagStatsPktsTxState | The value of tmnxMcLagLagStatsPktsTxState indicates how many MC-Lag control packets of type lag state were sent on this system to the peer for this lag. |

**(2 of 2)**

### Table A-24 ldp statistics

| 5620 SAM counter name | Type | MIB counter name | Description |
|---|---|---|---|
| **InterfaceStats**<br>MIB table name: TIMETRA-LDP-MIB.vRtrLdpIfStatsTable<br>Monitored class: ldp.Interface | | | |
| existingAdjacencies | long | vRtrLdpIfExistingAdjacencies | The value of vRtrLdpIfExistingAdjacencies gives a count of the total active adjacencies on this LDP interface or with this targeted peer. |
| **LdpEgressStats**<br>MIB table name: TIMETRA-LDP-MIB.vRtrLdpEgrStatisticsTable<br>Monitored class: ldp.AccountingFecPrefix | | | |
| ldpInProfileOctetsFc0 | UINT128 | vRtrLdpInProfileOctetsFc0 | The value of vRtrLdpInProfileOctetsFc0 indicates the number of in profile octets received for Forwarding Class 0. |
| ldpInProfileOctetsFc1 | UINT128 | vRtrLdpInProfileOctetsFc1 | The value of vRtrLdpInProfileOctetsFc1 indicates the number of in profile octets received for Forwarding Class 1. |
| ldpInProfileOctetsFc2 | UINT128 | vRtrLdpInProfileOctetsFc2 | The value of vRtrLdpInProfileOctetsFc2 indicates the number of in profile octets received for Forwarding Class 2. |
| ldpInProfileOctetsFc3 | UINT128 | vRtrLdpInProfileOctetsFc3 | The value of vRtrLdpInProfileOctetsFc3 indicates the number of in profile octets received for Forwarding Class 3. |
| ldpInProfileOctetsFc4 | UINT128 | vRtrLdpInProfileOctetsFc4 | The value of vRtrLdpInProfileOctetsFc4 indicates the number of in profile octets received for Forwarding Class 4. |
| ldpInProfileOctetsFc5 | UINT128 | vRtrLdpInProfileOctetsFc5 | The value of vRtrLdpInProfileOctetsFc5 indicates the number of in profile octets received for Forwarding Class 5. |
| ldpInProfileOctetsFc6 | UINT128 | vRtrLdpInProfileOctetsFc6 | The value of vRtrLdpInProfileOctetsFc6 indicates the number of in profile octets received for Forwarding Class 6. |
| ldpInProfileOctetsFc7 | UINT128 | vRtrLdpInProfileOctetsFc7 | The value of vRtrLdpInProfileOctetsFc7 indicates the number of in profile octets received for Forwarding Class 7. |
| ldpInProfilePktsFc0 | UINT128 | vRtrLdpInProfilePktsFc0 | The value of vRtrLdpInProfilePktsFc0 indicates the number of in profile packets received for Forwarding Class 0. |
| ldpInProfilePktsFc1 | UINT128 | vRtrLdpInProfilePktsFc1 | The value of vRtrLdpInProfilePktsFc1 indicates the number of in profile packets received for Forwarding Class 1. |

**(1 of 7)**

| 5620 SAM counter name | Type | MIB counter name | Description |
|---|---|---|---|
| ldpInProfilePktsFc2 | UINT128 | vRtrLdpInProfilePktsFc2 | The value of vRtrLdpInProfilePktsFc2 indicates the number of in profile packets received for Forwarding Class 2. |
| ldpInProfilePktsFc3 | UINT128 | vRtrLdpInProfilePktsFc3 | The value of vRtrLdpInProfilePktsFc3 indicates the number of in profile packets received for Forwarding Class 3. |
| ldpInProfilePktsFc4 | UINT128 | vRtrLdpInProfilePktsFc4 | The value of vRtrLdpInProfilePktsFc4 indicates the number of in profile packets received for Forwarding Class 4. |
| ldpInProfilePktsFc5 | UINT128 | vRtrLdpInProfilePktsFc5 | The value of vRtrLdpInProfilePktsFc5 indicates the number of in profile packets received for Forwarding Class 5. |
| ldpInProfilePktsFc6 | UINT128 | vRtrLdpInProfilePktsFc6 | The value of vRtrLdpInProfilePktsFc6 indicates the number of in profile packets received for Forwarding Class 6. |
| ldpInProfilePktsFc7 | UINT128 | vRtrLdpInProfilePktsFc7 | The value of vRtrLdpInProfilePktsFc7 indicates the number of in profile packets received for Forwarding Class 7. |
| ldpOutOfProfOctetsFc0 | UINT128 | vRtrLdpOutOfProfOctetsFc0 | The value of vRtrLdpOutOfProfOctetsFc0 indicates the number of out of profile octets received for Forwarding Class 0. |
| ldpOutOfProfOctetsFc1 | UINT128 | vRtrLdpOutOfProfOctetsFc1 | The value of vRtrLdpOutOfProfOctetsFc1 indicates the number of out of profile octets received for Forwarding Class 1. |
| ldpOutOfProfOctetsFc2 | UINT128 | vRtrLdpOutOfProfOctetsFc2 | The value of vRtrLdpOutOfProfOctetsFc2 indicates the number of out of profile octets received for Forwarding Class 2. |
| ldpOutOfProfOctetsFc3 | UINT128 | vRtrLdpOutOfProfOctetsFc3 | The value of vRtrLdpOutOfProfOctetsFc3 indicates the number of out of profile octets received for Forwarding Class 3. |
| ldpOutOfProfOctetsFc4 | UINT128 | vRtrLdpOutOfProfOctetsFc4 | The value of vRtrLdpOutOfProfOctetsFc4 indicates the number of out of profile octets received for Forwarding Class 4. |
| ldpOutOfProfOctetsFc5 | UINT128 | vRtrLdpOutOfProfOctetsFc5 | The value of vRtrLdpOutOfProfOctetsFc5 indicates the number of out of profile octets received for Forwarding Class 5. |
| ldpOutOfProfOctetsFc6 | UINT128 | vRtrLdpOutOfProfOctetsFc6 | The value of vRtrLdpOutOfProfOctetsFc6 indicates the number of out of profile octets received for Forwarding Class 6. |
| ldpOutOfProfOctetsFc7 | UINT128 | vRtrLdpOutOfProfOctetsFc7 | The value of vRtrLdpOutOfProfOctetsFc7 indicates the number of out of profile octets received for Forwarding Class 7. |
| ldpOutOfProfPktsFc0 | UINT128 | vRtrLdpOutOfProfPktsFc0 | The value of vRtrLdpOutOfProfPktsFc0 indicates the number of out of profile packets received for Forwarding Class 0. |
| ldpOutOfProfPktsFc1 | UINT128 | vRtrLdpOutOfProfPktsFc1 | The value of vRtrLdpOutOfProfPktsFc1 indicates the number of out of profile packets received for Forwarding Class 1. |
| ldpOutOfProfPktsFc2 | UINT128 | vRtrLdpOutOfProfPktsFc2 | The value of vRtrLdpOutOfProfPktsFc2 indicates the number of out of profile packets received for Forwarding Class 2. |

**(2 of 7)**

| 5620 SAM counter name | Type | MIB counter name | Description |
|---|---|---|---|
| ldpOutOfProfPktsFc3 | UINT128 | vRtrLdpOutOfProfPktsFc3 | The value of vRtrLdpOutOfProfPktsFc3 indicates the number of out of profile packets received for Forwarding Class 3. |
| ldpOutOfProfPktsFc4 | UINT128 | vRtrLdpOutOfProfPktsFc4 | The value of vRtrLdpOutOfProfPktsFc4 indicates the number of out of profile packets received for Forwarding Class 4. |
| ldpOutOfProfPktsFc5 | UINT128 | vRtrLdpOutOfProfPktsFc5 | The value of vRtrLdpOutOfProfPktsFc5 indicates the number of out of profile packets received for Forwarding Class 5. |
| ldpOutOfProfPktsFc6 | UINT128 | vRtrLdpOutOfProfPktsFc6 | The value of vRtrLdpOutOfProfPktsFc6 indicates the number of out of profile packets received for Forwarding Class 6. |
| ldpOutOfProfPktsFc7 | UINT128 | vRtrLdpOutOfProfPktsFc7 | The value of vRtrLdpOutOfProfPktsFc7 indicates the number of out of profile packets received for Forwarding Class 7. |
| **SessionStats**<br>MIB table name: TIMETRA-LDP-MIB.vRtrLdpSessionStatsTable<br>Monitored class: ldp.Session | | | |
| addressMessagesReceived | long | vRtrLdpSessStatsAddrIn | The value of vRtrLdpSessStatsAddrIn counts the number of Address Messages that have been received during this session. |
| addressMessagesSent | long | vRtrLdpSessStatsAddrOut | The value of vRtrLdpSessStatsAddrOut counts the number of Address Messages that have been sent during this session. |
| addressWithdrawMessagesReceived | long | vRtrLdpSessStatsAddrWithdrawIn | The value of vRtrLdpSessStatsAddrWithdrawIn counts the number of Address Withdraw Messages that have been received during this session. |
| addressWithdrawMessagesSent | long | vRtrLdpSessStatsAddrWithdrawOut | The value of vRtrLdpSessStatsAddrWithdrawOut counts the number of Address Withdraw Messages that have been sent during this session. |
| fecReceived | long | vRtrLdpSessStatsFECRecv | The value of vRtrLdpSessStatsFECRecv counts the number of FECs received for this session. |
| fecSent | long | vRtrLdpSessStatsFECSent | The value of vRtrLdpSessStatsFECSent counts the number of FECs sent for this session. |
| helloMessagesReceived | long | vRtrLdpSessStatsHelloIn | The value of vRtrLdpSessStatsHelloIn counts the number of Hello Messages that have been received during this session. |
| helloMessagesSent | long | vRtrLdpSessStatsHelloOut | The value of vRtrLdpSessStatsHelloOut counts the number of Hello Messages that have been sent during this session. |
| initMessagesReceived | long | vRtrLdpSessStatsInitIn | The value of vRtrLdpSessStatsInitIn counts the number of Init Messages that have been received during this session. |
| initMessagesSent | long | vRtrLdpSessStatsInitOut | The value of vRtrLdpSessStatsInitOut counts the number of Init Messages that have been sent during this session. |

**(3 of 7)**

| 5620 SAM counter name | Type | MIB counter name | Description |
|---|---|---|---|
| keepAliveMessagesReceived | long | vRtrLdpSessStatsKeepaliveIn | The value of vRtrLdpSessStatsKeepaliveIn counts the number of Keepalive Messages that have been received during this session. |
| keepAliveMessagesSent | long | vRtrLdpSessStatsKeepaliveOut | The value of vRtrLdpSessStatsKeepaliveOut counts the number of Keepalive Messages that have been sent during this session. |
| labelAbortsReceived | long | vRtrLdpSessStatsLabelAbortIn | The value of vRtrLdpSessStatsLabelAbortIn counts the number of Label Abort Messages that have been received during this session. |
| labelAbortsSent | long | vRtrLdpSessStatsLabelAbortOut | The value of vRtrLdpSessStatsLabelAbortOut counts the number of Label Abort Messages that have been sent during this session. |
| labelMappingsReceived | long | vRtrLdpSessStatsLabelMappingIn | The value of vRtrLdpSessStatsLabelMappingIn counts the number of Label Mapping Messages that have been received during this session. |
| labelMappingsSent | long | vRtrLdpSessStatsLabelMappingOut | The value of vRtrLdpSessStatsLabelMappingOut counts the number of Label Mapping Messages that have been sent during this session. |
| labelReleasesReceived | long | vRtrLdpSessStatsLabelReleaseIn | The value of vRtrLdpSessStatsLabelReleaseIn counts the number of Label Release Messages that have been received during this session. |
| labelReleasesSent | long | vRtrLdpSessStatsLabelReleaseOut | The value of vRtrLdpSessStatsLabelReleaseOut counts the number of Label Release Messages that have been sent during this session. |
| labelRequestsReceived | long | vRtrLdpSessStatsLabelRequestIn | The value of vRtrLdpSessStatsLabelRequestIn counts the number of Label Request Messages that have been received during this session. |
| labelRequestsSent | long | vRtrLdpSessStatsLabelRequestOut | The value of vRtrLdpSessStatsLabelRequestOut counts the number of Label Request Messages that have been sent during this session. |
| labelWithdrawsReceived | long | vRtrLdpSessStatsLabelWithdrawIn | The value of vRtrLdpSessStatsLabelWithdrawIn counts the number of Label Withdraw Messages that have been received during this session. |
| labelWithdrawsSent | long | vRtrLdpSessStatsLabelWithdrawOut | The value of vRtrLdpSessStatsLabelWithdrawOut counts the number of Label Withdraw Messages that have been sent during this session. |
| linkAdjacencies | long | vRtrLdpSessStatsLinkAdj | The value of vRtrLdpSessStatsLinkAdj specifies the number of link adjacencies for this session. |

**(4 of 7)**

| 5620 SAM counter name | Type | MIB counter name | Description |
|---|---|---|---|
| notificationMessagesReceived | long | vRtrLdpSessStatsNotificationIn | The value of vRtrLdpSessStatsNotificationIn counts the number of Notification Messages that have been received during this session. |
| notificationMessagesSent | long | vRtrLdpSessStatsNotificationOut | The value of vRtrLdpSessStatsNotificationOut counts the number of Notification Messages that have been sent during this session. |
| targetedAdjacencies | long | vRtrLdpSessStatsTargAdj | The value of vRtrLdpSessStatsTargAdj specifies the number of targeted adjacencies for this session. |
| **SiteStats**<br>MIB table name: TIMETRA-LDP-MIB.vRtrLdpStatsTable<br>Monitored class: ldp.Site | | | |
| activeAdjacencies | long | vRtrLdpStatsActiveAdjacencies | The value of vRtrLdpStatsActiveAdjacencies specifies the number of active adjacencies (i.e. established sessions) associated with the LDP instance. |
| activeInterfaces | long | vRtrLdpStatsActiveInterfaces | The value of vRtrLdpStatsActiveInterfaces specifies the number of active (i.e. operationally up) interfaces associated with the LDP instance. |
| activeSessions | long | vRtrLdpStatsActiveSessions | The value of vRtrLdpStatsActiveSessions specifies the number of active sessions (i.e. session in some form of creation) associated with the LDP instance. |
| activeTargetedSessions | long | vRtrLdpStatsActiveTargSessions | The value of vRtrLdpStatsActiveTargSessions specifies the number of active (i.e. operationally up) targeted sessions associated with the LDP instance. |
| addressFECsReceived | long | vRtrLdpStatsAddrFECRecv | The value of vRtrLdpStatsAddrFECRecv specifies the number of Address FECs received by the LDP instance from its neighbors. |
| addressFECsSent | long | vRtrLdpStatsAddrFECSent | The value of vRtrLdpStatsAddrFECSent specifies the number of Address FECs sent by the LDP instance to its neighbors. |
| attemptedSessions | long | vRtrLdpStatsAttemptedSessions | The value of vRtrLdpStatsAttemptedSessions specifies the total number of attempted sessions for this LDP instance. |
| badLdpIdentifierErrors | long | vRtrLdpStatsBadLdpIdentifierErrors | The value of vRtrLdpStatsBadLdpIdentifierErrors gives the number of Bad LDP Identifier Fatal Errors detected for sessions associated with this LDP instance. REFERENCE LDP Specification, Section 3.5.1.2. |

**(5 of 7)**

| 5620 SAM counter name | Type | MIB counter name | Description |
|---|---|---|---|
| badMessageLengthErrors | long | vRtrLdpStatsBadMessageLengthErrors | The value of vRtrLdpStatsBadMessageLengthErrors gives the number of Bad Message Length Fatal Errors detected for sessions associated with this LDP instance. REFERENCE LDP Specification, Section 3.5.1.2. |
| badPduLengthErrors | long | vRtrLdpStatsBadPduLengthErrors | The value of vRtrLdpStatsBadPduLengthErrors gives the number of Bad Pdu Length Fatal Errors detected for sessions associated with this LDP instance. REFERENCE LDP Specification, Section 3.5.1.2. |
| badTlvLengthErrors | long | vRtrLdpStatsBadTlvLengthErrors | The value of vRtrLdpStatsBadTlvLengthErrors gives the number of Bad TLV Length Fatal Errors detected for sessions associated with this LDP instance. REFERENCE LDP Specification, Section 3.5.1.2. |
| inactiveInterfaces | long | vRtrLdpStatsInactiveInterfaces | The value of vRtrLdpStatsInactiveInterfaces specifies the number of inactive (i.e. operationally down) interfaces associated with the LDP instance. |
| inactiveTargetedSessions | long | vRtrLdpStatsInactiveTargSessions | The value of vRtrLdpStatsInactiveTargSessions specifies the number of inactive (i.e. operationally down) targeted sessions associated with the LDP instance. |
| keepAliveExpiredErrors | long | vRtrLdpStatsKeepAliveExpiredErrors | The value of vRtrLdpStatsKeepAliveExpiredErrors gives the number of Session Keep Alive Timer Expired Errors detected for sessions associated with this LDP instance. REFERENCE LDP Specification, Section 3.5.1.2. |
| malformedTlvValueErrors | long | vRtrLdpStatsMalformedTlvValueErrors | The value of vRtrLdpStatsMalformedTlvValueErrors gives the number of Malformed TLV Value Fatal Errors detected for sessions associated with this LDP instance. REFERENCE LDP Specification, Section 3.5.1.2. |
| operDownEvents | long | vRtrLdpStatsOperDownEvents | The value of vRtrLdpStatsOperDownEvents specifies the number of times the LDP instance has gone operationally down since the instance was created. |
| serviceFECsReceived | long | vRtrLdpStatsSvcFECRecv | The value of vRtrLdpStatsSvcFECRecv specifies the number of Service FECs received by the LDP instance from its neighbors. |
| serviceFECsSent | long | vRtrLdpStatsSvcFECSent | The value of vRtrLdpStatsSvcFECSent specifies the number of Service FECs sent by the LDP instance to its neighbors. |

**(6 of 7)**

| 5620 SAM counter name | Type | MIB counter name | Description |
|---|---|---|---|
| sessionRejectedAdvertisementModeErrors | long | vRtrLdpStatsSessRejAdvErrors | The value of vRtrLdpStatsSessRejAdvErrors gives the total number of Session Rejected/Parameters Advertisement Mode Error Notification Messages sent or received by this LDP instance. |
| sessionRejectedLabelRangeErrors | long | vRtrLdpStatsSessRejLabelRangeErrors | The value of vRtrLdpStatsSessRejLabelRangeErrors gives the total number of Session Rejected/Parameters Label Range Error Notification Messages sent or received by this LDP instance. |
| sessionRejectedMaxPduLengthErrors | long | vRtrLdpStatsSessRejMaxPduErrors | The value of vRtrLdpStatsSessRejMaxPduErrors gives the total number of Session Rejected/Parameters Max Pdu Length Error Notification Messages sent or received by this LDP instance. |
| sessionRejectedNoHelloErrors | long | vRtrLdpStatsSessRejNoHelloErrors | The value of vRtrLdpStatsSessRejNoHelloErrors gives the total number of Session Rejected/No Hello Error Notification Messages sent or received by this LDP instance. |
| shutdownNotificationsReceived | long | vRtrLdpStatsShutdownNotifRecv | The value of vRtrLdpStatsShutdownNotifRecv gives the number of Shutdown Notifications received related to sessions associated with this LDP instance. |
| shutdownNotificationsSent | long | vRtrLdpStatsShutdownNotifSent | The value of vRtrLdpStatsShutdownNotifSent gives the number of Shutdown Notifications sent related to sessions associated with this LDP instance. |
| **SiteStatsExtension**<br>MIB table name: TIMETRA-LDP-MIB.vRtrLdpStatsTable<br>Monitored class: ldp.Site | | | |
| p2mpFecReceived | long | vRtrLdpStatsP2MPFECRecv | The value of vRtrLdpStatsP2MPFECRecv specifies the number of P2MP FECs received by the ldp instance from its neighbors. |
| p2mpFecSent | long | vRtrLdpStatsP2MPFECSent | The value of vRtrLdpStatsP2MPFECSent specifies the number of P2MP FECs sent by the ldp instance to its neighbors. |
| **TargetedPeerStats**<br>MIB table name: TIMETRA-LDP-MIB.vRtrLdpIfStatsTable<br>Monitored class: ldp.TargetedPeer | | | |
| existingAdjacencies | long | vRtrLdpIfExistingAdjacencies | The value of vRtrLdpIfExistingAdjacencies gives a count of the total active adjacencies on this LDP interface or with this targeted peer. |

**(7 of 7)**

**Table A-25 lldp statistics**

| 5620 SAM counter name | Type | MIB counter name | Description |
|---|---|---|---|
| **LLDPRxPortStats**<br>MIB table name: TIMETRA-LLDP-MIB.tmnxLldpStatsRxPortTable<br>Monitored class: lldp.LLDPPortConfiguration | | | |
| lldpStatsRxPortAgeouts | long | tmnxLldpStatsRxPortAgeouts | The counter that represents the number of age-outs that occurred on a given port. An age-out is the number of times the complete set of information advertised by a particular MSAP has been deleted from tables contained in tmnxLldpRemoteSystemsData and lldpExtensions objects because the information timeliness interval has expired. This counter is similar to lldpStatsRemTablesAgeouts, except that the counter is on a per port basis. This enables NMS to poll tables associated with the tmnxLldpRemoteSystemsData objects and all LLDP extension objects associated with remote systems on the indicated port only. This counter should be set to zero during agent initialization and its value should not be saved in non-volatile storage. When a port's admin status changes from 'disabled' to 'rxOnly', 'txOnly' or 'txAndRx', the counter associated with the same port should reset to 0. The agent should also flush all remote system information associated with the same port. This counter should be incremented only once when the complete set of information is invalidated (aged out) from all related tables on a particular port. Partial ageing is not allowed, and thus, should not change the value of this counter. REFERENCE IEEE Std 802.1AB-200X 10.5.2. |
| lldpStatsRxPortFrameDiscard | long | tmnxLldpStatsRxPortFrameDiscard | The number of LLDP frames received by this LLDP agent on the indicated port, and then discarded for any reason. This counter can provide an indication that LLDP header formating problems may exist with the local LLDP agent in the sending system or that LLDPDU validation problems may exist with the local LLDP agent in the receiving system. REFERENCE IEEE Std 802.1AB-200X 10.5.2. |
| lldpStatsRxPortFrameErrs | long | tmnxLldpStatsRxPortFrameErrs | The number of invalid LLDP frames received by this LLDP agent on the indicated port, while this LLDP agent is enabled. REFERENCE IEEE Std 802.1AB-200X 10.5.2. |
| lldpStatsRxPortFrames | long | tmnxLldpStatsRxPortFrames | The number of valid LLDP frames received by this LLDP agent on the indicated port, while this LLDP agent is enabled. REFERENCE IEEE Std 802.1AB-200X 10.5.2. |

**(1 of 2)**

| 5620 SAM counter name | Type | MIB counter name | Description |
|---|---|---|---|
| lldpStatsRxPortTLVDiscard | long | tmnxLldpStatsRxPortTLV Discard | The number of LLDP TLVs discarded for any reason by this LLDP agent on the indicated port. REFERENCE IEEE Std 802.1AB-200X 10.5.2. |
| lldpStatsRxPortTLVUnknown | long | tmnxLldpStatsRxPortTLV Unknown | The number of LLDP TLVs received on the given port that are not recognized by this LLDP agent on the indicated port. An unrecognized TLV is referred to as the TLV whose type value is in the range of reserved TLV types (000 1001 - 111 1110) in Table 9.1 of IEEE Std 802.1AB-2004. An unrecognized TLV may be a basic management TLV from a later LLDP version. REFERENCE IEEE Std 802.1AB-200X 10.5.2. |
| **LLDPTxPortStats**<br>MIB table name: TIMETRA-LLDP-MIB.tmnxLldpStatsTxPortTable<br>Monitored class: lldp.LLDPPortConfiguration | | | |
| lldpStatsTxLLDPDULengthErrs | long | tmnxLldpStatsTxLLDPDUL engthErrs | The number of LLDPD Length Errors recorded for the Port. REFERENCE IEEE Std 802.1AB-200X 10.2.7.2. |
| lldpStatsTxPortFrames | long | tmnxLldpStatsTxPortFra mes | The number of LLDP frames transmitted by this LLDP agent on the indicated port. REFERENCE IEEE Std 802.1AB-200X 10.5.2. |

**(2 of 2)**

### Table A-26 lte statistics

| 5620 SAM counter name | Type | MIB counter name | Description |
|---|---|---|---|
| **GxPeerStats**<br>MIB table name: TIMETRA-MOBILE-PDN-MIB.tmnxMobPdnGxStatTable<br>Monitored class: lte.GxPeer | | | |
| bearerBindingAndEventReportingF unctionTransmitted | long | tmnxMobPdnGxStatBberfs | The value of tmnxMobPdnGxStatBberfs indicates the number of Bearer Binding and Event Reporting Function (BBERF) procedures transmitted by this peer. |
| capabilitiesExchangeAnswersRecei ved | long | tmnxMobPdnGxStatRxCea | The value of tmnxMobPdnGxStatRxCea indicates the number of Capabilities Exchange Answer (CEA) messages received from this peer. |
| capabilitiesExchangeRequestsTran smitted | long | tmnxMobPdnGxStatTxCer | The value of tmnxMobPdnGxStatTxCer indicates the number of Capabilities Exchange Request (CER) messages transmitted to this peer. |
| cardSlotNumber | long | tmnxCardSlotNum | — |
| chassisIndex | long | tmnxChassisIndex | — |
| connectionAttempts | long | tmnxMobPdnGxStatConnA ttempts | The value of tmnxMobPdnGxStatConnAttempts indicates the number of connections attempted to this peer. |

**(1 of 15)**

| 5620 SAM counter name | Type | MIB counter name | Description |
|---|---|---|---|
| connectionFailures | long | tmnxMobPdnGxStatConnFailures | The value of tmnxMobPdnGxStatConnFailures indicates the number of failed connections with this peer. |
| creditControlAnswerInitialMalformedPacketsReceived | long | tmnxMobPdnGxStatRxCcaIMalformPkt | The value of tmnxMobPdnGxStatRxCcaIMalformPkt indicates the number of Credit Control Answer (CCA) Initial malformed packets received from this peer. |
| creditControlAnswerInitialMissingMandatoryInformationElementPacketsReceived | long | tmnxMobPdnGxStatRxCcaIMissIePkts | The value of tmnxMobPdnGxStatRxCcaIMissIePkts indicates the number of Credit Control Answer (CCA) Initial missing mandatory Information Element (IE) packets received from this peer. |
| creditControlAnswerInitialUnknownPacketsReceived | long | tmnxMobPdnGxStatRxCcaIUnknownPkt | The value of tmnxMobPdnGxStatRxCcaIUnknownPkt indicates the number of Credit Control Answer (CCA) Initial unknown packets received from this peer. |
| creditControlAnswerInitialUnknownSessionPacketsReceived | long | tmnxMobPdnGxStatRxCcaIUnkSession | The value of tmnxMobPdnGxStatRxCcaIUnkSession indicates the number of Credit Control Answer (CCA) Initial unknown session packets received from this peer. |
| creditControlAnswerTerminationMalformedPacketsReceived | long | tmnxMobPdnGxStatRxCcaTMalformPkt | The value of tmnxMobPdnGxStatRxCcaTMalformPkt indicates the number of Credit Control Answer (CCA) Termination malformed packets received from this peer. |
| creditControlAnswerTerminationMissingMandatoryInformationElementPacketsReceived | long | tmnxMobPdnGxStatRxCcaTMissIePkts | The value of tmnxMobPdnGxStatRxCcaTMissIePkts indicates the number of Credit Control Answer (CCA) Termination missing mandatory Information Element (IE) packets received from this peer. |
| creditControlAnswerTerminationUnknownPacketsReceived | long | tmnxMobPdnGxStatRxCcaTUnknownPkt | The value of tmnxMobPdnGxStatRxCcaTUnknownPkt indicates the number of Credit Control Answer (CCA) Termination unknown packets received from this peer. |
| creditControlAnswerTerminationUnknownSessionPacketsReceived | long | tmnxMobPdnGxStatRxCcaTUnkSession | The value of tmnxMobPdnGxStatRxCcaTUnkSession indicates the number of Credit Control Answer (CCA) Termination unknown session packets received from this peer. |
| creditControlAnswerUpdateMalformedPacketsReceived | long | tmnxMobPdnGxStatRxCcaUMalformPkt | The value of tmnxMobPdnGxStatRxCcaUMalformPkt indicates the number of Credit Control Answer (CCA) Update malformed packets received from this peer. |
| creditControlAnswerUpdateMissingMandatoryInformationElementPacketsReceived | long | tmnxMobPdnGxStatRxCcaUMissIePkts | The value of tmnxMobPdnGxStatRxCcaUMissIePkts indicates the number of Credit Control Answer (CCA) Update missing mandatory Information Element (IE) packets received from this peer. |

**(2 of 15)**

| 5620 SAM counter name | Type | MIB counter name | Description |
|---|---|---|---|
| creditControlAnswerUpdateUnknownPacketsReceived | long | tmnxMobPdnGxStatRxCcaUUnknownPkt | The value of tmnxMobPdnGxStatRxCcaUUnknownPkt indicates the number of Credit Control Answer (CCA) Update unknown packets received from this peer. |
| creditControlAnswerUpdateUnknownSessionPacketsReceived | long | tmnxMobPdnGxStatRxCcaUUnkSession | The value of tmnxMobPdnGxStatRxCcaUUnkSession indicates the number of Credit Control Answer (CCA) Update unknown session packets received from this peer. |
| creditControlRequestInitialAnswersReceived | long | tmnxMobPdnGxStatRxCcaInitial | The value of tmnxMobPdnGxStatRxCcaInitial indicates the number of Credit Control Answer (CCA) Initial messages received from this peer. |
| creditControlRequestInitialFailuresReceived | long | tmnxMobPdnGxStatCcrInitFails | The value of tmnxMobPdnGxStatCcrInitFails indicates the number of Credit Control Request (CCR) Initial message failures. |
| creditControlRequestInitialRequestsTransmitted | long | tmnxMobPdnGxStatTxCcrInitial | The value of tmnxMobPdnGxStatTxCcrInitial indicates the number of Credit Control Request (CCR) Initial messages transmitted to this peer. |
| creditControlRequestTerminationFailuresReceived | long | tmnxMobPdnGxStatCcrTermFails | The value of tmnxMobPdnGxStatCcrTermFails indicates the number of Credit Control Request (CCR) Termination message failures. |
| creditControlRequestTerminationRequestsReceived | long | tmnxMobPdnGxStatRxCcaTerminate | The value of tmnxMobPdnGxStatRxCcaTerminate indicates the number of Credit Control Answer (CCA) Termination messages received from this peer. |
| creditControlRequestTerminationRequestsTransmitted | long | tmnxMobPdnGxStatTxCcrTerminate | The value of tmnxMobPdnGxStatTxCcrTerminate indicates the number of Credit Control Request (CCR) Termination messages transmitted to this peer. |
| creditControlRequestUpdateAnswersReceived | long | tmnxMobPdnGxStatRxCcaUpdate | The value of tmnxMobPdnGxStatRxCcaUpdate indicates the number of Credit Control Answer (CCA) Update messages received from this peer. |
| creditControlRequestUpdateFailuresReceived | long | tmnxMobPdnGxStatCcrUpdateFails | The value of tmnxMobPdnGxStatCcrUpdateFails indicates the number of Credit Control Request (CCR) Update message failures. |
| creditControlRequestUpdateRequestsTransmitted | long | tmnxMobPdnGxStatTxCcrUpdate | The value of tmnxMobPdnGxStatTxCcrUpdate indicates the number of Credit Control Request (CCR) Update messages transmitted to this peer. |

**(3 of 15)**

| 5620 SAM counter name | Type | MIB counter name | Description |
|---|---|---|---|
| deviceWatchdogAnswersReceived | long | tmnxMobPdnGxStatRxDwa | The value of tmnxMobPdnGxStatRxDwa indicates the number of Device Watchdog Answer (DWA) messages received from this peer. |
| deviceWatchdogRequestsTransmitted | long | tmnxMobPdnGxStatTxDwr | The value of tmnxMobPdnGxStatTxDwr indicates the number of Device Watchdog Request (DWR) messages transmitted to this peer. |
| disconnectPeerAnswersTransmitted | long | tmnxMobPdnGxStatTxDpa | The value of tmnxMobPdnGxStatTxDpa indicates the number of Disconnect Peer Answer (DPA) messages transmitted to this peer. |
| disconnectPeerRequestsReceived | long | tmnxMobPdnGxStatRxDpr | The value of tmnxMobPdnGxStatRxDpr indicates the number of Disconnect Peer Request (DPR) messages received from this peer. |
| epcId | long | tmnxMobGwId | The value of tmnxMobGwId uniquely identifies a mobile gateway configured in the system. |
| invalidCapabilitiesExchangeAnswersReceived | long | tmnxMobPdnGxStatRxInvalidCea | The value of tmnxMobPdnGxStatRxInvalidCea indicates the number of invalid Capabilities Exchange Answer (CEA) messages received from this peer. |
| oversizedMsgReceived | long | tmnxMobPdnGxStatRxMsgTooBig | The value of tmnxMobPdnGxStatRxMsgTooBig indicates the number of oversize messages received from this peer. |
| peerIpAddress | String | tmnxMobPdnGxPeerAddress | The value of tmnxMobPdnGxPeerAddress indicates the IP address of the peer on Gx reference point. |
| peerIpAddressType | int | tmnxMobPdnGxPeerAddressType | The value of tmnxMobPdnGxPeerAddressType indicates the type of address represented by tmnxMobPdnGxPeerAddress. |
| peerTcpPort | int | tmnxMobPdnGxPeerPort | The value of tmnxMobPdnGxPeerPort indicates the port number of this peer. |
| reAuthorizationAnswersTransmitted | long | tmnxMobPdnGxStatTxRaa | The value of tmnxMobPdnGxStatTxRaa indicates the number of Re-Auth Answer (RAA) messages transmitted to this peer. |
| reAuthorizationRequestsMalformedPacketsReceived | long | tmnxMobPdnGxStatRxRarMalformPkts | The value of tmnxMobPdnGxStatRxRarMalformPkts indicates the number of Re-Auth Request (RAR) malformed packets received from this peer. |
| reAuthorizationRequestsMissingMandatoryInformationElementPacketsReceived | long | tmnxMobPdnGxStatRxRarMissIePkts | The value of tmnxMobPdnGxStatRxRarMissIePkts indicates the number of Re-Auth Request (RAR) missing mandatory Information Element (IE) packets received from this peer. |

**(4 of 15)**

| 5620 SAM counter name | Type | MIB counter name | Description |
|---|---|---|---|
| reAuthorizationRequestsNacksTransmitted | long | tmnxMobPdnGxStatTxRaaNack | The value of tmnxMobPdnGxStatTxRaaNack indicates the number of Re-Auth Answer (RAA) negative acknowledgement (NACK) messages transmitted to this peer. |
| reAuthorizationRequestsReceived | long | tmnxMobPdnGxStatRxRar | The value of tmnxMobPdnGxStatRxRar indicates the number of Re-Auth Request (RAR) messages received from this peer. |
| reAuthorizationRequestsUnknownPacketsReceived | long | tmnxMobPdnGxStatRxRarUnknownPkts | The value of tmnxMobPdnGxStatRxRarUnknownPkts indicates the number of Re-Auth Request (RAR) unknown packets received from this peer. |
| reAuthorizationRequestsUnknownSessionPacketsReceived | long | tmnxMobPdnGxStatRxRarUnkSession | The value of tmnxMobPdnGxStatRxRarUnkSession indicates the number of Re-Auth Request (RAR) unknown session packets received from this peer. |
| totalMalformedPacketsReceived | long | tmnxMobPdnGxStatRxMalformedPkts | The value of tmnxMobPdnGxStatRxMalformedPkts indicates the number of malformed packets received from this peer. |
| totalMissingMandatoryInformationElementPacketsReceived | long | tmnxMobPdnGxStatRxMissingIePkts | The value of tmnxMobPdnGxStatRxMissingIePkts indicates the number of missing mandatory Information Element (IE) packets received from this peer. |
| totalMsgReceived | long | tmnxMobPdnGxStatRxMsgs | The value of tmnxMobPdnGxStatRxMsgs indicates the total number of messages received from this peer. |
| totalMsgRetransmitted | long | tmnxMobPdnGxStatTxRetransmitMsgs | The value of tmnxMobPdnGxStatTxRetransmitMsgs indicates the number of retransmit messages transmitted to this peer. |
| totalMsgTransmitted | long | tmnxMobPdnGxStatTxMsgs | The value of tmnxMobPdnGxStatTxMsgs indicates the total number of messages transmitted to this peer. |
| totalUnknownPacketsReceived | long | tmnxMobPdnGxStatRxUnknownPkts | The value of tmnxMobPdnGxStatRxRarMalformPkts indicates the number of unknown packets received from this peer. |
| transportDisconnectionMsgReceived | long | tmnxMobPdnGxStatRxTransportDisc | The value of tmnxMobPdnGxStatRxTransportDisc indicates the number of remote transport disconnect messages received from this peer. |
| undersizedMsgReceived | long | tmnxMobPdnGxStatRxMsgTooSmall | The value of tmnxMobPdnGxStatRxMsgTooSmall indicates the number of small messages received from this peer. |
| unexpectedVersionMsgReceived | long | tmnxMobPdnGxStatRxMsgUnexpectVer | The value of tmnxMobPdnGxStatRxMsgUnexpectVer indicates the number of unexpected version messages received from this peer. |
| virtualRouterId | int | vRtrID | — |

**(5 of 15)**

| 5620 SAM counter name | Type | MIB counter name | Description |
|---|---|---|---|
| **IpPoolEntryStats**<br>MIB table name: TIMETRA-VRTR-MIB.vRtrIpPoolStatTable<br>Monitored class: lte.IpPoolEntry | | | |
| ipPoolNoOfAddressesAllocated | long | vRtrIpPoolStatAllocated | The value of the object vRtrIpPoolStatAllocated indicates the number of IP Addresses used. |
| ipPoolNoOfAddressesFree | long | vRtrIpPoolStatFree | The value of the object vRtrIpPoolStatFree indicates the number of free IP Addresses. |
| ipPoolNoOfAddressesHeld | long | vRtrIpPoolStatHeld | The value of the object vRtrIpPoolStatHeld indicates the number of IP Addresses held. |
| **RfPeerStats**<br>MIB table name: TIMETRA-MOBILE-GATEWAY-MIB.tmnxMobGwRfStatTable<br>Monitored class: lte.RfPeer | | | |
| acrInterimMsgTransmitFailed | long | tmnxMobGwRfStatTxAcrInterimFail | The value of tmnxMobGwRfStatTxAcrInterimFail indicates the number of Accounting Request (ACR) Interim message failures. |
| acrInterimMsgTransmitted | long | tmnxMobGwRfStatTxAcrInterim | The value of tmnxMobGwRfStatTxAcrInterim indicates the number of Accounting Request (ACR) Interim messages transmitted to this peer. |
| acrStartMsgTransmitFailed | long | tmnxMobGwRfStatTxAcrStartFails | The value of tmnxMobGwRfStatTxAcrStartFails indicates the number of Accounting Request (ACR) Start message failures. |
| acrStartMsgTransmitted | long | tmnxMobGwRfStatTxAcrStart | The value of tmnxMobGwRfStatTxAcrStart indicates the number of Accounting Request (ACR) Start messages transmitted to this peer. |
| acrStopMsgTransmitFailed | long | tmnxMobGwRfStatTxAcrStopFails | The value of tmnxMobGwRfStatTxAcrStopFails indicates the number of Accounting Request (ACR) Stop message failures. |
| acrStopMsgTransmitted | long | tmnxMobGwRfStatTxAcrStop | The value of tmnxMobGwRfStatTxAcrStop indicates the number of Accounting Request (ACR) Stop messages transmitted to this peer. |
| ceaReceived | long | tmnxMobGwRfStatRxCea | The value of tmnxMobGwRfStatRxCea indicates the number of Capabilities Exchange Answer (CEA) messages received from this peer. |
| cerTransmitted | long | tmnxMobGwRfStatTxCer | The value of tmnxMobGwRfStatTxCer indicates the number of Capabilities Exchange Request (CER) messages transmitted to this peer. |
| chassisIndex | long | tmnxChassisIndex | — |
| connAttempts | long | tmnxMobGwRfStatConnAttempts | The value of tmnxMobGwRfStatConnAttempts indicates the number of connections attempted to this peer. |

**(6 of 15)**

| 5620 SAM counter name | Type | MIB counter name | Description |
|---|---|---|---|
| connFailures | long | tmnxMobGwRfStatConnFailures | The value of tmnxMobGwRfStatConnFailures indicates the number of failed connections with this peer. |
| dpaTransmitted | long | tmnxMobGwRfStatTxDpa | The value of tmnxMobGwRfStatTxDpa indicates the number of Disconnect Peer Answer (DPA) messages transmitted to this peer. |
| dprReceived | long | tmnxMobGwRfStatRxDpr | The value of tmnxMobGwRfStatRxDpr indicates the number of Disconnect Peer Request (DPR) messages received from this peer. |
| dwaReceived | long | tmnxMobGwRfStatRxDwa | The value of tmnxMobGwRfStatRxDwa indicates the number of Device Watchdog Answer (DWA) messages received from this peer. |
| dwrTransmitted | long | tmnxMobGwRfStatTxDwr | The value of tmnxMobGwRfStatTxDwr indicates the number of Device Watchdog Request (DWR) messages transmitted to this peer. |
| epcId | long | tmnxMobGwId | The value of tmnxMobGwId uniquely identifies a mobile gateway configured in the system. |
| invalidCeaReceived | long | tmnxMobGwRfStatRxInvalidCea | The value of tmnxMobGwRfStatRxInvalidCea indicates the number of invalid Capabilities Exchange Answer (CEA) messages received from this peer. |
| peerIpAddress | String | tmnxMobGwRfPeerAddress | The value of tmnxMobGwRfPeerAddress indicates the IP address of the peer on Rf reference point. |
| peerIpAddressType | int | tmnxMobGwRfPeerAddressType | The value of tmnxMobGwRfPeerAddressType indicates the type of address represented by tmnxMobGwRfPeerAddress. |
| peerTcpPort | int | tmnxMobGwRfPeerPort | The value of tmnxMobGwRfPeerPort indicates the port number of this peer. |
| tooBigMsgReceived | long | tmnxMobGwRfStatRxMsgTooBig | The value of tmnxMobGwRfStatRxMsgTooBig indicates the number of oversize messages received from this peer. |
| tooSmallMsgReceived | long | tmnxMobGwRfStatRxMsgTooSmall | The value of tmnxMobGwRfStatRxMsgTooSmall indicates the number of small messages received from this peer. |
| totalMsgReceived | long | tmnxMobGwRfStatRxMsgs | The value of tmnxMobGwRfStatRxMsgs indicates the total number of messages received from this peer. |
| totalMsgRetransmitted | long | tmnxMobGwRfStatTxRetransmitMsgs | The value of tmnxMobGwRfStatTxRetransmitMsgs indicates the number of retransmit messages transmitted to this peer. |

**(7 of 15)**

| 5620 SAM counter name | Type | MIB counter name | Description |
|---|---|---|---|
| totalMsgTransmitted | long | tmnxMobGwRfStatTxMsgs | The value of tmnxMobGwRfStatTxMsgs indicates the total number of messages transmitted to this peer. |
| transportDiscMsgReceived | long | tmnxMobGwRfStatRxTransportDisc | The value of tmnxMobGwRfStatRxTransportDisc indicates the number of remote transport disconnect messages received from this peer. |
| unexpectedVerMsgReceived | long | tmnxMobGwRfStatRxMsgUnexpectVer | The value of tmnxMobGwRfStatRxMsgUnexpectVer indicates the number of unexpected version messages received from this peer. |
| virtualRouterId | int | vRtrID | — |
| **S11AgwPeerStats**<br>MIB table name: TIMETRA-MOBILE-SERVING-MIB.tmnxMobServS11StatTable<br>Monitored class: lte.S11Peer | | | |
| cardSlotNumber | long | tmnxCardSlotNum | — |
| chassisIndex | long | tmnxChassisIndex | — |
| createBearerRequestReceived | long | tmnxMobServS11StatCreateBearrReq | The value of tmnxMobServS11StatCreateBearrReq indicates the number of create bearer request messages transmitted to this peer. |
| createBearerResponseTransmitted | long | tmnxMobServS11StatCreateBearrRsp | The value of tmnxMobServS11StatCreateBearrRsp indicates the number of create bearer response messages received from this peer. |
| createSessionRequestReceived | long | tmnxMobServS11StatCreateSessnReq | The value of tmnxMobServS11StatCreateSessnReq indicates the number of create session request messages received from this peer. |
| createSessionResponseTransmitted | long | tmnxMobServS11StatCreateSessnRsp | The value of tmnxMobServS11StatCreateSessnRsp indicates the number of create session response messages transmitted to this peer. |
| deleteBearerRequestReceived | long | tmnxMobServS11StatDeleteBearrReq | The value of tmnxMobServS11StatDeleteBearrReq indicates the number of delete bearer request messages transmitted to this peer. |
| deleteBearerResponseTransmitted | long | tmnxMobServS11StatDeleteBearrRsp | The value of tmnxMobServS11StatDeleteBearrRsp indicates the number of delete bearer response messages received from this peer. |
| deleteSessionRequestReceived | long | tmnxMobServS11StatDeleteSessnReq | The value of tmnxMobServS11StatDeleteSessnReq indicates the number of delete session request messages received from this peer. |

**(8 of 15)**

| 5620 SAM counter name | Type | MIB counter name | Description |
|---|---|---|---|
| deleteSessionResponseTransmitted | long | tmnxMobServS11StatDeleteSessnRsp | The value of tmnxMobServS11StatDeleteSessnRsp indicates the number of delete session response messages transmitted to this peer. |
| downlinkAcknowledgementsReceived | long | tmnxMobServS11StatRxDlAcks | The value of tmnxMobServS11StatRxDlAcks indicates the number of downlink data notification acknowledgements received from this peer. |
| downlinkFailureNotificationsReceived | long | tmnxMobServS11StatRxDlFailNotify | The value of tmnxMobServS11StatRxDlFailNotify indicates the number of downlink data notification failure indication messages received from this peer. |
| downlinkNotificationsTransmitted | long | tmnxMobServS11StatTxDlNotify | The value of tmnxMobServS11StatTxDlNotify indicates the number of downlink data notification messages transmitted to this peer. |
| echoRequestReceived | long | tmnxMobServS11StatRxEchoRequests | The value of tmnxMobServS11StatRxEchoRequests indicates the number of echo request messages received from this peer. |
| echoRequestTransmitted | long | tmnxMobServS11StatTxEchoRequests | The value of tmnxMobServS11StatTxEchoRequests indicates the number of echo request messages transmitted to this peer. |
| echoResponseReceived | long | tmnxMobServS11StatRxEchoResp | The value of tmnxMobServS11StatRxEchoResp indicates the number of echo response messages received from this peer. |
| echoResponseTransmitted | long | tmnxMobServS11StatTxEchoResp | The value of tmnxMobServS11StatTxEchoResp indicates the number of echo response messages transmitted to this peer. |
| malformedPacketsReceived | long | tmnxMobServS11StatRxMalfrmedPkts | The value of tmnxMobServS11StatRxMalfrmedPkts indicates the number of malformed packets received from this peer. |
| missingInfoElementPacketsReceived | long | tmnxMobServS11StatRxMissnglePkts | The value of tmnxMobServS11StatRxMissnglePkts indicates the number of missing mandatory Information Element (IE) packets received from this peer. |
| modifyBearerRequestReceived | long | tmnxMobServS11StatModifyBearrReq | The value of tmnxMobServS11StatModifyBearrReq indicates the number of modify bearer request messages received from this peer. |
| modifyBearerResponseTransmitted | long | tmnxMobServS11StatModifyBearrRsp | The value of tmnxMobServS11StatModifyBearrRsp indicates the number of modify bearer response messages transmitted to this peer. |

**(9 of 15)**

| 5620 SAM counter name | Type | MIB counter name | Description |
|---|---|---|---|
| numberOfBearerCommandMsgRecd | long | tmnxMobServS11StatModifyBearrCmd | The value of tmnxMobServS11StatModifyBearrCmd indicates the number of modify bearer command messages received from this peer. |
| numberOfCrtIndrTnlReq | long | tmnxMobServS11StatCrtIndrTnlReq | The value of tmnxMobServS11StatCrtIndrTnlReq indicates the number of Create Indirect Data Forwarding Tunnel Request messages transmitted by this peer. |
| numberOfCrtIndrTnlResp | long | tmnxMobServS11StatCrtIndrTnlResp | The value of tmnxMobServS11StatCrtIndrTnlResp indicates the number of Create Indirect Data Forwarding Tunnel Response messages transmitted to this peer. |
| numberOfDelBearerCommandMsgRecd | long | tmnxMobServS11StatDeleteBearrCmd | The value of tmnxMobServS11StatDeleteBearrCmd indicates the number of delete bearer command messages received from this peer. |
| numberOfDelBearerFailMsgRecd | long | tmnxMobServS11StatDeleteBearrFlr | The value of tmnxMobServS11StatDeleteBearrFlr indicates the number of delete bearer failure messages received from this peer. |
| numberOfDelIndrTnlReq | long | tmnxMobServS11StatDelIndrTnlReq | The value of tmnxMobServS11StatDelIndrTnlReq indicates the number of Delete Indirect Data Forwarding Tunnel Request messages transmitted by this peer. |
| numberOfDelIndrTnlResp | long | tmnxMobServS11StatDelIndrTnlResp | The value of tmnxMobServS11StatDelIndrTnlResp indicates the number of Delete Indirect Data Forwarding Tunnel Response messages transmitted to this peer. |
| numberOfModifyBearerFailMsgRecd | long | tmnxMobServS11StatModifyBearrFlr | The value of tmnxMobServS11StatModifyBearrFlr indicates the number of modify bearer failure messages received from this peer. |
| numberOfRelBearersReq | long | tmnxMobServS11StatRelBearersReq | The value of tmnxMobServS11StatRelBearersReq indicates the number of Release Access Bearers Request messages transmitted by this peer. |
| numberOfRelBearersResp | long | tmnxMobServS11StatRelBearersResp | The value of tmnxMobServS11StatRelBearersResp indicates the number of Release Access Bearers Response messages transmitted to this peer. |
| numberOfUpdateBearerReqMsg | long | tmnxMobServS11StatUpdateBearrReq | The value of tmnxMobServS11StatUpdateBearrReq indicates the number of update bearer request messages transmitted to this peer. |

**(10 of 15)**

| 5620 SAM counter name | Type | MIB counter name | Description |
|---|---|---|---|
| numberOfUpdateBearerResMsg | long | tmnxMobServS11StatUpdateBearrRsp | The value of tmnxMobServS11StatUpdateBearrRsp indicates the number of update bearer response messages received from this peer. |
| pagingInitiatedServiceRequestsReceived | long | tmnxMobServS11StatPagingSvcReq | The value of tmnxMobServS11StatPagingSvcReq indicates the number of paging initiated service requests received from this peer. This object was made obsolete in the 3.0 release. |
| pathManagementFailures | long | tmnxMobServS11StatPathMgmtFails | The value of tmnxMobServS11StatPathMgmtFails indicates the number of path management failures for this peer. |
| peerIpAddress | String | tmnxMobServS11PeerAddress | The value of tmnxMobServS11PeerAddress indicates the IP address of this peer on S11 reference point. |
| peerIpAddressType | int | tmnxMobServS11PeerAddressType | The value of tmnxMobServS11PeerAddressType indicates the type of address represented by tmnxMobServS11PeerAddress. |
| peerRestartCount | long | tmnxMobServS11StatPeerRestartCnt | The value of tmnxMobServS11StatPeerRestartCnt indicates the counter value of the number of times this peer restarted. |
| peerRestarts | long | tmnxMobServS11StatPeerRestarts | The value of tmnxMobServS11StatPeerRestarts indicates the number of times this peer restarted. |
| peerTcpPort | int | tmnxMobServS11PeerPort | The value of tmnxMobServS11PeerPort indicates the port number of this peer. |
| unknownTypePacketsReceived | long | tmnxMobServS11StatRxUnknownPkts | The value of tmnxMobServS11StatRxUnknownPkts indicates the number of unknown message type packets received from this peer. |
| virtualRouterId | int | vRtrID | — |
| **S1uAgwPeerStats**<br>MIB table name: TIMETRA-MOBILE-SERVING-MIB.tmnxMobServS1uStatTable<br>Monitored class: lte.S1uPeer | | | |
| cardSlotNumber | long | tmnxCardSlotNum | — |
| chassisIndex | long | tmnxChassisIndex | — |
| echoRequestReceived | long | tmnxMobServS1uStatRxEchoRequests | The value of tmnxMobServS1uStatRxEchoRequests indicates the number of echo request messages received from this peer. |
| echoRequestTransmitted | long | tmnxMobServS1uStatTxEchoRequests | The value of tmnxMobServS1uStatTxEchoRequests indicates the number of echo request messages transmitted to this peer. |

**(11 of 15)**

| 5620 SAM counter name | Type | MIB counter name | Description |
|---|---|---|---|
| echoResponseReceived | long | tmnxMobServS1uStatRxEchoResponse | The value of tmnxMobServS1uStatRxEchoResponse indicates the number of echo response messages received from this peer. |
| echoResponseTransmitted | long | tmnxMobServS1uStatTxEchoResponse | The value of tmnxMobServS1uStatTxEchoResponse indicates the number of echo response messages transmitted to this peer. |
| pathManagementFailures | long | tmnxMobServS1uStatPathMgmtFails | The value of tmnxMobServS1uStatPathMgmtFails indicates the number of path management failures for this peer. |
| peerIpAddress | String | tmnxMobServS1uPeerAddress | The value of tmnxMobServS1uPeerAddress indicates the IP address of the peer on S1-U reference point. |
| peerIpAddressType | int | tmnxMobServS1uPeerAddressType | The value of tmnxMobServS1uPeerAddressType indicates the type of address represented by tmnxMobServS1uPeerAddress. |
| peerRestartCount | long | tmnxMobServS1uStatPeerRestartCnt | The value of tmnxMobServS1uStatPeerRestartCnt indicates the counter value of the number of times this peer restarted. |
| peerRestarts | long | tmnxMobServS1uStatPeerRestarts | The value of tmnxMobServS1uStatPeerRestarts indicates the number of times this peer restarted. |
| peerTcpPort | int | tmnxMobServS1uPeerPort | The value of tmnxMobServS1uPeerPort indicates the port number of this peer. |
| virtualRouterId | int | vRtrID | — |
| **S5AgwPeerStats**<br>MIB table name: TIMETRA-MOBILE-GATEWAY-MIB.tmnxMobGwS5StatTable<br>Monitored class: lte.S5Peer | | | |
| cardSlotNumber | long | tmnxCardSlotNum | — |
| chassisIndex | long | tmnxChassisIndex | — |
| createBearerRequestReceived | long | tmnxMobGwS5StatCreateBearerReq | The value of tmnxMobGwS5StatCreateBearerReq indicates the number of create bearer request messages received from this peer or transmitted to this peer. |
| createBearerResponseTransmitted | long | tmnxMobGwS5StatCreateBearerRsp | The value of tmnxMobGwS5StatCreateBearerRsp indicates the number of create bearer response messages received from this peer or transmitted to this peer. |
| createSessionRequestReceived | long | tmnxMobGwS5StatCreateSessnReq | The value of tmnxMobGwS5StatCreateSessnReq indicates the number of create session request messages received from this peer or transmitted to this peer. |

**(12 of 15)**

| 5620 SAM counter name | Type | MIB counter name | Description |
|---|---|---|---|
| createSessionResponseTransmitted | long | tmnxMobGwS5StatCreateSessnResp | The value of tmnxMobGwS5StatCreateSessnResp indicates the number of create session response messages received from this peer or transmitted to this peer. |
| deleteBearerCommand | long | tmnxMobGwS5StatDeleteBearrCmd | The value of tmnxMobGwS5StatDeleteBearrCmd indicates the number of delete bearer command messages received from this peer. |
| deleteBearerFailure | long | tmnxMobGwS5StatDeleteBearrFlr | The value of tmnxMobGwS5StatDeleteBearrFlr indicates the number of delete bearer failure messages received from this peer. |
| deleteBearerRequestReceived | long | tmnxMobGwS5StatDeleteBearerReq | The value of tmnxMobGwS5StatDeleteBearerReq indicates the number of delete bearer request messages received from this peer or transmitted to this peer. |
| deleteBearerResponseTransmitted | long | tmnxMobGwS5StatDeleteBearerRsp | The value of tmnxMobGwS5StatDeleteBearerRsp indicates the number of delete bearer response messages received from this peer or transmitted to this peer. |
| deleteSessionRequestReceived | long | tmnxMobGwS5StatDeleteSessnReq | The value of tmnxMobGwS5StatDeleteSessnReq indicates the number of delete session request messages received from this peer or transmitted to this peer. |
| deleteSessionResponseTransmitted | long | tmnxMobGwS5StatDeleteSessnResp | The value of tmnxMobGwS5StatDeleteSessnResp indicates the number of delete session response messages received from this peer or transmitted to this peer. |
| echoRequestReceived | long | tmnxMobGwS5StatRxEchoRequests | The value of tmnxMobGwS5StatRxEchoRequests indicates the number of echo request messages received from this peer. |
| echoRequestTransmitted | long | tmnxMobGwS5StatTxEchoRequests | The value of tmnxMobGwS5StatTxEchoRequests indicates the number of echo request messages transmitted to this peer. |
| echoResponseReceived | long | tmnxMobGwS5StatRxEchoResponses | The value of tmnxMobGwS5StatRxEchoResponses indicates the number of echo response messages received from this peer. |
| echoResponseTransmitted | long | tmnxMobGwS5StatTxEchoResponses | The value of tmnxMobGwS5StatTxEchoResponses indicates the number of echo response messages transmitted to this peer. |
| malformedPacketsReceived | long | tmnxMobGwS5StatRxMalformedPkts | The value of tmnxMobGwS5StatRxMalformedPkts indicates the number of malformed packets received from this peer. |

**(13 of 15)**

| 5620 SAM counter name | Type | MIB counter name | Description |
|---|---|---|---|
| missingInfoElementPacketsReceived | long | tmnxMobGwS5StatRxMissinglePkts | The value of tmnxMobGwS5StatRxMissinglePkts indicates the number of missing mandatory Information Element (IE) packets received from this peer. |
| modifyBearerCommand | long | tmnxMobGwS5StatModifyBearrCmd | The value of tmnxMobGwS5StatModifyBearrCmd indicates the number of modify bearer command messages received from this peer. |
| modifyBearerFailure | long | tmnxMobGwS5StatModifyBearrFlr | The value of tmnxMobGwS5StatModifyBearrFlr indicates the number of modify bearer failure messages received from this peer. |
| modifyBearerRequestReceived | long | tmnxMobGwS5StatModifyBearerReq | The value of tmnxMobGwS5StatModifyBearerReq indicates the number of modify bearer request messages received from this peer or transmitted to this peer. |
| modifyBearerResponseTransmitted | long | tmnxMobGwS5StatModifyBearerRsp | The value of tmnxMobGwS5StatModifyBearerRsp indicates the number of modify bearer response messages received from this peer or transmitted to this peer. |
| pathManagementFailures | long | tmnxMobGwS5StatPathMgmtFails | The value of tmnxMobGwS5StatPathMgmtFails indicates the number of path management failures for this peer. |
| peerIpAddress | String | tmnxMobGwS5PeerAddress | The value of tmnxMobGwS5PeerAddress indicates the IP address of the peer on S5 reference point. |
| peerIpAddressType | int | tmnxMobGwS5PeerAddressType | The value of tmnxMobGwS5PeerAddressType indicates the type of address represented by tmnxMobGwS5PeerAddress. |
| peerRestartCount | long | tmnxMobGwS5StatPeerRestrtCount | The value of tmnxMobGwS5StatPeerRestrtCount indicates the counter value of the number of times this peer restarted. |
| peerRestarts | long | tmnxMobGwS5StatPeerRestarts | The value of tmnxMobGwS5StatPeerRestarts indicates the number of times this peer restarted after registering with the system. |
| peerTcpPort | int | tmnxMobGwS5PeerPort | The value of tmnxMobGwS5PeerPort indicates the port number of this peer. |
| unknownTypePacketsReceived | long | tmnxMobGwS5StatRxUnknownPkts | The value of tmnxMobGwS5StatRxUnknownPkts indicates the number of unknown message type packets received from this peer. |
| updateBearerRequest | long | tmnxMobGwS5StatUpdateBearerReq | The value of tmnxMobGwS5StatUpdateBearerReq indicates the number of update bearer request messages received from this peer or transmitted to this peer. |

**(14 of 15)**

| 5620 SAM counter name | Type | MIB counter name | Description |
|---|---|---|---|
| updateBearerResponses | long | tmnxMobGwS5StatUpdateBearerRsp | The value of tmnxMobGwS5StatUpdateBearerRsp indicates the number of update bearer response messages received from this peer or transmitted to this peer. |
| virtualRouterId | int | vRtrID | — |

**(15 of 15)**

### Table A-27 lteggsn statistics

| 5620 SAM counter name | Type | MIB counter name | Description |
|---|---|---|---|
| **GnPeerStats**<br>MIB table name: TIMETRA-MOBILE-PDN-MIB.tmnxMobPdnGnStatTable<br>Monitored class: lteggsn.GnPeer | | | |
| cardSlotNumber | long | tmnxCardSlotNum | — |
| chassisIndex | long | tmnxChassisIndex | — |
| createPdpRequest | long | tmnxMobPdnGnStatCreatePdpReq | The value of tmnxMobPdnGnStatCreatePdpReq indicates the number of create Packet Data Protocol (PDP) request messages received from this peer or transmitted to this peer. |
| createPdpResponse | long | tmnxMobPdnGnStatCreatePdpRsp | The value of tmnxMobPdnGnStatCreatePdpRsp indicates the number of create Packet Data Protocol (PDP) response messages received from this peer or transmitted to this peer. |
| deletePdpRequest | long | tmnxMobPdnGnStatDeletePdpReq | The value of tmnxMobPdnGnStatDeletePdpReq indicates the number of delete Packet Data Protocol (PDP) request messages received from this peer or transmitted to this peer. |
| deletePdpResponse | long | tmnxMobPdnGnStatDeletePdpRsp | The value of tmnxMobPdnGnStatDeletePdpRsp indicates the number of delete Packet Data Protocol (PDP) response messages received from this peer or transmitted to this peer. |
| modifyPdpRequest | long | tmnxMobPdnGnStatModifyPdpReq | The value of tmnxMobPdnGnStatModifyPdpReq indicates the number of modify Packet Data Protocol (PDP) request messages received from this peer or transmitted to this peer. |
| modifyPdpResponse | long | tmnxMobPdnGnStatModifyPdpRsp | The value of tmnxMobPdnGnStatModifyPdpRsp indicates the number of modify Packet Data Protocol (PDP) response messages received from this peer or transmitted to this peer. |

**(1 of 12)**

| 5620 SAM counter name | Type | MIB counter name | Description |
|---|---|---|---|
| peerIpAddress | String | tmnxMobPdnGnPeerAddr ess | The value of tmnxMobPdnGnPeerAddress indicates the IP address of the peer on Gn reference point. |
| peerIpAddressType | int | tmnxMobPdnGnPeerAddr essType | The value of tmnxMobPdnGnPeerAddressType indicates the type of address represented by tmnxMobPdnGnPeerAddress. |
| peerPathMgmtFailures | long | tmnxMobPdnGnStatPathM gmtFails | The value of tmnxMobPdnGnStatPathMgmtFails indicates the number of path management failures for this peer. |
| peerRestartCount | long | tmnxMobPdnGnStatPeerR estrtCount | The value of tmnxMobPdnGnStatPeerRestrtCount indicates the counter value of the number of times this peer restarted. |
| peerRestarts | long | tmnxMobPdnGnStatPeerR estarts | The value of tmnxMobPdnGnStatPeerRestarts indicates the number of times this peer restarted after registering with the system. |
| peerTcpPort | int | tmnxMobPdnGnPeerPort | The value of tmnxMobPdnGnPeerPort indicates the port number of this peer. |
| rxEchoRequest | long | tmnxMobPdnGnStatRxEch oRequests | The value of tmnxMobPdnGnStatRxEchoRequests indicates the number of echo request messages received from this peer. |
| rxEchoResponse | long | tmnxMobPdnGnStatRxEch oResponses | The value of tmnxMobPdnGnStatRxEchoResponses indicates the number of echo response messages received from this peer. |
| rxErrorIndication | long | tmnxMobPdnGnStatRxErr orsIndCnt | The value of tmnxMobPdnGnStatRxErrorsIndCnt indicates the number of indication request errors transmitted to this peer. |
| rxMalformedPackets | long | tmnxMobPdnGnStatRxMal formedPkts | The value of tmnxMobPdnGnStatRxMalformedPkts indicates the number of malformed packets received from this peer. |
| rxMissinglePackets | long | tmnxMobPdnGnStatRxMis singlePkts | The value of tmnxMobPdnGnStatRxMissinglePkts indicates the number of missing mandatory Information Element (IE) packets received from this peer. |
| rxUnknownPackets | long | tmnxMobPdnGnStatRxUnk nownPkts | The value of tmnxMobPdnGnStatRxUnknownPkts indicates the number of unknown message type packets received from this peer. |
| txEchoRequest | long | tmnxMobPdnGnStatTxEch oRequests | The value of tmnxMobPdnGnStatTxEchoRequests indicates the number of echo request messages transmitted to this peer. |

**(2 of 12)**

| 5620 SAM counter name | Type | MIB counter name | Description |
|---|---|---|---|
| txEchoResponse | long | tmnxMobPdnGnStatTxEchoResponses | The value of tmnxMobPdnGnStatTxEchoResponses indicates the number of echo response messages transmitted to this peer. |
| txErrorIndication | long | tmnxMobPdnGnStatTxErrorsIndCnt | The value of tmnxMobPdnGnStatTxErrorsIndCnt indicates the number of indication response errors received from this peer. |
| virtualRouterId | int | vRtrID | — |
| **PgwGaPeerStats**<br>MIB table name: TIMETRA-MOBILE-PDN-MIB.tmnxMobPdnGaStatTable<br>Monitored class: lteggsn.PgwGaPeer | | | |
| address | String | tmnxMobPdnGaStatAddress | The value of tmnxMobPdnGaStatAddress indicates the IP address of the peer on Ga reference point. When the length of tmnxMobPdnGaStatAddress is equal to 0 then the peer is a Fully Qualified Domain Name (FQDN) address and this entry represents an aggregate of all the peer IP addresses that this FQDN resolves to. In this case the value of tmnxMobPdnGaStatAddressType is unknown and the value of tmnxMobPdnGaStatPort is equal to 0. |
| addressType | int | tmnxMobPdnGaStatAddressType | The value of tmnxMobPdnGaStatAddressType indicates the type of address represented by tmnxMobPdnGaStatAddress. When the value of tmnxMobPdnGaStatAddressType is unknown then the peer is a Fully Qualified Domain Name (FQDN) address and this entry represents an aggregate of all the peer IP addresses that this FQDN resolves to. |
| cdrsRx | long | tmnxMobPdnGaStatCdrsRx | The value of tmnxMobPdnGaStatCdrsRx indicates the total number of Charging Data Records (CDR) received on this peer. |
| cdrsTx | long | tmnxMobPdnGaStatCdrsTx | The value of tmnxMobPdnGaStatCdrsTx indicates the total number of Charging Data Records (CDR) sent from this peer. |
| epcId | long | tmnxMobGwId | The value of tmnxMobGwId uniquely identifies a mobile gateway configured in the system. |
| gaCardSlotNumber | long | tmnxCardSlotNum | — |
| gaChassisIndex | long | tmnxChassisIndex | — |
| gtpPriGrpName | String | tmnxMobGtpPriGrpName | — |
| gtpPrimeFail | long | tmnxMobPdnGaStatGtpPrimeFail | The value of tmnxMobPdnGaStatGtpPrimeFail indicates the number of GPRS Tunneling Protocol (GTP) prime message failures transmitted to this peer. |
| gtpPriServerIndex | int | tmnxMobGtpPriServerIndex | — |

**(3 of 12)**

| 5620 SAM counter name | Type | MIB counter name | Description |
|---|---|---|---|
| nodeAlReqRetried | long | tmnxMobPdnGaStatNodeAlReqRetried | The value of tmnxMobPdnGaStatNodeAlReqRetried indicates the number of node alive request retry messages transmitted from this peer. |
| operState | int | tmnxMobPdnGaStatOperState | The value of tmnxMobPdnGaStatOperState indicates the current operational state of this group. The operational state may be one of: 'up' - connection goes 'up' and is used by the Ga module to send Charging Data Records (CDRs). 'down' - connection goes 'down' and is used by the Ga module to send Charging Data Records (CDRs). 'active' - connection is 'active' and is used by the Ga module to send Charging Data Records (CDRs). |
| port | int | tmnxMobPdnGaStatPort | The value of tmnxMobPdnGaStatPort indicates the port number of this peer. When the value of tmnxMobPdnGaStatPort is equal to 0 then the peer is a Fully Qualified Domain Name (FQDN) address and this entry represents an aggregate of all the peer IP addresses that this FQDN resolves to. |
| retrDataRecReqs | long | tmnxMobPdnGaStatRetrDataRecReqs | The value of tmnxMobPdnGaStatRetrDataRecReqs indicates the number of Data record transfer requests retried to this peer. |
| rtrEchoRequests | long | tmnxMobPdnGaStatRtrEchoRequests | The value of tmnxMobPdnGaStatRtrEchoRequests indicates the number of echo request messages retried to this peer. |
| rxCdrDupReqFf | long | tmnxMobPdnGaStatRxCdrDupReqFf | The value of tmnxMobPdnGaStatRxCdrDupReqFf indicates the number of Charging Data Records (CDR) responses with cause value 'duplicate requests already fulfilled' received from this peer. |
| rxCdrInvMsgFmat | long | tmnxMobPdnGaStatRxCdrInvMsgFmat | The value of tmnxMobPdnGaStatRxCdrInvMsgFmat indicates the number of Charging Data Records (CDR) responses with cause value 'invalid message format' received from this peer. |
| rxCdrMandIeInc | long | tmnxMobPdnGaStatRxCdrMandIeInc | The value of tmnxMobPdnGaStatRxCdrMandIeInc indicates the number of Charging Data Records (CDR) responses with cause value 'mandatory Information Element (IE) incorrect' received from this peer. |
| rxCdrMandIeMiss | long | tmnxMobPdnGaStatRxCdrMandIeMiss | The value of tmnxMobPdnGaStatRxCdrMandIeMiss indicates the number of Charging Data Records (CDR) responses with cause value 'mandatory Information Element (IE) missing' received from this peer. |

**(4 of 12)**

| 5620 SAM counter name | Type | MIB counter name | Description |
|---|---|---|---|
| rxCdrNoResAva | long | tmnxMobPdnGaStatRxCdrNoResAva | The value of tmnxMobPdnGaStatRxCdrNoResAva indicates the number of Charging Data Records (CDR) responses with cause value 'no resources available' received from this peer. |
| rxCdrOptIeInc | long | tmnxMobPdnGaStatRxCdrOptIeInc | The value of tmnxMobPdnGaStatRxCdrOptIeInc indicates the number of Charging Data Records (CDR) responses with cause value 'optional Information Element (IE) incorrect' received from this peer. |
| rxCdrReqAcc | long | tmnxMobPdnGaStatRxCdrReqAcc | The value of tmnxMobPdnGaStatRxCdrReqAcc indicates the number of Charging Data Records (CDR) responses with cause value 'requests accepted' received from this peer. |
| rxCdrReqFfilled | long | tmnxMobPdnGaStatRxCdrReqFfilled | The value of tmnxMobPdnGaStatRxCdrReqFfilled indicates the number of Charging Data Records (CDR) responses with cause value 'requests already fulfilled' received from this peer. |
| rxCdrReqNotFf | long | tmnxMobPdnGaStatRxCdrReqNotFf | The value of tmnxMobPdnGaStatRxCdrReqNotFf indicates the number of Charging Data Records (CDR) responses with cause value 'requests not fulfilled' received from this peer. |
| rxCdrSrvcNotSupp | long | tmnxMobPdnGaStatRxCdrSrvcNotSupp | The value of tmnxMobPdnGaStatRxCdrSrvcNotSupp indicates the number of Charging Data Records (CDR) responses with cause value 'service not supported' received from this peer. |
| rxCdrSystemFail | long | tmnxMobPdnGaStatRxCdrSystemFail | The value of tmnxMobPdnGaStatRxCdrSystemFail indicates the number of Charging Data Records (CDR) responses with cause value 'system failure' received from this peer. |
| rxCdrVerNotSupp | long | tmnxMobPdnGaStatRxCdrVerNotSupp | The value of tmnxMobPdnGaStatRxCdrVerNotSupp indicates the number of Charging Data Records (CDR) responses with cause value 'version not supported' received from this peer. |
| rxDataRecReqs | long | tmnxMobPdnGaStatRxDataRecReqs | The value of tmnxMobPdnGaStatRxDataRecReqs indicates the number of Data record transfer requests received by this peer. |
| rxEchoRequests | long | tmnxMobPdnGaStatRxEchoRequests | The value of tmnxMobPdnGaStatRxEchoRequests indicates the number of echo request messages received from this peer. |

**(5 of 12)**

| 5620 SAM counter name | Type | MIB counter name | Description |
|---|---|---|---|
| rxEchoResponses | long | tmnxMobPdnGaStatRxEchoResponses | The value of tmnxMobPdnGaStatRxEchoResponses indicates the number of echo response messages received from this peer. |
| rxInvalidMsgs | long | tmnxMobPdnGaStatRxInvalidMsgs | The value of tmnxMobPdnGaStatRxInvalidMsgs indicates the number of invalid messages received from this peer. |
| rxNodeAlRequests | long | tmnxMobPdnGaStatRxNodeAlRequests | The value of tmnxMobPdnGaStatRxNodeAlRequests indicates the number of node alive request messages received from this peer. |
| rxNodeAlResps | long | tmnxMobPdnGaStatRxNodeAlResps | The value of tmnxMobPdnGaStatRxNodeAlResps indicates the number of node alive response messages received on this peer. |
| rxRedirectionReq | long | tmnxMobPdnGaStatRxRedirectionReq | The value of tmnxMobPdnGaStatRxRedirectionReq indicates the number of redirection request messages received from this peer. |
| rxVerNotSupp | long | tmnxMobPdnGaStatRxVerNotSupp | The value of tmnxMobPdnGaStatRxVerNotSupp indicates the number of version not supported messages received from this peer. |
| txCdrMaxChngCond | long | tmnxMobPdnGaStatTxCdrMaxChngCond | The value of tmnxMobPdnGaStatTxCdrMaxChngCond indicates the number of Charging Data Records (CDR) maximum change condition requests transmitted to this peer. |
| txCdrMsTmzChng | long | tmnxMobPdnGaStatTxCdrMsTmzChng | The value of tmnxMobPdnGaStatTxCdrMsTmzChng indicates the number of Charging Data Records (CDR) MS Time Zone Change requests transmitted to this peer. |
| txCdrPlmnChange | long | tmnxMobPdnGaStatTxCdrPlmnChange | The value of tmnxMobPdnGaStatTxCdrPlmnChange indicates the number of Charging Data Records (CDR) Public Land Mobile Network (PLMN) change requests transmitted to this peer. |
| txCdrRatChng | long | tmnxMobPdnGaStatTxCdrRatChng | The value of tmnxMobPdnGaStatTxCdrRatChng indicates the number of Charging Data Records (CDR) Radio Access Type (RAT) change requests transmitted to this peer. |
| txCdrSerNdChLmt | long | tmnxMobPdnGaStatTxCdrSerNdChLmt | The value of tmnxMobPdnGaStatTxCdrSerNdChLmt indicates the number of Charging Data Records (CDR) Serving Node Change Limit requests transmitted to this peer. |

**(6 of 12)**

| 5620 SAM counter name | Type | MIB counter name | Description |
|---|---|---|---|
| txCdrTermination | long | tmnxMobPdnGaStatTxCdrTermination | The value of tmnxMobPdnGaStatTxCdrTermination indicates the number of Charging Data Records (CDR) termination requests transmitted to this peer. |
| txCdrTimeLimit | long | tmnxMobPdnGaStatTxCdrTimeLimit | The value of tmnxMobPdnGaStatTxCdrTimeLimit indicates the number of Charging Data Records (CDR) time limit requests transmitted to this peer. |
| txCdrVolLimit | long | tmnxMobPdnGaStatTxCdrVolLimit | The value of tmnxMobPdnGaStatTxCdrVolLimit indicates the number of Charging Data Records (CDR) volume limit requests transmitted to this peer. |
| txDataRecReqs | long | tmnxMobPdnGaStatTxDataRecReqs | The value of tmnxMobPdnGaStatTxDataRecReqs indicates the number of Data record requests transmitted to this peer. |
| txDataRecTferReq | long | tmnxMobPdnGaStatTxDataRecTferReq | The value of tmnxMobPdnGaStatTxDataRecTferReq indicates the number of duplicate Data record transfer requests transmitted to this peer. |
| txEchoRequests | long | tmnxMobPdnGaStatTxEchoRequests | The value of tmnxMobPdnGaStatTxEchoRequests indicates the number of echo request messages transmitted to this peer. |
| txEchoResponses | long | tmnxMobPdnGaStatTxEchoResponses | The value of tmnxMobPdnGaStatTxEchoResponses indicates the number of echo response messages transmitted to this peer. |
| txNodeAlRequests | long | tmnxMobPdnGaStatTxNodeAlRequests | The value of tmnxMobPdnGaStatTxNodeAlRequests indicates the number of node alive request messages transmitted from this peer. |
| txNodeAlResps | long | tmnxMobPdnGaStatTxNodeAlResps | The value of tmnxMobPdnGaStatTxNodeAlResps indicates the number of node alive response messages transmitted to this peer. |
| txRedrnResp | long | tmnxMobPdnGaStatTxRedrnResp | The value of tmnxMobPdnGaStatTxRedrnResp indicates the number of redirection request messages transmitted to this peer. |
| unackDataRexReqs | long | tmnxMobPdnGaStatUnackDataRexReqs | The value of tmnxMobPdnGaStatUnackDataRexReqs indicates the number of Data record transfer requests unacknowledged by this peer. |
| upTime | long | tmnxMobPdnGaStatUpTime | The value of tmnxMobPdnGaStatUpTime indicates the time when the connection comes up. |
| virtualRouterId | int | vRtrID | — |

**(7 of 12)**

| 5620 SAM counter name | Type | MIB counter name | Description |
|---|---|---|---|
| **SgwGaPeerStats**<br>MIB table name: TIMETRA-MOBILE-SERVING-MIB.tmnxMobSgwGaStatTable<br>Monitored class: lteggsn.SgwGaPeer | | | |
| address | String | tmnxMobSgwGaStatAddress | The value of tmnxMobSgwGaStatAddress indicates the IP address of the peer on Ga reference point. When the length of tmnxMobSgwGaStatAddress is equal to 0 then the peer is a Fully Qualified Domain Name (FQDN) address and this entry represents an aggregate of all the peer IP addresses that this FQDN resolves to. In this case the value of tmnxMobSgwGaStatAddressType is unknown and the value of tmnxMobSgwGaStatPort is equal to 0. |
| addressType | int | tmnxMobSgwGaStatAddressType | The value of tmnxMobSgwGaStatAddressType indicates the type of address represented by tmnxMobSgwGaStatAddress. When the value of tmnxMobSgwGaStatAddressType is unknown then the peer is a Fully Qualified Domain Name (FQDN) address and this entry represents an aggregate of all the peer IP addresses that this FQDN resolves to. |
| cdrsRx | long | tmnxMobSgwGaStatCdrsRx | The value of tmnxMobSgwGaStatCdrsRx indicates the total number of Charging Data Records (CDR) received on this peer. |
| cdrsTx | long | tmnxMobSgwGaStatCdrsTx | The value of tmnxMobSgwGaStatCdrsTx indicates the total number of Charging Data Records (CDR) sent from this peer. |
| gaChassisIndex | long | tmnxChassisIndex | — |
| gtpPrimeFail | long | tmnxMobSgwGaStatGtpPrimeFail | The value of tmnxMobSgwGaStatGtpPrimeFail indicates the number of GPRS Tunneling Protocol (GTP) prime message failures transmitted to this peer. |
| nodeAlReqRetried | long | tmnxMobSgwGaStatNodeAlReqRetried | The value of tmnxMobSgwGaStatNodeAlReqRetried indicates the number of node alive request retry messages transmitted from this peer. |
| operState | int | tmnxMobSgwGaStatOperState | The value of tmnxMobSgwGaStatOperState indicates the current operational state of this group. The operational state may be one of: 'up' - connection goes 'up' and is used by the Ga module to send Charging Data Records (CDRs). 'down' - connection goes 'down' and is used by the Ga module to send Charging Data Records (CDRs). 'active' - connection is 'active' and is used by the Ga module to send Charging Data Records (CDRs). |

**(8 of 12)**

| 5620 SAM counter name | Type | MIB counter name | Description |
|---|---|---|---|
| port | int | tmnxMobSgwGaStatPort | The value of tmnxMobSgwGaStatPort indicates the port number of this peer. When the value of tmnxMobSgwGaStatPort is equal to 0 then the peer is a Fully Qualified Domain Name (FQDN) address and this entry represents an aggregate of all the peer IP addresses that this FQDN resolves to. |
| retrDataRecReqs | long | tmnxMobSgwGaStatRetrDataRecReqs | The value of tmnxMobSgwGaStatRetrDataRecReqs indicates the number of Data record transfer requests retried to this peer. |
| rtrEchoRequests | long | tmnxMobSgwGaStatRtrEchoRequests | The value of tmnxMobSgwGaStatRtrEchoRequests indicates the number of echo request messages retried to this peer. |
| rxCdrDupReqFf | long | tmnxMobSgwGaStatRxCdrDupReqFf | The value of tmnxMobSgwGaStatRxCdrDupReqFf indicates the number of Charging Data Records (CDR) responses with cause value 'duplicate requests already fulfilled' received from this peer. |
| rxCdrInvMsgFmat | long | tmnxMobSgwGaStatRxCdrInvMsgFmat | The value of tmnxMobSgwGaStatRxCdrInvMsgFmat indicates the number of Charging Data Records (CDR) responses with cause value 'invalid message format' received from this peer. |
| rxCdrMandIeInc | long | tmnxMobSgwGaStatRxCdrMandIeInc | The value of tmnxMobSgwGaStatRxCdrMandIeInc indicates the number of Charging Data Records (CDR) responses with cause value 'mandatory Information Element (IE) incorrect' received from this peer. |
| rxCdrMandIeMiss | long | tmnxMobSgwGaStatRxCdrMandIeMiss | The value of tmnxMobSgwGaStatRxCdrMandIeMiss indicates the number of Charging Data Records (CDR) responses with cause value 'mandatory Information Element (IE) missing' received from this peer. |
| rxCdrNoResAva | long | tmnxMobSgwGaStatRxCdrNoResAva | The value of tmnxMobSgwGaStatRxCdrNoResAva indicates the number of Charging Data Records (CDR) responses with cause value 'no resources available' received from this peer. |
| rxCdrOptIeInc | long | tmnxMobSgwGaStatRxCdrOptIeInc | The value of tmnxMobSgwGaStatRxCdrOptIeInc indicates the number of Charging Data Records (CDR) responses with cause value 'optional Information Element (IE) incorrect' received from this peer. |
| rxCdrReqAcc | long | tmnxMobSgwGaStatRxCdrReqAcc | The value of tmnxMobSgwGaStatRxCdrReqAcc indicates the number of Charging Data Records (CDR) responses with cause value 'requests accepted' received from this peer. |

**(9 of 12)**

| 5620 SAM counter name | Type | MIB counter name | Description |
|---|---|---|---|
| rxCdrReqFfilled | long | tmnxMobSgwGaStatRxCdrReqFfilled | The value of tmnxMobSgwGaStatRxCdrReqFfilled indicates the number of Charging Data Records (CDR) responses with cause value 'requests already fulfilled' received from this peer. |
| rxCdrReqNotFf | long | tmnxMobSgwGaStatRxCdrReqNotFf | The value of tmnxMobSgwGaStatRxCdrReqNotFf indicates the number of Charging Data Records (CDR) responses with cause value 'requests not fulfilled' received from this peer. |
| rxCdrSrvcNotSupp | long | tmnxMobSgwGaStatRxCdrSrvcNotSupp | The value of tmnxMobSgwGaStatRxCdrSrvcNotSupp indicates the number of Charging Data Records (CDR) responses with cause value 'Service not supported' received from this peer. |
| rxCdrSystemFail | long | tmnxMobSgwGaStatRxCdrSystemFail | The value of tmnxMobSgwGaStatRxCdrSystemFail indicates the number of Charging Data Records (CDR) responses with cause value 'system failure' received from this peer. |
| rxCdrVerNotSupp | long | tmnxMobSgwGaStatRxCdrVerNotSupp | The value of tmnxMobSgwGaStatRxCdrVerNotSupp indicates the number of Charging Data Records (CDR) responses with cause value 'version not supported' received from this peer. |
| rxDataRecReqs | long | tmnxMobSgwGaStatRxDataRecReqs | The value of tmnxMobSgwGaStatRxDataRecReqs indicates the number of Data record transfer requests received by this peer. |
| rxEchoRequests | long | tmnxMobSgwGaStatRxEchoRequests | The value of tmnxMobSgwGaStatRxEchoRequests indicates the number of echo request messages received from this peer. |
| rxEchoResponses | long | tmnxMobSgwGaStatRxEchoResponses | The value of tmnxMobSgwGaStatRxEchoResponses indicates the number of echo response messages received from this peer. |
| rxInvalidMsgs | long | tmnxMobSgwGaStatRxInvalidMsgs | The value of tmnxMobSgwGaStatRxInvalidMsgs indicates the number of invalid messages received from this peer. |
| rxNodeAlRequests | long | tmnxMobSgwGaStatRxNodeAlRequests | The value of tmnxMobSgwGaStatRxNodeAlRequests indicates the number of node alive request messages received from this peer. |
| rxNodeAlResps | long | tmnxMobSgwGaStatRxNodeAlResps | The value of tmnxMobSgwGaStatRxNodeAlResps indicates the number of node alive response messages received on this peer. |

**(10 of 12)**

| 5620 SAM counter name | Type | MIB counter name | Description |
|---|---|---|---|
| rxRedirectionReq | long | tmnxMobSgwGaStatRxRedirectionReq | The value of tmnxMobSgwGaStatRxRedirectionReq indicates the number of redirection request messages received from this peer. |
| rxVerNotSupp | long | tmnxMobSgwGaStatRxVerNotSupp | The value of tmnxMobSgwGaStatRxVerNotSupp indicates the number of version not supported messages received from this peer. |
| txCdrMaxChngCond | long | tmnxMobSgwGaStatTxCdrMaxChngCond | The value of tmnxMobSgwGaStatTxCdrMaxChngCond indicates the number of Charging Data Records (CDR) maximum change condition requests transmitted to this peer. |
| txCdrMsTmzChng | long | tmnxMobSgwGaStatTxCdrMsTmzChng | The value of tmnxMobSgwGaStatTxCdrMsTmzChng indicates the number of Charging Data Records (CDR) MS Time Zone Change requests transmitted to this peer. |
| txCdrRatChng | long | tmnxMobSgwGaStatTxCdrRatChng | The value of tmnxMobSgwGaStatTxCdrRatChng indicates the number of Charging Data Records (CDR) Radio Access Type (RAT) change requests transmitted to this peer. |
| txCdrTermination | long | tmnxMobSgwGaStatTxCdrTermination | The value of tmnxMobSgwGaStatTxCdrTermination indicates the number of Charging Data Records (CDR) termination requests transmitted to this peer. |
| txCdrTimeLimit | long | tmnxMobSgwGaStatTxCdrTimeLimit | The value of tmnxMobSgwGaStatTxCdrTimeLimit indicates the number of Charging Data Records (CDR) time limit requests transmitted to this peer. |
| txCdrVolLimit | long | tmnxMobSgwGaStatTxCdrVolLimit | The value of tmnxMobSgwGaStatTxCdrVolLimit indicates the number of Charging Data Records (CDR) volume limit requests transmitted to this peer. |
| txDataRecReqs | long | tmnxMobSgwGaStatTxDataRecReqs | The value of tmnxMobSgwGaStatTxDataRecReqs indicates the number of Data record requests transmitted to this peer. |
| txDataRecTferReq | long | tmnxMobSgwGaStatTxDataRecTferReq | The value of tmnxMobSgwGaStatTxDataRecTferReq indicates the number of duplicate Data record transfer requests transmitted to this peer. |
| txEchoRequests | long | tmnxMobSgwGaStatTxEchoRequests | The value of tmnxMobSgwGaStatTxEchoRequests indicates the number of echo request messages transmitted to this peer. |

**(11 of 12)**

| 5620 SAM counter name | Type | MIB counter name | Description |
|---|---|---|---|
| txEchoResponses | long | tmnxMobSgwGaStatTxEchoResponses | The value of tmnxMobSgwGaStatTxEchoResponses indicates the number of echo response messages transmitted to this peer. |
| txNodeAlRequests | long | tmnxMobSgwGaStatTxNodeAlRequests | The value of tmnxMobSgwGaStatTxNodeAlRequests indicates the number of node alive request messages transmitted from this peer. |
| txNodeAlResps | long | tmnxMobSgwGaStatTxNodeAlResps | The value of tmnxMobSgwGaStatTxNodeAlResps indicates the number of node alive response messages transmitted to this peer. |
| txRedrnResp | long | tmnxMobSgwGaStatTxRedrnResp | The value of tmnxMobSgwGaStatTxRedrnResp indicates the number of redirection request messages transmitted to this peer. |
| unackDataRexReqs | long | tmnxMobSgwGaStatUnackDataRexReqs | The value of tmnxMobSgwGaStatUnackDataRexReqs indicates the number of Data record transfer requests unacknowledged by this peer. |
| upTime | long | tmnxMobSgwGaStatUpTime | The value of tmnxMobSgwGaStatUpTime indicates the time when the connection comes up. |
| virtualRouterId | int | vRtrID | — |

**(12 of 12)**

### Table A-28 lteli statistics

| 5620 SAM counter name | Type | MIB counter name | Description |
|---|---|---|---|
| **DFPeerStat**<br>MIB table name: TIMETRA-MOBILE-GATEWAY-MIB.tmnxMobLiDfPeerTable<br>Monitored class: lteli.DFPeer | | | |
| df2TxPackets | long | tmnxMobLiDf2PeerPktsTx | The value of tmnxMobLiDf2PeerPktsTx indicates the number of packets transmitted to the Delivery Function 2 peer. |
| peerId | int | tmnxMobLiDfPeer | The value of tmnxMobLiDfPeer uniquely identifies a Delivery Function (DF) peer configured for Lawful Interception (LI) in the system. |

**Table A-29 mld statistics**

| 5620 SAM counter name | Type | MIB counter name | Description |
|---|---|---|---|
| **InterfaceStats**<br>MIB table name: TIMETRA-MLD-MIB.vRtrMldIfStatsTable<br>Monitored class: mld.Interface | | | |
| importPolicyDrops | long | vRtrMldIfImportPolicyDrops | The value of vRtrMldIfImportPolicyDrops indicates the total number of times the MLD protocol instance matched the host IP address or group or source addresses specified in the import policy vRtrMldIfImportPolicy. |
| rxBadChecksumPkts | long | vRtrMldIfRxBadChecksumPkts | The value of vRtrMldIfRxBadChecksumPkts indicates the total number of MLD packets with bad checksum received on this interface. |
| rxBadEncodings | long | vRtrMldIfRxBadEncodings | The value of vRtrMldIfRxBadEncodings indicates the total number of MLD packets received on this interface which were not encoded correctly. |
| rxBadLenPkts | long | vRtrMldIfRxBadLenPkts | The value of vRtrMldIfRxBadLenPkts indicates the total number of MLD packets with bad length received on this interface. |
| rxBadReceiveIfPkts | long | vRtrMldIfRxBadReceiveIfPkts | The value of vRtrMldIfRxBadReceiveIfPkts indicates the total number of MLD packets incorrectly received on this interface. |
| rxGenQueries | long | vRtrMldIfRxGenQueries | The value of vRtrMldIfRxGenQueries indicates the total number of MLD General Queries received on this interface. |
| rxGrpQueries | long | vRtrMldIfRxGrpQueries | The value of vRtrMldIfRxGrpQueries indicates the number of MLD Group Specific Queries received on this interface. |
| rxGrpSrcQueries | long | vRtrMldIfRxGrpSrcQueries | The value of vRtrMldIfRxGrpSrcQueries indicates the number of MLD Group and Source Specific Queries received on this interface. |
| rxLeaves | long | vRtrMldIfRxLeaves | The value of vRtrMldIfRxLeaves indicates the total number of MLD V2 Leaves received on this interface. |
| rxLocalScopePkts | long | vRtrMldIfRxLocalScopePkts | The value of the object vRtrMldIfRxLocalScopePkts indicates the number of MLD packets received on the link-local scope IPv6 multicast address. |
| rxNonLocal | long | vRtrMldIfRxNonLocal | The value of vRtrMldIfRxNonLocal indicates the total number of MLD packets received from a non-local sender. |
| rxNoRtrAlertPkts | long | vRtrMldIfRxNoRtrAlertPkts | The value of vRtrMldIfRxNoRtrAlertPkts indicates the total number of MLDv3 packets received on this interface which did not have the router alert flag set. |

**(1 of 3)**

| 5620 SAM counter name | Type | MIB counter name | Description |
|---|---|---|---|
| rxPktDrops | long | vRtrMldIfRxPktDrops | The value of vRtrMldIfRxPktDrops indicates the total number of MLD packets that were received on this interface but were dropped. |
| rxRsvdScopePkts | long | vRtrMldIfRxRsvdScopePkts | The value of the object vRtrMldIfRxRsvdScopePkts indicates the number of MLD packets received on the reserved scope IPv6 multicast address. |
| rxUnknownTypePkts | long | vRtrMldIfRxUnknownTypePkts | The value of vRtrMldIfRxUnknownTypePkts indicates the total number of MLD packets with unknown type received on this interface. |
| rxV1Reports | long | vRtrMldIfRxV1Reports | The value of vRtrMldIfRxV1Reports indicates the total number of MLD V1 Reports received on this interface. |
| rxV2Reports | long | vRtrMldIfRxV2Reports | The value of vRtrMldIfRxV2Reports indicates the total number of MLD V2 Reports received on this interface. |
| rxWrongVersions | long | vRtrMldIfRxWrongVersions | The value of vRtrMldIfRxWrongVersions indicates the total number of MLD packets with wrong versions received on this interface. |
| statsSGTypes | long | vRtrMldIfStatsSGTypes | The value of vRtrMldIfStatsSGTypes indicates the number of entries on this interface for which the source type is 'sg'. |
| statsStarGTypes | long | vRtrMldIfStatsStarGTypes | vRtrMldIfStatsStarGTypes indicates the number of entries on this interface for which the source type is 'starG'. |
| txErrors | long | vRtrMldIfTxErrors | The value of vRtrMldIfTxErrors indicates the total number of times there was an error transmitting the MLD packets on this interface. |
| txGenQueries | long | vRtrMldIfTxGenQueries | The value of vRtrMldIfTxGenQueries indicates the number of MLD General Queries transmitted on this interface. |
| txGrpQueries | long | vRtrMldIfTxGrpQueries | The value of vRtrMldIfTxGrpQueries indicates the number of MLD Group Specific Queries transmitted on this interface. |
| txGrpSrcQueries | long | vRtrMldIfTxGrpSrcQueries | The value of vRtrMldIfTxGrpSrcQueries indicates the number of MLD Group and Source Specific Queries transmitted on this interface. |
| txLeaves | long | vRtrMldIfTxLeaves | The value of vRtrMldIfTxLeaves indicates the total number of MLD Leaves transmitted on this interface. |
| txV1Reports | long | vRtrMldIfTxV1Reports | The value of vRtrMldIfTxV1Reports indicates the total number of MLD V1 Reports transmitted on this interface. |
| txV2Reports | long | vRtrMldIfTxV2Reports | The value of vRtrMldIfTxV2Reports indicates the total number of MLD V2 Reports transmitted on this interface. |

**(2 of 3)**

| 5620 SAM counter name | Type | MIB counter name | Description |
|---|---|---|---|
| **SiteStats**<br>MIB table name: TIMETRA-MLD-MIB.vRtrMldGenStatsTable<br>Monitored class: mld.Site | | | |
| statsSGTypes | long | vRtrMldGenStatsSGTypes | The value of vRtrMldGenStatsSGTypes indicates the number of entries in vRtrMldGrpSrcTable for which the source type is 'sg'. |
| statsStarGTypes | long | vRtrMldGenStatsStarGTypes | The value of vRtrMldGenStatsStarGTypes indicates the number of entries in vRtrMldGrpSrcTable for which the source type is 'starG'. |

**(3 of 3)**

### Table A-30 mpls statistics

| 5620 SAM counter name | Type | MIB counter name | Description |
|---|---|---|---|
| **DynamicLspStats**<br>MIB table name: TIMETRA-MPLS-MIB.vRtrMplsLspStatTable<br>Monitored class: mpls.DynamicLsp | | | |
| configuredPaths | long | vRtrMplsLspConfiguredPaths | The number of paths configured for this LSP. |
| operationalPaths | long | vRtrMplsLspOperationalPaths | The number of operational paths for this LSP. This includes the path currently active, as well as operational standby paths. |
| pathChanges | long | vRtrMplsLspPathChanges | The number of path changes this LSP has had. For every path change (path down, path up, path change), a corresponding syslog/trap (if enabled) is generated for it. |
| standbyPaths | long | vRtrMplsLspStandbyPaths | The number of standby paths configured for this LSP. |
| timeSinceLastPathChange | long | vRtrMplsLspLastPathChange | The time in 10-millisecond units since the last change occurred on this LSP. |
| timeSinceLastPrimaryUpState | long | vRtrMplsLspPrimaryTimeUp | The total time in 10-millisecond units that this LSP's primary path has been operational. For example, the percentage contribution of the primary path to the operational time is given by (vRtrMplsLspPrimaryTimeUp/vRtrMplsLspTimeUp * 100) . |
| **LspPathStats**<br>MIB table name: TIMETRA-MPLS-MIB.vRtrMplsLspPathStatTable<br>Monitored class: mpls.LspPath | | | |
| cspfQueries | long | vRtrMplsLspPathCspfQueries | The value of vRtrMplsLspPathCspfQueries specifies the number of CSPF queries that have been made for this LSP path. |

**(1 of 9)**

| 5620 SAM counter name | Type | MIB counter name | Description |
|---|---|---|---|
| retryAttempts | long | vRtrMplsLspPathRetryAttempts | The number of unsuccessful attempts which have been made to signal this path. As soon as the path gets signalled, this is set to 0. |
| timeDown | long | vRtrMplsLspPathTimeDown | The total time in 10-millisecond units that this LSP Path has not been operational. |
| timeUp | long | vRtrMplsLspPathTimeUp | The total time in 10-millisecond units that this LSP path has been operational. For example, the percentage up time can be determined by computing (vRtrMplsLspPathTimeUp/vRtrMplsLspAge * 100 ). |
| transitionCount | long | vRtrMplsLspPathTransitionCount | The object vRtrMplsLspPathTransitionCount maintains the number of transitions that have occurred for this LSP. |
| **LspStats**<br>MIB table name: TIMETRA-MPLS-MIB.vRtrMplsLspStatTable<br>Monitored classes:<br>• mpls.DynamicLsp<br>• mpls.StaticLsp<br>• mpls.BypassOnlyLsp | | | |
| age | long | vRtrMplsLspAge | The age (i.e., time from creation till now) of this LSP in 10-millisecond periods. |
| timeSinceLastDownState | long | vRtrMplsLspTimeDown | The total time in 10-millisecond units that this LSP has not been operational. |
| timeSinceLastTransition | long | vRtrMplsLspLastTransition | The time in 10-millisecond units since the last transition occurred on this LSP. |
| timeSinceLastUpState | long | vRtrMplsLspTimeUp | The total time in 10-millisecond units that this LSP has been been operational. For example, the percentage up time can be determined by computing (vRtrMplsLspTimeUp/vRtrMplsLspAge * 100 ). |
| transitions | long | vRtrMplsLspTransitions | The number of state transitions (up -> down and down -> up) this LSP has undergone. |
| **MplsInterfaceStats**<br>MIB table name: TIMETRA-MPLS-MIB.vRtrMplsIfStatTable<br>Monitored class: mpls.Interface | | | |
| receiveOctets | UINT128 | vRtrMplsIfRxOctetCount | The total number of bytes in MPLS labeled packets received on this interface. |
| receivePackets | UINT128 | vRtrMplsIfRxPktCount | The total number of MPLS labeled packets received on this interface. |
| transmitOctets | UINT128 | vRtrMplsIfTxOctetCount | The total number of bytes in MPLS labeled packets transmitted on this interface. |
| transmitPackets | UINT128 | vRtrMplsIfTxPktCount | The total number of MPLS labeled packets transmitted from this interface. |

**(2 of 9)**

| 5620 SAM counter name | Type | MIB counter name | Description |
|---|---|---|---|
| **MplsLspEgressStats**<br>MIB table name: TIMETRA-MPLS-MIB.vRtrMplsLspStatisticsTable<br>Monitored class: mpls.DynamicLsp | | | |
| mplsInProfileOctetsFc0 | UINT128 | vRtrMplsInProfileOctetsFc0 | The value of vRtrMplsInProfileOctetsFc0 indicates the number of in profile octets received for Forwarding Class 0. |
| mplsInProfileOctetsFc1 | UINT128 | vRtrMplsInProfileOctetsFc1 | The value of vRtrMplsInProfileOctetsFc1 indicates the number of in profile octets received for Forwarding Class 1. |
| mplsInProfileOctetsFc2 | UINT128 | vRtrMplsInProfileOctetsFc2 | The value of vRtrMplsInProfileOctetsFc2 indicates the number of in profile octets received for Forwarding Class 2. |
| mplsInProfileOctetsFc3 | UINT128 | vRtrMplsInProfileOctetsFc3 | The value of vRtrMplsInProfileOctetsFc3 indicates the number of in profile octets received for Forwarding Class 3. |
| mplsInProfileOctetsFc4 | UINT128 | vRtrMplsInProfileOctetsFc4 | The value of vRtrMplsInProfileOctetsFc4 indicates the number of in profile octets received for Forwarding Class 4. |
| mplsInProfileOctetsFc5 | UINT128 | vRtrMplsInProfileOctetsFc5 | The value of vRtrMplsInProfileOctetsFc5 indicates the number of in profile octets received for Forwarding Class 5. |
| mplsInProfileOctetsFc6 | UINT128 | vRtrMplsInProfileOctetsFc6 | The value of vRtrMplsInProfileOctetsFc6 indicates the number of in profile octets received for Forwarding Class 6. |
| mplsInProfileOctetsFc7 | UINT128 | vRtrMplsInProfileOctetsFc7 | The value of vRtrMplsInProfileOctetsFc7 indicates the number of in profile octets received for Forwarding Class 7. |
| mplsInProfilePktsFc0 | UINT128 | vRtrMplsInProfilePktsFc0 | The value of vRtrMplsInProfilePktsFc0 indicates the number of in profile packets received for Forwarding Class 0. |
| mplsInProfilePktsFc1 | UINT128 | vRtrMplsInProfilePktsFc1 | The value of vRtrMplsInProfilePktsFc1 indicates the number of in profile packets received for Forwarding Class 1. |
| mplsInProfilePktsFc2 | UINT128 | vRtrMplsInProfilePktsFc2 | The value of vRtrMplsInProfilePktsFc2 indicates the number of in profile packets received for Forwarding Class 2. |
| mplsInProfilePktsFc3 | UINT128 | vRtrMplsInProfilePktsFc3 | The value of vRtrMplsInProfilePktsFc3 indicates the number of in profile packets received for Forwarding Class 3. |
| mplsInProfilePktsFc4 | UINT128 | vRtrMplsInProfilePktsFc4 | The value of vRtrMplsInProfilePktsFc4 indicates the number of in profile packets received for Forwarding Class 4. |
| mplsInProfilePktsFc5 | UINT128 | vRtrMplsInProfilePktsFc5 | The value of vRtrMplsInProfilePktsFc5 indicates the number of in profile packets received for Forwarding Class 5. |
| mplsInProfilePktsFc6 | UINT128 | vRtrMplsInProfilePktsFc6 | The value of vRtrMplsInProfilePktsFc6 indicates the number of in profile packets received for Forwarding Class 6. |
| mplsInProfilePktsFc7 | UINT128 | vRtrMplsInProfilePktsFc7 | The value of vRtrMplsInProfilePktsFc7 indicates the number of in profile packets received for Forwarding Class 7. |

**(3 of 9)**

| 5620 SAM counter name | Type | MIB counter name | Description |
|---|---|---|---|
| mplsOutOfProfOctetsFc0 | UINT128 | vRtrMplsOutOfProfOctetsFc0 | The value of vRtrMplsOutOfProfOctetsFc0 indicates the number of out of profile octets received for Forwarding Class 0. |
| mplsOutOfProfOctetsFc1 | UINT128 | vRtrMplsOutOfProfOctetsFc1 | The value of vRtrMplsOutOfProfOctetsFc1 indicates the number of out of profile octets received for Forwarding Class 1. |
| mplsOutOfProfOctetsFc2 | UINT128 | vRtrMplsOutOfProfOctetsFc2 | The value of vRtrMplsOutOfProfOctetsFc2 indicates the number of out of profile octets received for Forwarding Class 2. |
| mplsOutOfProfOctetsFc3 | UINT128 | vRtrMplsOutOfProfOctetsFc3 | The value of vRtrMplsOutOfProfOctetsFc3 indicates the number of out of profile octets received for Forwarding Class 3. |
| mplsOutOfProfOctetsFc4 | UINT128 | vRtrMplsOutOfProfOctetsFc4 | The value of vRtrMplsOutOfProfOctetsFc4 indicates the number of out of profile octets received for Forwarding Class 4. |
| mplsOutOfProfOctetsFc5 | UINT128 | vRtrMplsOutOfProfOctetsFc5 | The value of vRtrMplsOutOfProfOctetsFc5 indicates the number of out of profile octets received for Forwarding Class 5. |
| mplsOutOfProfOctetsFc6 | UINT128 | vRtrMplsOutOfProfOctetsFc6 | The value of vRtrMplsOutOfProfOctetsFc6 indicates the number of out of profile octets received for Forwarding Class 6. |
| mplsOutOfProfOctetsFc7 | UINT128 | vRtrMplsOutOfProfOctetsFc7 | The value of vRtrMplsOutOfProfOctetsFc7 indicates the number of out of profile octets received for Forwarding Class 7. |
| mplsOutOfProfPktsFc0 | UINT128 | vRtrMplsOutOfProfPktsFc0 | The value of vRtrMplsOutOfProfPktsFc0 indicates the number of out of profile packets received for Forwarding Class 0. |
| mplsOutOfProfPktsFc1 | UINT128 | vRtrMplsOutOfProfPktsFc1 | The value of vRtrMplsOutOfProfPktsFc1 indicates the number of out of profile packets received for Forwarding Class 1. |
| mplsOutOfProfPktsFc2 | UINT128 | vRtrMplsOutOfProfPktsFc2 | The value of vRtrMplsOutOfProfPktsFc2 indicates the number of out of profile packets received for Forwarding Class 2. |
| mplsOutOfProfPktsFc3 | UINT128 | vRtrMplsOutOfProfPktsFc3 | The value of vRtrMplsOutOfProfPktsFc3 indicates the number of out of profile packets received for Forwarding Class 3. |
| mplsOutOfProfPktsFc4 | UINT128 | vRtrMplsOutOfProfPktsFc4 | The value of vRtrMplsOutOfProfPktsFc4 indicates the number of out of profile packets received for Forwarding Class 4. |
| mplsOutOfProfPktsFc5 | UINT128 | vRtrMplsOutOfProfPktsFc5 | The value of vRtrMplsOutOfProfPktsFc5 indicates the number of out of profile packets received for Forwarding Class 5. |
| mplsOutOfProfPktsFc6 | UINT128 | vRtrMplsOutOfProfPktsFc6 | The value of vRtrMplsOutOfProfPktsFc6 indicates the number of out of profile packets received for Forwarding Class 6. |
| mplsOutOfProfPktsFc7 | UINT128 | vRtrMplsOutOfProfPktsFc7 | The value of vRtrMplsOutOfProfPktsFc7 indicates the number of out of profile packets received for Forwarding Class 7. |
| psbMatch | boolean | vRtrMplsLspStatsPSBMatch | The value of vRtrMplsLspStatsPSBMatch indicates if a path state block (PSB) match was made against this LSP name. |

**(4 of 9)**

| 5620 SAM counter name | Type | MIB counter name | Description |
|---|---|---|---|
| **MplsLspIngressStats**<br>MIB table name: TIMETRA-MPLS-MIB.vRtrMplsLspStatisticsTable<br>Monitored class: mpls.IngStatsPolicy | | | |
| mplsInProfileOctetsFc0 | UINT128 | vRtrMplsInProfileOctetsFc0 | The value of vRtrMplsInProfileOctetsFc0 indicates the number of in profile octets received for Forwarding Class 0. |
| mplsInProfileOctetsFc1 | UINT128 | vRtrMplsInProfileOctetsFc1 | The value of vRtrMplsInProfileOctetsFc1 indicates the number of in profile octets received for Forwarding Class 1. |
| mplsInProfileOctetsFc2 | UINT128 | vRtrMplsInProfileOctetsFc2 | The value of vRtrMplsInProfileOctetsFc2 indicates the number of in profile octets received for Forwarding Class 2. |
| mplsInProfileOctetsFc3 | UINT128 | vRtrMplsInProfileOctetsFc3 | The value of vRtrMplsInProfileOctetsFc3 indicates the number of in profile octets received for Forwarding Class 3. |
| mplsInProfileOctetsFc4 | UINT128 | vRtrMplsInProfileOctetsFc4 | The value of vRtrMplsInProfileOctetsFc4 indicates the number of in profile octets received for Forwarding Class 4. |
| mplsInProfileOctetsFc5 | UINT128 | vRtrMplsInProfileOctetsFc5 | The value of vRtrMplsInProfileOctetsFc5 indicates the number of in profile octets received for Forwarding Class 5. |
| mplsInProfileOctetsFc6 | UINT128 | vRtrMplsInProfileOctetsFc6 | The value of vRtrMplsInProfileOctetsFc6 indicates the number of in profile octets received for Forwarding Class 6. |
| mplsInProfileOctetsFc7 | UINT128 | vRtrMplsInProfileOctetsFc7 | The value of vRtrMplsInProfileOctetsFc7 indicates the number of in profile octets received for Forwarding Class 7. |
| mplsInProfilePktsFc0 | UINT128 | vRtrMplsInProfilePktsFc0 | The value of vRtrMplsInProfilePktsFc0 indicates the number of in profile packets received for Forwarding Class 0. |
| mplsInProfilePktsFc1 | UINT128 | vRtrMplsInProfilePktsFc1 | The value of vRtrMplsInProfilePktsFc1 indicates the number of in profile packets received for Forwarding Class 1. |
| mplsInProfilePktsFc2 | UINT128 | vRtrMplsInProfilePktsFc2 | The value of vRtrMplsInProfilePktsFc2 indicates the number of in profile packets received for Forwarding Class 2. |
| mplsInProfilePktsFc3 | UINT128 | vRtrMplsInProfilePktsFc3 | The value of vRtrMplsInProfilePktsFc3 indicates the number of in profile packets received for Forwarding Class 3. |
| mplsInProfilePktsFc4 | UINT128 | vRtrMplsInProfilePktsFc4 | The value of vRtrMplsInProfilePktsFc4 indicates the number of in profile packets received for Forwarding Class 4. |
| mplsInProfilePktsFc5 | UINT128 | vRtrMplsInProfilePktsFc5 | The value of vRtrMplsInProfilePktsFc5 indicates the number of in profile packets received for Forwarding Class 5. |
| mplsInProfilePktsFc6 | UINT128 | vRtrMplsInProfilePktsFc6 | The value of vRtrMplsInProfilePktsFc6 indicates the number of in profile packets received for Forwarding Class 6. |
| mplsInProfilePktsFc7 | UINT128 | vRtrMplsInProfilePktsFc7 | The value of vRtrMplsInProfilePktsFc7 indicates the number of in profile packets received for Forwarding Class 7. |

**(5 of 9)**

| 5620 SAM counter name | Type | MIB counter name | Description |
|---|---|---|---|
| mplsOutOfProfOctetsFc0 | UINT128 | vRtrMplsOutOfProfOctetsFc0 | The value of vRtrMplsOutOfProfOctetsFc0 indicates the number of out of profile octets received for Forwarding Class 0. |
| mplsOutOfProfOctetsFc1 | UINT128 | vRtrMplsOutOfProfOctetsFc1 | The value of vRtrMplsOutOfProfOctetsFc1 indicates the number of out of profile octets received for Forwarding Class 1. |
| mplsOutOfProfOctetsFc2 | UINT128 | vRtrMplsOutOfProfOctetsFc2 | The value of vRtrMplsOutOfProfOctetsFc2 indicates the number of out of profile octets received for Forwarding Class 2. |
| mplsOutOfProfOctetsFc3 | UINT128 | vRtrMplsOutOfProfOctetsFc3 | The value of vRtrMplsOutOfProfOctetsFc3 indicates the number of out of profile octets received for Forwarding Class 3. |
| mplsOutOfProfOctetsFc4 | UINT128 | vRtrMplsOutOfProfOctetsFc4 | The value of vRtrMplsOutOfProfOctetsFc4 indicates the number of out of profile octets received for Forwarding Class 4. |
| mplsOutOfProfOctetsFc5 | UINT128 | vRtrMplsOutOfProfOctetsFc5 | The value of vRtrMplsOutOfProfOctetsFc5 indicates the number of out of profile octets received for Forwarding Class 5. |
| mplsOutOfProfOctetsFc6 | UINT128 | vRtrMplsOutOfProfOctetsFc6 | The value of vRtrMplsOutOfProfOctetsFc6 indicates the number of out of profile octets received for Forwarding Class 6. |
| mplsOutOfProfOctetsFc7 | UINT128 | vRtrMplsOutOfProfOctetsFc7 | The value of vRtrMplsOutOfProfOctetsFc7 indicates the number of out of profile octets received for Forwarding Class 7. |
| mplsOutOfProfPktsFc0 | UINT128 | vRtrMplsOutOfProfPktsFc0 | The value of vRtrMplsOutOfProfPktsFc0 indicates the number of out of profile packets received for Forwarding Class 0. |
| mplsOutOfProfPktsFc1 | UINT128 | vRtrMplsOutOfProfPktsFc1 | The value of vRtrMplsOutOfProfPktsFc1 indicates the number of out of profile packets received for Forwarding Class 1. |
| mplsOutOfProfPktsFc2 | UINT128 | vRtrMplsOutOfProfPktsFc2 | The value of vRtrMplsOutOfProfPktsFc2 indicates the number of out of profile packets received for Forwarding Class 2. |
| mplsOutOfProfPktsFc3 | UINT128 | vRtrMplsOutOfProfPktsFc3 | The value of vRtrMplsOutOfProfPktsFc3 indicates the number of out of profile packets received for Forwarding Class 3. |
| mplsOutOfProfPktsFc4 | UINT128 | vRtrMplsOutOfProfPktsFc4 | The value of vRtrMplsOutOfProfPktsFc4 indicates the number of out of profile packets received for Forwarding Class 4. |
| mplsOutOfProfPktsFc5 | UINT128 | vRtrMplsOutOfProfPktsFc5 | The value of vRtrMplsOutOfProfPktsFc5 indicates the number of out of profile packets received for Forwarding Class 5. |
| mplsOutOfProfPktsFc6 | UINT128 | vRtrMplsOutOfProfPktsFc6 | The value of vRtrMplsOutOfProfPktsFc6 indicates the number of out of profile packets received for Forwarding Class 6. |
| mplsOutOfProfPktsFc7 | UINT128 | vRtrMplsOutOfProfPktsFc7 | The value of vRtrMplsOutOfProfPktsFc7 indicates the number of out of profile packets received for Forwarding Class 7. |
| psbMatch | boolean | vRtrMplsLspStatsPSBMatch | The value of vRtrMplsLspStatsPSBMatch indicates if a path state block (PSB) match was made against this LSP name. |

**(6 of 9)**

| 5620 SAM counter name | Type | MIB counter name | Description |
|---|---|---|---|
| **P2MPInstanceStats**<br>MIB table name: TIMETRA-MPLS-MIB.vRtrMplsP2mpInstStatTable<br>Monitored class: mpls.P2MPInstance | | | |
| configuredS2ls | long | vRtrMplsP2mpInstStatConfiguredS2ls | The value of vRtrMplsP2mpInstStatConfiguredS2ls indicates the number of S2ls configured for this P2MP LSP. |
| lastS2lChange | long | vRtrMplsP2mpInstStatLastS2lChange | The value of vRtrMplsP2mpInstStatLastS2lChange indicates the time since the last change occurred on this P2MP LSP. |
| lastS2lTimeDown | long | vRtrMplsP2mpInstStatLastS2lTimeDown | The value of vRtrMplsP2mpInstStatLastS2lTimeDown indicates the total time that this S2l has not been operational. |
| lastTrans | long | vRtrMplsP2mpInstStatLastTrans | The value of vRtrMplsP2mpInstStatLastTrans indicates the time since the last transition occurred on this P2mp instance. |
| operationalS2ls | long | vRtrMplsP2mpInstStatOperationalS2ls | The value of vRtrMplsP2mpInstStatOperationalS2ls indicates the number of operational S2ls for this P2MP LSP. This includes the S2ls currently active. |
| s2lChanges | long | vRtrMplsP2mpInstStatS2lChanges | The value of vRtrMplsP2mpInstStatS2lChanges indicates the number of S2l changes this P2MP LSP has had. For every S2l change (S2l down, S2l up, S2l change), a corresponding syslog/trap (if enabled) is generated for it. |
| s2lTimeUp | long | vRtrMplsP2mpInstStatLastS2lTimeUp | The value of vRtrMplsP2mpInstStatLastS2lTimeUp indicates the total time that this S2l has been operational. |
| timeDown | long | vRtrMplsP2mpInstStatTimeDown | The value of vRtrMplsP2mpInstStatTimeDown indicates the total time that this P2MP instance has not been operational. |
| timeUp | long | vRtrMplsP2mpInstStatTimeUp | The value of vRtrMplsP2mpInstStatTimeUp indicates the total time that this P2MP instance has been operational. |
| transitions | long | vRtrMplsP2mpInstStatTransitions | The The value of vRtrMplsP2mpInstStatTransitions indicates the number of state transitions (up -> down and down -> up) this P2mp instance has undergone. |
| **S2LPathStats**<br>MIB table name: TIMETRA-MPLS-MIB.vRtrMplsS2lSubLspStatTable<br>Monitored class: mpls.S2LPath | | | |

**(7 of 9)**

| 5620 SAM counter name | Type | MIB counter name | Description |
|---|---|---|---|
| cspfQueries | long | vRtrMplsS2lSubLspCspfQueries | The value of vRtrMplsS2lSubLspCspfQueries indicates the number of CSPF queries that have been made for this LSP S2l. |
| retryAttempts | long | vRtrMplsS2lSubLspRetryAttempts | The value of vRtrMplsS2lSubLspRetryAttempts indicates the number of unsuccessful attempts which have been made to signal this S2l. As soon as the S2l gets signalled, this is set to 0. |
| timeDown | long | vRtrMplsS2lSubLspTimeDown | The value of vRtrMplsS2lSubLspTimeUp indicates the total time that this LSP S2l has not been operational. |
| timeUp | long | vRtrMplsS2lSubLspTimeUp | The value of vRtrMplsS2lSubLspTimeUp indicates the total time that this LSP S2l has been operational. For example, the percentage up time can be determined by computing (vRtrMplsS2lSubLspTimeUp/vRtrMplsLspAge * 100 ). |
| transitionCount | long | vRtrMplsS2lSubLspTransitionCount | The value of vRtrMplsS2lSubLspTransitionCount indicates the number of transitions that have occurred for this LSP. |
| **SiteStats**<br>MIB table name: TIMETRA-MPLS-MIB.vRtrMplsGeneralStatTable<br>Monitored class: mpls.Site | | | |
| detourOriginate | long | vRtrMplsGeneralDetourLspOriginate | The value of vRtrMplsGeneralDetourLspOriginate indicates the number of detour LSPs that originate at this virtual router. |
| detourTerminate | long | vRtrMplsGeneralDetourLspTerminate | The value of vRtrMplsGeneralDetourLspTerminate indicates the number of detour LSPs that terminate at this virtual router. |
| detourTransit | long | vRtrMplsGeneralDetourLspTransit | The value of vRtrMplsGeneralDetourLspTransit indicates the number of detour LSPs that transit through this virtual router. |
| dynamicOriginate | long | vRtrMplsGeneralDynamicLspOriginate | The value of vRtrMplsGeneralDynamicLspOriginate indicates the number of dynamic LSPs that originate at this virtual router. |
| dynamicTerminate | long | vRtrMplsGeneralDynamicLspTerminate | The value of vRtrMplsGeneralDynamicLspTerminate indicates the number of dynamic LSPs that terminate at this virtual router. |
| dynamicTransit | long | vRtrMplsGeneralDynamicLspTransit | The value of vRtrMplsGeneralDynamicLspTransit indicates the number of dynamic LSPs that transit through this virtual router. |
| staticOriginate | long | vRtrMplsGeneralStaticLspOriginate | The value of vRtrMplsGeneralStaticLspOriginate indicates the number of static LSPs that originate at this virtual router. |

**(8 of 9)**

| 5620 SAM counter name | Type | MIB counter name | Description |
|---|---|---|---|
| staticTerminate | long | vRtrMplsGeneralStaticLsp Terminate | The value of vRtrMplsGeneralStaticLspTerminate indicates the number of static LSPs that terminate at this virtual router. |
| staticTransit | long | vRtrMplsGeneralStaticLsp Transit | The value of vRtrMplsGeneralStaticLspTransit indicates the number of static LSPs that transit through this virtual router. |

**(9 of 9)**

### Table A-31 msdp statistics

| 5620 SAM counter name | Type | MIB counter name | Description |
|---|---|---|---|
| **PeerStats**<br>MIB table name: TIMETRA-MSDP-MIB.tmnxMsdpPeerStatsTable<br>Monitored classes:<br>• msdp.Peer<br>• msdp.GroupPeer | | | |
| errorMsgsReceived | long | tmnxMsdpPeerStatsError MsgsRecvd | The value of tmnxMsdpPeerStatsErrorMsgsRecvd indicates number of error messages received. |
| keepAliveMsgsReceived | long | tmnxMsdpPeerStatsKAMsg sRecvd | The value of tmnxMsdpPeerStatsKAMsgsRecvd indicates the number of keep-alive messages received. |
| keepAliveMsgsSent | long | tmnxMsdpPeerStatsKAMsg sSent | The value of tmnxMsdpPeerStatsKAMsgsSent indicates the number of keep-alive messages sent. |
| lastMsgPeer | long | tmnxMsdpPeerStatsLastM sgPeer | The value of tmnxMsdpPeerStatsLastMsgPeer indicates how long ago the last message was received from this peer instance. |
| lastStateChange | long | tmnxMsdpPeerStatsLastSt Change | The value of tmnxMsdpPeerStatsLastStChange indicates how long ago the peer state changed. |
| peerTimeouts | long | tmnxMsdpPeerStatsPeerT imeouts | The value of tmnxMsdpPeerStatsPeerTimeouts indicates the number of peer timeouts. |
| remoteCloses | long | tmnxMsdpPeerStatsRemo teCloses | The value of tmnxMsdpPeerStatsRemoteCloses indicates the number of times the remote peer closed. |
| reservedMsgsReceived | long | tmnxMsdpPeerStatsResvM sgsRecvd | The value of tmnxMsdpPeerStatsResvMsgsRecvd indicates the number of MSDP messages received with type 'Reserved'. |
| rpfFailures | long | tmnxMsdpPeerStatsRPFFa ilures | The value of tmnxMsdpPeerStatsRPFFailures indicates number of reverse path forwarding (RPF) failures. |

**(1 of 2)**

| 5620 SAM counter name | Type | MIB counter name | Description |
|---|---|---|---|
| saLearned | long | tmnxMsdpPeerStatsSALearnt | The value of tmnxMsdpPeerStatsSALearnt indicates the number of unique source active entries in the cache learned from the peer. |
| saLimitExceeded | long | tmnxMsdpPeerStatsActSrcLimExcd | The value of tmnxMsdpPeerStatsActSrcLimExcd indicates the number of times the global active source limit has been exceeded by this peer instance. |
| saMsgsReceived | long | tmnxMsdpPeerStatsSAMsgsRecvd | The value of tmnxMsdpPeerStatsSAMsgsRecvd indicates the number of source-active messages received. |
| saMsgsSent | long | tmnxMsdpPeerStatsSAMsgsSent | The value of tmnxMsdpPeerStatsSAMsgsSent indicates the number of source-active messages sent. |
| saRejectExportPolicy | long | tmnxMsdpPeerStatsSARejImpPolicy | The value of tmnxMsdpPeerStatsSARejImpPolicy indicates the number of source active messages from the peer that were rejected due to import policy. |
| saRejectImportPolicy | long | tmnxMsdpPeerStatsSARejExpPolicy | The value of tmnxMsdpPeerStatsSARejExpPolicy indicates the number of source active messages from the peer that were not sent due to export policy. |
| saRequestMsgsReceived | long | tmnxMsdpPeerStatsSAReqMsgsRecvd | The value of tmnxMsdpPeerStatsSAReqMsgsRecvd indicates the number of source-active request messages received. |
| saRequestMsgsSent | long | tmnxMsdpPeerStatsSAReqMsgsSent | The value of tmnxMsdpPeerStatsSAReqMsgsSent indicates the number of source-active request messages sent. |
| saResponseMsgsReceived | long | tmnxMsdpPeerStatsSAResMsgsRecvd | The value of tmnxMsdpPeerStatsSAResMsgsRecvd indicates the number of source-active response messages received. |
| saResponseMsgsSent | long | tmnxMsdpPeerStatsSAResMsgsSent | The value of tmnxMsdpPeerStatsSAResMsgsSent indicates the number of source-active response messages sent. |
| unknownMsgsReceived | long | tmnxMsdpPeerStatsUnknMsgsRecvd | The value of tmnxMsdpPeerStatsUnknMsgsRecvd indicates the number of unknown messages received. |

**(2 of 2)**

**Table A-32 multicast statistics**

| 5620 SAM counter name | Type | MIB counter name | Description |
|---|---|---|---|
| **McastCacChannelServiceStats**<br>MIB table name: TIMETRA-MCAST-CAC-MIB.tmnxMcacServStatsTable<br>Monitored class: multicast.McastCacPolicy | | | |
| action | int | tmnxMcacServStatsAction | The value of tmnxMcacServStatsAction indicates the action specified by the mcac policy for the service application to act upon. |
| algorithmReapply | boolean | tmnxMcacServStatsAlgoReapply | The value of tmnxMcacServStatsAlgoReapply indicates if the mcac policy was reapplied on the already accepted channel due lag constraints or if this was the first request for this channel from the service application. |
| bundleAvailBw | long | tmnxMcacServStatsBundleAvailBW | The value of tmnxMcacServStatsBundleAvailBW indicates the available bundle bandwidth after the requested channel was either accepted or discarded by the mcac policy. |
| channelBw | long | tmnxMcacServStatsChannelBW | The value of tmnxMcacServStatsChannelBW indicates the channel bandwidth configured at the mcac policy at the time of request from the service application. |
| channelRequestCount | long | tmnxMcacServStatsApplyAttempts | The value of tmnxMcacServStatsApplyAttempts indicates the number of times the mcac policy was applied for a particular channel entry by the service application. |
| channelType | int | tmnxMcacServStatsChannelType | The value of tmnxMcacServStatsChannelType indicates the channel type configured at the mcac policy at the time of request from the service application. |
| encapValueOrVCId | String | tmnxMcacServStatsEncapValue | The value of tmnxMcacServStatsEncapValue indicates the SAP/SDP Encap value of which the mcac policy is applied. |
| interfaceAvailBw | long | tmnxMcacServStatsIntfAvailBW | The value of tmnxMcacServStatsIntfAvailBW indicates the available interface bandwidth after the requested channel was either accepted or discarded by the mcac policy. |
| portIdOrTunnelId | String | tmnxMcacServStatsPortId | The value of tmnxMcacServStatsPortId indicates the port Id of the SAP/SDP on which the mcac policy is applied. |
| reason | int | tmnxMcacServStatsReason | The value of tmnxMcacServStatsReason indicates the reason for the action specified by the mcac policy for the service application to act upon. |

**(1 of 5)**

| 5620 SAM counter name | Type | MIB counter name | Description |
|---|---|---|---|
| timeStamp | long | tmnxMcacServStatsTimeStamp | The value of tmnxMcacServStatsTimeStamp indicates the timestamp of the last time the mcac policy was applied for this channel entry. |
| **McastCacChannelStats**<br>MIB table name: TIMETRA-MCAST-CAC-MIB.tmnxMcacStatsTable<br>Monitored class: multicast.McastCacPolicy | | | |
| action | int | tmnxMcacStatsAction | The value of tmnxMcacStatsAction indicates the action specified by the mcac policy for the application interface to act upon. |
| algorithmReapply | boolean | tmnxMcacStatsAlgoReapply | The value of tmnxMcacStatsAlgoReapply indicates if the mcac policy was reapplied on the already accepted channel due lag constraints or if this was the first request for this channel from the application. |
| bundleAvailBw | long | tmnxMcacStatsBundleAvailBW | The value of tmnxMcacStatsBundleAvailBW indicates the available bundle bandwidth after the requested channel was either accepted or discarded by the mcac policy. |
| bundleName | String | tmnxMcacStatsBundleName | The value of tmnxMcacStatsBundleName indicates the name of the multicast CAC policy bundle. The value of tmnxMcacStatsBundleName could be an empty string, meaning that this particular statistics entry's channel did not belong to any bundle in the policy. |
| channelAddress | String | tmnxMcacStatsChlAddr | The value of tmnxMcacStatsChlAddr indicates the address of the multicast channel that mcac policy was applied upon when requested by the application interface. Address type is indicated by tmnxMcacStatsChlAddrType. |
| channelAddressType | int | tmnxMcacStatsChlAddrType | The value of tmnxMcacStatsChlAddrType indicates the address type of tmnxMcacStatsChlAddr. |
| channelBw | long | tmnxMcacStatsChannelBW | The value of tmnxMcacStatsChannelBW indicates the channel bandwidth configured at the mcac policy at the time of request from the application interface. |
| channelRequestCount | long | tmnxMcacStatsApplyAttempts | The value of tmnxMcacStatsApplyAttempts indicates the number of times the mcac policy was applied for a particular channel entry by the application. |
| channelType | int | tmnxMcacStatsChannelType | The value of tmnxMcacStatsChannelType indicates the channel type configured at the mcac policy at the time of request from the application interface. |
| interfaceAvailBw | long | tmnxMcacStatsIntfAvailBW | The value of tmnxMcacStatsIntfAvailBW indicates the available interface bandwidth after the requested channel was either accepted or discarded by the mcac policy. |

**(2 of 5)**

| 5620 SAM counter name | Type | MIB counter name | Description |
|---|---|---|---|
| interfaceId | long | tmnxMcacStatsIfIndex | The value of tmnxMcacStatsIfIndex indicates the application interface index that has applied mcac policy. |
| protocolName | int | tmnxMcacStatsProtocolIndex | The value of tmnxMcacStatsProtocolIndex indicates the application that has applied mcac policy. |
| reason | int | tmnxMcacStatsReason | The value of tmnxMcacStatsReason indicates the reason for the action specified by the mcac policy for the application interface to act upon. |
| timeStamp | long | tmnxMcacStatsTimeStamp | The value of tmnxMcacStatsTimeStamp indicates the timestamp of the last time the mcac policy was applied for this channel entry. |
| **McastCacOper**<br>MIB table name: TIMETRA-MCAST-CAC-MIB.tmnxMcacOperTable<br>Monitored class: multicast.McastCacPolicy | | | |
| activeChannels | long | tmnxMcacOperActiveChannels | The value of tmnxMcacOperActiveChannels indicates the number of active channels for this entry. |
| availMandBw | long | tmnxMcacOperAvailMandBw | The value of tmnxMcacOperAvailMandBw indicates the operational pre-reserved bandwidth in kilo-bits per second(kbps) for the mandatory channels on the bundle for this protocol interface instance. |
| availOptionalBw | long | tmnxMcacOperAvailOptnlBw | The value of tmnxMcacOperAvailOptnlBw indicates the operational available bandwidth in kilo-bits per second(kbps) on the bundle for this protocol interface instance. |
| currConstrtLvl | long | tmnxMcacOperCurrConstrtLvl | The value of tmnxMcacOperCurrConstrtLvl indicates the current lag constraints bundle level id for the number of ports down (tmnxMcacOperPortsDown). This value is used to index the table tmnxMcacLevelTable to get the bundle level bandwidth. |
| inUseMandBw | long | tmnxMcacOperInUseMandBw | The value of tmnxMcacOperInUseMandBw indicates the operational in-use bandwidth in kilo-bits per second(kbps) for the mandatory channels on the bundle for this protocol interface instance. |
| inUseOptionalBw | long | tmnxMcacOperInUseOptnlBw | The value of tmnxMcacOperInUseOptnlBw indicates the operational in-use bandwidth in kilo-bits per second(kbps) for the optional channels on the bundle for this protocol interface instance. |
| maxBw | long | tmnxMcacOperMaxBw | The value of tmnxMcacOperMaxBw indicates the operational maximum bandwidth in kilo-bits per second(kbps) on the bundle for this protocol interface instance. |

**(3 of 5)**

| 5620 SAM counter name | Type | MIB counter name | Description |
|---|---|---|---|
| portsDown | long | tmnxMcacOperPortsDown | The value of tmnxMcacOperPortsDown indicates the the number of ports down on the application interface. This value is used to index the table tmnxMcacLagTable to get the bundle level id. |
| valuesInTransit | boolean | tmnxMcacOperValuesInTransit | The value of tmnxMcacOperValuesInTransit indicates that the operational (available and in-use mandatory/optional) value for the following objects are in transition due to configuration change: tmnxMcacOperAvailOptnlBw tmnxMcacOperAvailMandBw tmnxMcacOperInUseMandBw tmnxMcacOperInUseOptnlBw When Multicast CAC Policy is applied on the interface for the join of the next channel, the operational values will be recalculated and applied to the above objects and the value for tmnxMcacOperValuesInTransit will be set to 'false'. If the value of tmnxMcacOperValuesInTransit is 'true' then the values are in transition. |
| **McastCacServOperStats**<br>MIB table name: TIMETRA-MCAST-CAC-MIB.tmnxMcacServOperTable<br>Monitored class: multicast.McastCacPolicy | | | |
| activeChannels | long | tmnxMcacServOperActiveChannels | The value of tmnxMcacServOperActiveChannels indicates the number of active channels for this entry. |
| availMandBw | long | tmnxMcacServOperAvailMandBw | The value of tmnxMcacServOperAvailMandBw indicates the operational pre-reserved bandwidth in kilo-bits per second(kbps) for the mandatory channels on the bundle for this service application on sap/sdp instance. |
| availOptionalBw | long | tmnxMcacServOperAvailOptnlBw | The value of tmnxMcacServOperAvailOptnlBw indicates the operational available bandwidth in kilo-bits per second(kbps) on the bundle for this service application on sap/sdp instance. |
| currConstrtLvl | long | tmnxMcacServOperCurrConstrtLvl | The value of tmnxMcacServOperCurrConstrtLvl indicates the current lag constraints bundle level id for the number of ports down (tmnxMcacServOperPortsDown). This value is used to index the table tmnxMcacLevelTable to get the bundle level bandwidth. |
| inUseMandBw | long | tmnxMcacServOperInUseMandBw | The value of tmnxMcacServOperInUseMandBw indicates the operational in-use bandwidth in kilo-bits per second(kbps) for the mandatory channels on the bundle for this service application on sap/sdp instance. |

**(4 of 5)**

| 5620 SAM counter name | Type | MIB counter name | Description |
|---|---|---|---|
| inUseOptionalBw | long | tmnxMcacServOperInUseOptnlBw | The value of tmnxMcacServOperInUseOptnlBw indicates the operational in-use bandwidth in kilo-bits per second(kbps) for the optional channels on the bundle for this service application on sap/sdp instance. |
| maxBw | long | tmnxMcacServOperMaxBw | The value of tmnxMcacServOperMaxBw indicates the operational maximum bandwidth in kilo-bits per second(kbps) on the bundle for this service application on sap/sdp instance. |
| portsDown | long | tmnxMcacServOperPortsDown | The value of tmnxMcacServOperPortsDown indicates the the number of ports down on the service application on sap/sdp. This value is used to index the table tmnxMcacLagTable to get the bundle level id. |
| valuesInTransit | boolean | tmnxMcacServOperValuesInTransit | The value of tmnxMcacServOperValuesInTransit indicates that the operational (available and in-use mandatory/optional) value for the following objects are in transition due to configuration change: tmnxMcacServOperAvailOptnlBw tmnxMcacServOperAvailMandBw tmnxMcacServOperInUseMandBw tmnxMcacServOperInUseOptnlBw When Multicast CAC Policy is applied on the sap/sdp for the join of the next channel, the operational values will be recalculated and applied to the above objects and the value for tmnxMcacServOperValuesInTransit will be set to 'false'. If the value of tmnxMcacServOperValuesInTransit is 'true' then the values are in transition. |

**(5 of 5)**

### Table A-33 multichassis statistics

| 5620 SAM counter name | Type | MIB counter name | Description |
|---|---|---|---|
| **McEPPeerStats**<br>MIB table name: TIMETRA-MC-REDUNDANCY-MIB.tmnxMcEPPeerStatsTable<br>Monitored class: multichassis.MultiChassisEndpoint | | | |
| configPacketsReceived | long | tmnxMcEPPeerStatsPktsRxConfig | The value of tmnxMcEPPeerStatsPktsRxConfig indicates how many valid MC-Endpoint control packets of type end-point config were received on this system from the peer. |

**(1 of 8)**

| 5620 SAM counter name | Type | MIB counter name | Description |
|---|---|---|---|
| failedMD5AuthenticationPacketsDropped | long | tmnxMcEPPeerStatsDropMD5 | The value of tmnxMcEPPeerStatsDropMD5 indicates how many MC-Endpoint control packets were dropped on this system from the peer because the packet failed MD5 authentication. |
| failedPacketsTransmitted | long | tmnxMcEPPeerStatsPktsTxFailed | The value of tmnxMcEPPeerStatsPktsTxFailed indicates how many MC-Endpoint control packets failed to be transmitted from this system to the peer. |
| invalidLagIdPacketsDropped | long | tmnxMcEPPeerStatsDropTlvInvldId | The value of tmnxMcEPPeerStatsDropTlvInvldId indicates how many MC-Endpoint control packets were dropped on this system from the peer because the packet referred to an invalid or non multi-chassis end-point. |
| invalidSizePacketsDropped | long | tmnxMcEPPeerStatsDropTlvInvldSz | The value of tmnxMcEPPeerStatsDropTlvInvldSz indicates how many MC-Endpoint control packets were dropped on this system from the peer because the packet size was invalid. |
| keepAlivePacketsReceived | long | tmnxMcEPPeerStatsPktsRxKpalive | The value of tmnxMcEPPeerStatsPktsRxKpalive indicates how many valid MC-Endpoint control packets of type keepalive were received on this system from the peer. |
| keepalivePacketsTransmitted | long | tmnxMcEPPeerStatsPktsTxKpalive | The value of tmnxMcEPPeerStatsPktsTxKpalive indicates how many MC-Endpoint control packets of type keepalive were transmitted from this system to the peer. |
| noEpPeerPacketsDropped | long | tmnxMcEPPeerStatsDropEpNoPeer | The value of tmnxMcEPPeerStatsDropEpNoPeer indicates how many pkts were dropped because MC-Endpoint does not have a MC-peer assigned yet or MC-Endpoint is attached to a different peer. |
| outOfSequencePacketsDropped | long | tmnxMcEPPeerStatsDropOutOfSeq | The value of tmnxMcEPPeerStatsDropOutOfSeq indicates how many MC-Endpoint control packets were dropped on this system from the peer because the packet was out of sequence. |
| packetsReceived | long | tmnxMcEPPeerStatsPktsRx | The value of tmnxMcEPPeerStatsPktsRx indicates how many valid MC-Endpoint control packets were received on this system from the peer. |
| packetsTransmitted | long | tmnxMcEPPeerStatsPktsTx | The value of tmnxMcEPPeerStatsPktsTx indicates how many MC-Endpoint control packets were transmitted from this system to the peer. |
| peerConfigPacketsReceived | long | tmnxMcEPPeerStatsPktsRxPeerCfg | The value of tmnxMcEPPeerStatsPktsRxPeerCfg indicates how many valid MC-Endpoint control packets of type peer config were received on this system from the peer. |

**(2 of 8)**

| 5620 SAM counter name | Type | MIB counter name | Description |
|---|---|---|---|
| peerConfigPacketsTransmitted | long | tmnxMcEPPeerStatsPktsTxPeerCfg | The value of tmnxMcEPPeerStatsPktsTxPeerCfg indicates how many MC-Endpoint control packets of type peer config were transmitted from this system to the peer. |
| stateDisabledPacketsDropped | long | tmnxMcEPPeerStatsDropStateDsbld | The value of tmnxMcEPPeerStatsDropStateDsbld indicates how many MC-Endpoint control packets were dropped on this system from the peer because the peer was administratively disabled. |
| statePacketsReceived | long | tmnxMcEPPeerStatsPktsRxState | The value of tmnxMcEPPeerStatsPktsRxState indicates how many valid MC-Endpoint control packets of type end-point state were received on this system from the peer. |
| tooShortPacketsDropped | long | tmnxMcEPPeerStatsDropPktTooShrt | The value of tmnxMcEPPeerStatsDropPktTooShrt indicates how many MC-Endpoint control packets were dropped on this system from the peer because the packet was too short. |
| unknownTlvPacketsDropped | long | tmnxMcEPPeerStatsDropUnknownTlv | The value of tmnxMcEPPeerStatsDropUnknownTlv indicates how many MC-Endpoint control packets were dropped on this system from the peer because the packet contained an unknown TLV. |
| **MultiChassisPeerRingStats**<br>MIB table name: TIMETRA-MC-REDUNDANCY-MIB.tmnxMcrPeerStatsTable<br>Monitored class: multichassis.Peer | | | |
| keepAlivePacketsTransmitted | long | tmnxMcrPeerStatsTxKeepAlive | The value of tmnxMcrPeerStatsTxKeepAlive indicates how many valid MC-Ring control packets of type 'keepalive' were transmitted to the peer. |
| mcsIdRequestPacketsReceived | long | tmnxMcrPeerStatsRxMcsIdReq | The value of tmnxMcrPeerStatsRxMcsIdReq indicates how many valid MCS ID requests were received from the peer. |
| mcsIdRequestPacketsTransmitted | long | tmnxMcrPeerStatsTxMcsIdReq | The value of tmnxMcrPeerStatsTxMcsIdReq indicates how many valid MCS ID requests were transmitted to the peer. |
| mcsIdResponsePacketsReceived | long | tmnxMcrPeerStatsRxMcsIdRsp | The value of tmnxMcrPeerStatsRxMcsIdRsp indicates how many valid MCS ID responses were received from the peer. |
| mcsIdResponsePacketsTransmitted | long | tmnxMcrPeerStatsTxMcsIdRsp | The value of tmnxMcrPeerStatsTxMcsIdRsp indicates how many valid MCS ID responses were transmitted to the peer. |
| ringExistsRequestPacketsReceived | long | tmnxMcrPeerStatsRxRingExistsReq | The value of tmnxMcrPeerStatsRxRingExistsReq indicates how many valid 'ring exists' requests were received from the peer. |

**(3 of 8)**

| 5620 SAM counter name | Type | MIB counter name | Description |
|---|---|---|---|
| ringExistsRequestPacketsTransmitted | long | tmnxMcrPeerStatsTxRingExistsReq | The value of tmnxMcrPeerStatsTxRingExistsReq indicates how many valid 'ring exists' requests were transmitted to the peer. |
| ringExistsResponsePacketsReceived | long | tmnxMcrPeerStatsRxRingExistsRsp | The value of tmnxMcrPeerStatsRxRingExistsRsp indicates how many valid 'ring exists' responses were received from the peer. |
| ringExistsResponsePacketsTransmitted | long | tmnxMcrPeerStatsTxRingExistsRsp | The value of tmnxMcrPeerStatsTxRingExistsRsp indicates how many valid 'ring exists' responses were transmitted to the peer. |
| ringKeepAlivePacketsReceived | long | tmnxMcrPeerStatsRxKeepAlive | The value of tmnxMcrPeerStatsRxKeepAlive indicates how many valid MC-Ring control packets of type 'keepalive' were received from the peer. |
| ringSignallingPacketsReceived | long | tmnxMcrPeerStatsRx | The value of tmnxMcrPeerStatsRx indicates how many valid MC-Ring signalling messages were received from the peer. |
| ringSignallingPacketsTransmitted | long | tmnxMcrPeerStatsTx | The value of tmnxMcrPeerStatsTx indicates how many valid MC-Ring signalling messages were transmitted to the peer. |
| **MultiChassisRingNodeStats**<br>MIB table name: TIMETRA-MC-REDUNDANCY-MIB.tmnxMcrRingNodeStatsTable<br>Monitored class: multichassis.MultiChassisRingNode | | | |
| detectedPacketsAcknowledged | long | tmnxMcrRingNodeStatsTxDetectAck | The value of tmnxMcrRingNodeStatsTxDetectAck indicates how many valid 'detected ring node' signalling messages were acknowledged to the peer for this multi-chassis ring node. |
| detectedPacketsPeerAcknowledged | long | tmnxMcrRingNodeStatsRxDetectAck | The value of tmnxMcrRingNodeStatsRxDetectAck indicates how many valid 'detected ring node' signalling messages were acknowledged by the peer for this multi-chassis ring node. |
| detectedPacketsReceived | long | tmnxMcrRingNodeStatsRxDetect | The value of tmnxMcrRingNodeStatsRxDetect indicates how many valid 'detected ring node' signalling messages were received from the peer for this multi-chassis ring node. |
| detectedPacketsTransmitted | long | tmnxMcrRingNodeStatsTxDetect | The value of tmnxMcrRingNodeStatsTxDetect indicates how many valid 'detected ring node' signalling messages were transmitted to the peer for this multi-chassis ring node. |
| rncvPacketsReceived | long | tmnxMcrRingNodeStatsRncvRxResp | The value of tmnxMcrRingNodeStatsRncvRxResp indicates how many valid connectivity verification messages were received from this multi-chassis ring node. |

**(4 of 8)**

| 5620 SAM counter name | Type | MIB counter name | Description |
|---|---|---|---|
| rncvPacketsRoundTripTime | long | tmnxMcrRingNodeStatsRncvRtTime | The value of tmnxMcrRingNodeStatsRncvRtTime indicates the round-trip-time of the last successful connectivity verification for this multi-chassis ring node. If there has not been a successful connectivity verification, the value of tmnxMcrRingNodeStatsRncvRtTime is zero. |
| rncvPacketsTransmitted | long | tmnxMcrRingNodeStatsRncvTxReq | The value of tmnxMcrRingNodeStatsRncvTxReq indicates how many valid connectivity verification messages were transmitted to this multi-chassis ring node. |
| **MultiChassisRingStats**<br>MIB table name: TIMETRA-MC-REDUNDANCY-MIB.tmnxMcrRingStatsTable<br>Monitored class: multichassis.MultiChassisRing | | | |
| opaquePacketsReceivedDelivered | long | tmnxMcrRingStatsRxOpaqueDelivrd | The value of tmnxMcrRingStatsRxOpaqueDelivrd indicates how many valid opaque signalling messages were received from the peer and delivered for this multi-chassis ring. |
| opaquePacketsReceivedNoDestination | long | tmnxMcrRingStatsRxOpaqueNoDest | The value of tmnxMcrRingStatsRxOpaqueNoDest indicates how many valid opaque signalling messages were received from the peer and for which no destination could be found. |
| opaquePacketsTransmitted | long | tmnxMcrRingStatsTxOpaque | The value of tmnxMcrRingStatsTxOpaque indicates how many valid opaque signalling messages were transmitted to the peer for this multi-chassis ring. |
| sapsChangedPacketsReceived | long | tmnxMcrRingStatsRxSapsChanged | The value of tmnxMcrRingStatsRxSapsChanged indicates how many valid 'SAPs changed info' signalling messages were received from the peer for this multi-chassis ring. |
| sapsChangedPacketsTransmitted | long | tmnxMcrRingStatsTxSapsChanged | The value of tmnxMcrRingStatsTxSapsChanged indicates how many valid 'SAPs changed info' signalling messages were transmitted to the peer for this multi-chassis ring. |
| **PeerStats**<br>MIB table name: TIMETRA-MC-REDUNDANCY-MIB.tmnxMcLagPeerStatsTable<br>Monitored class: multichassis.Peer | | | |
| configPacketsReceived | long | tmnxMcLagPeerStatsPktsRxConfig | The value of tmnxMcLagPeerStatsPktsRxConfig indicates how many valid MC-Lag control packets of type lag config were received on this system from the peer. |

**(5 of 8)**

| 5620 SAM counter name | Type | MIB counter name | Description |
|---|---|---|---|
| failedMD5AuthenticationPacketsDropped | long | tmnxMcLagPeerStatsDropMD5 | The value of tmnxMcLagPeerStatsDropMD5 indicates how many MC-Lag control packets were dropped on this system from the peer because the packet failed MD5 authentication. |
| failedPacketsTransmitted | long | tmnxMcLagPeerStatsPktsTxFailed | The value of tmnxMcLagPeerStatsPktsTxFailed indicates how many MC-Lag control packets failed to be transmitted from this system to the peer. |
| invalidLagIdPacketsDropped | long | tmnxMcLagPeerStatsDropTlvInvldId | The value of tmnxMcLagPeerStatsDropTlvInvldId indicates how many MC-Lag control packets were dropped on this system from the peer because the packet referred to an invalid or non multi-chassis lag. |
| invalidSizePacketsDropped | long | tmnxMcLagPeerStatsDropTlvInvldSz | The value of tmnxMcLagPeerStatsDropTlvInvldSz indicates how many MC-Lag control packets were dropped on this system from the peer because the packet size was invalid. |
| keepAlivePacketsReceived | long | tmnxMcLagPeerStatsPktsRxKpalive | The value of tmnxMcLagPeerStatsPktsRxKpalive indicates how many valid MC-Lag control packets of type keepalive were received on this system from the peer. |
| keepalivePacketsTransmitted | long | tmnxMcLagPeerStatsPktsTxKpalive | The value of tmnxMcLagPeerStatsPktsTxKpalive indicates how many MC-Lag control packets of type keepalive were transmitted from this system to the peer. |
| outOfSequencePacketsDropped | long | tmnxMcLagPeerStatsDropOutOfSeq | The value of tmnxMcLagPeerStatsDropOutOfSeq indicates how many MC-Lag control packets were dropped on this system from the peer because the packet was out of sequence. |
| packetsReceived | long | tmnxMcLagPeerStatsPktsRx | The value of tmnxMcLagPeerStatsPktsRx indicates how many valid MC-Lag control packets were received on this system from the peer. |
| packetsTransmitted | long | tmnxMcLagPeerStatsPktsTx | The value of tmnxMcLagPeerStatsPktsTx indicates how many MC-Lag control packets were transmitted from this system to the peer. |
| peerConfigPacketsReceived | long | tmnxMcLagPeerStatsPktsRxPeerCfg | The value of tmnxMcLagPeerStatsPktsRxPeerCfg indicates how many valid MC-Lag control packets of type peer config were received on this system from the peer. |
| peerConfigPacketsTransmitted | long | tmnxMcLagPeerStatsPktsTxPeerCfg | The value of tmnxMcLagPeerStatsPktsTxPeerCfg indicates how many MC-Lag control packets of type peer config were transmitted from this system to the peer. |

**(6 of 8)**

| 5620 SAM counter name | Type | MIB counter name | Description |
|---|---|---|---|
| stateDisabledPacketsDropped | long | tmnxMcLagPeerStatsDropStateDsbld | The value of tmnxMcLagPeerStatsDropStateDsbld indicates how many MC-Lag control packets were dropped on this system from the peer because the peer was administratively disabled. |
| statePacketsReceived | long | tmnxMcLagPeerStatsPktsRxState | The value of tmnxMcLagPeerStatsPktsRxState indicates how many valid MC-Lag control packets of type lag state were received on this system from the peer. |
| tooShortPacketsDropped | long | tmnxMcLagPeerStatsDropPktTooShrt | The value of tmnxMcLagPeerStatsDropPktTooShrt indicates how many MC-Lag control packets were dropped on this system from the peer because the packet was too short. |
| unknownTlvPacketsDropped | long | tmnxMcLagPeerStatsDropUnknownTlv | The value of tmnxMcLagPeerStatsDropUnknownTlv indicates how many MC-Lag control packets were dropped on this system from the peer because the packet contained an unknown TLV. |
| **PeerSynchronizationProtocolStats**<br>MIB table name: TIMETRA-MC-REDUNDANCY-MIB.tmnxMcPeerSyncStatsTable<br>Monitored class: multichassis.PeerSynchronizationProtocol | | | |
| bodyDecodeErrorPacketsReceived | long | tmnxMcPeerSyncPktsRxErrBody | The value of tmnxMcPeerSyncPktsRxErrBody indicates the number of packets with body decode errors received from the multi-chassis peer. |
| dataPacketsReceived | long | tmnxMcPeerSyncPktsRxData | The value of tmnxMcPeerSyncPktsRxData indicates the number of hello packets received from the multi-chassis peer. |
| dataPacketsTransmitted | long | tmnxMcPeerSyncPktsTxData | The value of tmnxMcPeerSyncPktsTxData indicates the number of data packets transmitted to the multi-chassis peer. |
| erroneousPacketsReceived | long | tmnxMcPeerSyncPktsRxErr | The value of tmnxMcPeerSyncPktsRxErr indicates the number of erroneous packets received from the multi-chassis peer. |
| headerDecodeErrorPacketsReceived | long | tmnxMcPeerSyncPktsRxErrHeader | The value of tmnxMcPeerSyncPktsRxErrHeader indicates the number of packets with header decode errors received from the multi-chassis peer. |
| helloPacketsReceived | long | tmnxMcPeerSyncPktsRxHello | The value of tmnxMcPeerSyncPktsRxHello indicates the number of hello packets received from the multi-chassis peer. |
| helloPacketsTransmitted | long | tmnxMcPeerSyncPktsTxHello | The value of tmnxMcPeerSyncPktsTxHello indicates the number of hello packets transmitted to the multi-chassis peer. |

**(7 of 8)**

| 5620 SAM counter name | Type | MIB counter name | Description |
|---|---|---|---|
| otherPacketsReceived | long | tmnxMcPeerSyncPktsRxOther | The value of tmnxMcPeerSyncPktsRxOther indicates the number of all other packet types received from the multi-chassis peer. |
| otherPacketsTransmitted | long | tmnxMcPeerSyncPktsTxOther | The value of tmnxMcPeerSyncPktsTxOther indicates the number of all other packet types transmitted to the multi-chassis peer. |
| packetTransmissionErrors | long | tmnxMcPeerSyncPktsTxErr | The value of tmnxMcPeerSyncPktsTxErr indicates the number of packet transmission errors. |
| sequenceNumberErrorPacketsReceived | long | tmnxMcPeerSyncPktsRxErrSeqNum | The value of tmnxMcPeerSyncPktsRxErrSeqNum indicates the number of packets with sequence number errors received from the multi-chassis peer. |
| totalPacketsReceived | long | tmnxMcPeerSyncPktsRxAll | The value of tmnxMcPeerSyncPktsRxAll indicates the total number of packets received from the multi-chassis peer. |
| totalPacketsTransmitted | long | tmnxMcPeerSyncPktsTxAll | The value of tmnxMcPeerSyncPktsTxAll indicates the total number of packets transmitted to the multi-chassis peer. |

**(8 of 8)**

**Table A-34 nat statistics**

| 5620 SAM counter name | Type | MIB counter name | Description |
|---|---|---|---|
| **IsaMemberStats**<br>MIB table name: TIMETRA-NAT-MIB.tmnxNatIsaMemberStatsTable<br>Monitored class: nat.IsaMda | | | |
| statsName | String | tmnxNatIsaMemberStatsName | The value of the object tmnxNatIsaMemberStatsName indicates the human-readable identifier of the statistics contained in this conceptual row. |
| statsType | int | tmnxNatIsaMemberStatsType | The value of tmnxNatIsaMemberStatsType indicates the type of NAT session statistics contained in this conceptual row. |
| statsValue | long | tmnxNatIsaMemberStatsVal | The value of the object tmnxNatIsaMemberStatsVal indicates the value of the statistics contained in this conceptual row. |
| **L2AwSubscriberStats**<br>MIB table name: TIMETRA-NAT-MIB.tmnxNatL2AwSubStatTable<br>Monitored class: nat.L2AwSubscriber | | | |
| icmpPortUsage | int | tmnxNatL2AwSubStatIcmpPortUsage | The value of the object tmnxNatL2AwSubStatIcmpPortUsage indicates the ICMP port usage of this NAT subscriber. |

**(1 of 4)**

| 5620 SAM counter name | Type | MIB counter name | Description |
|---|---|---|---|
| icmpPortUsageHi | boolean | tmnxNatL2AwSubStatIcmpPortUsageH | The value of the object tmnxNatL2AwSubStatIcmpPortUsageH indicates if the ICMP port usage of this NAT subscriber is high according to the values of the objects tmnxNatPlcyPortWatermarkHigh and tmnxNatPlcyPortWatermarkLow. |
| sessions | int | tmnxNatL2AwSubStatSessions | The value of tmnxNatL2AwSubStatSessions indicates the current number of active sessions of this NAT subscriber. In other words, it is the number of ports in use out of the nonreserved range. |
| sessionsPrio | int | tmnxNatL2AwSubStatSessionsPrio | The value of tmnxNatL2AwSubStatSessionsPrio indicates the current number of active prioritized sessions of this subscriber. In other words, it is the number of reserved ports in use. |
| sessionUsage | int | tmnxNatL2AwSubStatSessionUsage | The value of the object tmnxNatL2AwSubStatSessionUsage indicates the session usage of this NAT subscriber. |
| tcpPortUsage | int | tmnxNatL2AwSubStatTcpPortUsage | The value of the object tmnxNatL2AwSubStatTcpPortUsage indicates the TCP port usage of this NAT subscriber. |
| tcpPortUsageHi | boolean | tmnxNatL2AwSubStatTcpPortUsageHi | The value of the object tmnxNatL2AwSubStatTcpPortUsageHi indicates if the TCP port usage of this NAT subscriber is high according to the values of the objects tmnxNatPlcyPortWatermarkHigh and tmnxNatPlcyPortWatermarkLow. |
| udpPortUsage | int | tmnxNatL2AwSubStatUdpPortUsage | The value of the object tmnxNatL2AwSubStatUdpPortUsage indicates the UDP port usage of this NAT subscriber. |
| udpPortUsageHi | boolean | tmnxNatL2AwSubStatUdpPortUsageHi | The value of the object tmnxNatL2AwSubStatUdpPortUsageHi indicates if the UDP port usage of this NAT subscriber is high according to the values of the objects tmnxNatPlcyPortWatermarkHigh and tmnxNatPlcyPortWatermarkLow. |
| **LsnSubscriberStats**<br>MIB table name: TIMETRA-NAT-MIB.tmnxNatLsnSubStatTable<br>Monitored class: nat.LsnSubscriber | | | |
| icmpPortUsage | int | tmnxNatLsnSubStatIcmpPortUsage | The value of the object tmnxNatLsnSubStatIcmpPortUsage indicates the ICMP port usage of this NAT subscriber. |

**(2 of 4)**

| 5620 SAM counter name | Type | MIB counter name | Description |
|---|---|---|---|
| icmpPortUsageHi | boolean | tmnxNatLsnSubStatIcmpPortUsageHi | The value of the object tmnxNatLsnSubStatIcmpPortUsageHi indicates if the ICMP port usage of this NAT subscriber is high according to the values of the objects tmnxNatPlcyPortWatermarkHigh and tmnxNatPlcyPortWatermarkLow. |
| lsnSubId | long | tmnxNatLsnSubId | The value of tmnxNatLsnSubId indicates the identifier of this Large Scale NAT subscriber. |
| sessions | int | tmnxNatLsnSubStatSessions | The value of tmnxNatLsnSubStatSessions indicates the current number of active sessions of this NAT subscriber. In other words, it is the number of ports in use out of the nonreserved range. |
| sessionsPrio | int | tmnxNatLsnSubStatSessionsPrio | The value of tmnxNatLsnSubStatSessionsPrio indicates the current number of active prioritized sessions of this subscriber. In other words, it is the number of reserved ports in use. |
| sessionUsage | int | tmnxNatLsnSubStatSessionUsage | The value of the object tmnxNatLsnSubStatSessionUsage indicates the session usage of this NAT subscriber. |
| tcpPortUsage | int | tmnxNatLsnSubStatTcpPortUsage | The value of the object tmnxNatLsnSubStatTcpPortUsage indicates the TCP port usage of this NAT subscriber. |
| tcpPortUsageHi | boolean | tmnxNatLsnSubStatTcpPortUsageHi | The value of the object tmnxNatLsnSubStatTcpPortUsageHi indicates if the TCP port usage of this NAT subscriber is high according to the values of the objects tmnxNatPlcyPortWatermarkHigh and tmnxNatPlcyPortWatermarkLow. |
| udpPortUsage | int | tmnxNatLsnSubStatUdpPortUsage | The value of the object tmnxNatLsnSubStatUdpPortUsage indicates the UDP port usage of this NAT subscriber. |
| udpPortUsageHi | boolean | tmnxNatLsnSubStatUdpPortUsageHi | The value of the object tmnxNatLsnSubStatUdpPortUsageHi indicates if the UDP port usage of this NAT subscriber is high according to the values of the objects tmnxNatPlcyPortWatermarkHigh and tmnxNatPlcyPortWatermarkLow. |
| **NatPolicyStats**<br>MIB table name: TIMETRA-NAT-MIB.tmnxNatPlcyStatsTable<br>Monitored class: nat.IsaMda | | | |
| cardSlot | int | tmnxCardSlotNum | — |
| chassisIndex | int | tmnxChassisIndex | — |
| mdaSlot | int | tmnxMDASlotNum | — |
| policyName | String | tmnxNatPlcyName | The value of tmnxNatPlcyName specifies the name of this NAT policy. |

**(3 of 4)**

| 5620 SAM counter name | Type | MIB counter name | Description |
|---|---|---|---|
| statsName | String | tmnxNatPlcyStatsName | The value of the object tmnxNatPlcyStatsName indicates the human-readable identifier of the statistics contained in this conceptual row. |
| statsType | int | tmnxNatPlcyStatsType | The value of tmnxNatPlcyStatsType indicates the type of NAT usage statistics contained in this conceptual row. |
| statsValue | long | tmnxNatPlcyStatsVal | The value of the object tmnxNatPlcyStatsVal indicates the value of the statistics contained in this conceptual row. |

**(4 of 4)**

### Table A-35 ospf statistics

| 5620 SAM counter name | Type | MIB counter name | Description |
|---|---|---|---|
| **AreaBasicStats**<br>MIB table name: TIMETRA-OSPF-NG-MIB.tmnxOspfAreaTable<br>Monitored class: ospf.AreaSite | | | |
| nssaTranslatorEvents | long | tmnxOspfAreaNssaTranslatorEvents | The value of tmnxOspfAreaNssaTranslatorEvents indicates the number of Translator State changes that have occurred since the last boot-up. |
| totalLSACount | long | tmnxOspfAreaScopeLsaCount | The value of tmnxOspfAreaScopeLsaCount indicates the total number of Area-Scope link state advertisements in this area's link-state database. |
| totalSpfRuns | long | tmnxOspfAreaSpfRuns | The value of tmnxOspfAreaSpfRuns indicates the number of times that the intra-area route table has been calculated using this area's link-state database. This is typically done using Dijkstra's algorithm. |
| totalUnknownLSACount | long | tmnxOspfAreaScopeUnkLsaCount | The value of tmnxOspfAreaScopeUnkLsaCount indicates the total number of unknown Area-Scope link-state advertisements in this area's link-state database. |
| **InterfaceGeneralStats**<br>MIB table name: TIMETRA-OSPF-NG-MIB.tmnxOspfIfStatsTable<br>Monitored class: ospf.Interface | | | |
| events | long | tmnxOspfIfEvents | The value of tmnxOspfIfEvents indicates the number of times this OSPF interface has changed its state, or an error has occurred. |
| **InterfaceReceiveStats**<br>MIB table name: TIMETRA-OSPF-NG-MIB.tmnxOspfIfStatsTable<br>Monitored class: ospf.Interface | | | |

**(1 of 18)**

| 5620 SAM counter name | Type | MIB counter name | Description |
|---|---|---|---|
| databaseDescriptionPackets | long | tmnxOspfIfRxDBDs | The value of tmnxOspfIfRxDBDs indicates the total number of OSPF Database Description packets received on this interface since tmnxOspfAdminState was last set to 'enabled'. |
| databaseDescriptionPackets | long | tmnxOspfIfTxDBDs | The value of tmnxOspfIfTxDBDs indicates the total number of OSPF Database Description packets transmitted on this interface since tmnxOspfAdminState was last set to 'enabled'. |
| helloPackets | long | tmnxOspfIfRxHellos | The value of tmnxOspfIfRxHellos indicates the total number of OSPF Hello packets received on this interface since tmnxOspfAdminState was last set to 'enabled'. |
| helloPackets | long | tmnxOspfIfTxHellos | The value of tmnxOspfIfTxHellos indicates the total number of OSPF Hello packets transmitted on this interface since tmnxOspfAdminState was last set to 'enabled'. |
| linkStateAcknowledgements | long | tmnxOspfIfRxLSAcks | The value of tmnxOspfIfRxLSAcks indicates the total number of Link State Acknowledgements received on this interface since tmnxOspfAdminState was last set to 'enabled'. |
| linkStateAcknowledgements | long | tmnxOspfIfTxLSAcks | The value of tmnxOspfIfTxLSAcks indicates the total number of OSPF Link State Acknowledgements transmitted on this interface since tmnxOspfAdminState was last set to 'enabled'. |
| linkStateRequests | long | tmnxOspfIfRxLSRs | The value of tmnxOspfIfRxLSRs indicates the total number of Link State Requests (LSRs) received on this interface since tmnxOspfAdminState was last set to 'enabled'. |
| linkStateRequests | long | tmnxOspfIfTxLSRs | The value of tmnxOspfIfTxLSRs indicates the total number of OSPF Link State Requests (LSRs)transmitted on this interface since tmnxOspfAdminState was last set to 'enabled'. |
| linkStateUpdates | long | tmnxOspfIfRxLSUs | The value of tmnxOspfIfRxLSUs indicates the total number of Link State Updates (LSUs) received on this interface since tmnxOspfAdminState was last set to 'enabled'. |
| linkStateUpdates | long | tmnxOspfIfTxLSUs | The value of tmnxOspfIfTxLSUs indicates the total number of OSPF Link State Updates (LSUs) transmitted on this interface since tmnxOspfAdminState was last set to 'enabled'. |
| lsasWithBadChecksums | long | tmnxOspfIfRxBadChecksums | The value of tmnxOspfIfRxBadChecksums indicates the count of LSAs received with bad checksums. |

**(2 of 18)**

| 5620 SAM counter name | Type | MIB counter name | Description |
|---|---|---|---|
| totalPackets | long | tmnxOspfIfRxPackets | The value of tmnxOspfIfRxPackets indicates the total number of OSPF packets received on this interface since tmnxOspfAdminState was last set to 'enabled'. |
| totalPackets | long | tmnxOspfIfTxPackets | The value of tmnxOspfIfTxPackets indicates the total number of OSPF packets transmitted on this interface since tmnxOspfAdminState was last set to 'enabled'. |
| **InterfaceStatusStats**<br>MIB table name: TIMETRA-OSPF-NG-MIB.tmnxOspfIfStatsTable<br>Monitored class: ospf.Interface | | | |
| authorizationFailures | long | tmnxOspfIfAuthFailures | The value of tmnxOspfIfAuthFailures indicates the total number of OSPF packets received with an invalid authorization key since tmnxOspfAdminState was last set to 'enabled'. |
| badAreas | long | tmnxOspfIfBadAreas | The value of tmnxOspfIfBadAreas indicates the total number of OSPF packets received with an area mismatch since tmnxOspfAdminState was last set to 'enabled'. |
| badAuthorizationTypes | long | tmnxOspfIfBadAuthTypes | The value of tmnxOspfIfBadAuthTypes indicates the total number of OSPF packets received with an invalid authorization type since tmnxOspfAdminState was last set to 'enabled'. |
| badDeadIntervals | long | tmnxOspfIfBadDeadIntervals | The value of tmnxOspfIfBadDeadIntervals indicates the total number of OSPF packets received where the dead interval given in the packet was not equal to that configured on this interface since tmnxOspfAdminState was last set to 'enabled'. |
| badDestinationAddresses | long | tmnxOspfIfBadDstAddrs | The value of tmnxOspfIfBadDstAddrs indicates the total number of OSPF packets received with the incorrect IP destination address since tmnxOspfAdminState was last set to 'enabled'. |
| badHelloIntervals | long | tmnxOspfIfBadHelloIntervals | The value of tmnxOspfIfBadHelloIntervals indicates the total number of OSPF packets received where the hello interval given in packet was not equal to that configured on this interface since tmnxOspfAdminState was last set to 'enabled'. |
| badLengths | long | tmnxOspfIfBadLengths | The value of tmnxOspfIfBadLengths indicates the total number of OSPF packets received on this interface with a total length not equal to the length given in the packet itself since tmnxOspfAdminState was last set to 'enabled'. |

**(3 of 18)**

| 5620 SAM counter name | Type | MIB counter name | Description |
|---|---|---|---|
| badNeighbors | long | tmnxOspfIfBadNeighbors | The value of tmnxOspfIfBadNeighbors indicates the total number of OSPF packets received where the neighbor information does not match the information this router has for the neighbor since tmnxOspfAdminState was last set to 'enabled'. |
| badNetworks | long | tmnxOspfIfBadNetworks | The value of tmnxOspfIfBadNetworks indicates the total number of OSPF packets received with invalid network or mask since tmnxOspfAdminState was last set to 'enabled'. |
| badOptions | long | tmnxOspfIfBadOptions | The value of tmnxOspfIfBadOptions indicates the total number of OSPF packets received with an option that does not match those configured for this interface or area since tmnxOspfAdminState was last set to 'enabled'. |
| badPacketTypes | long | tmnxOspfIfBadPacketTypes | The value of tmnxOspfIfBadPacketTypes indicates the total number of OSPF packets received with an invalid OSPF packet type since tmnxOspfAdminState was last set to 'enabled'. |
| badVersions | long | tmnxOspfIfBadVersions | The value of tmnxOspfIfBadVersions indicates the total number of OSPF packets received with bad OSPF version numbers since tmnxOspfAdminState was last set to 'enabled'. |
| badVirtualLinks | long | tmnxOspfIfBadVirtualLinks | The value of tmnxOspfIfBadVirtualLinks indicates the total number of OSPF packets received on this interface that are destined to a virtual link that does not exist since tmnxOspfAdminState was last set to 'enabled'. |
| discardPackets | long | tmnxOspfIfDiscardPackets | The value of tmnxOspfIfDiscardPackets indicates the total number of OSPF packets discarded on this interface since tmnxOspfAdminState was last set to 'enabled'. |
| retransmitOuts | long | tmnxOspfIfRetransmitOuts | The value of tmnxOspfIfRetransmitOuts indicates the total number of OSPF Retransmits sent on this interface since tmnxOspfAdminState was last set to 'enabled'. |
| **InterfaceTransmitStats**<br>MIB table name: TIMETRA-OSPF-NG-MIB.tmnxOspfIfStatsTable<br>Monitored class: ospf.Interface | | | |
| databaseDescriptionPackets | long | tmnxOspfIfRxDBDs | The value of tmnxOspfIfRxDBDs indicates the total number of OSPF Database Description packets received on this interface since tmnxOspfAdminState was last set to 'enabled'. |

**(4 of 18)**

| 5620 SAM counter name | Type | MIB counter name | Description |
|---|---|---|---|
| databaseDescriptionPackets | long | tmnxOspfIfTxDBDs | The value of tmnxOspfIfTxDBDs indicates the total number of OSPF Database Description packets transmitted on this interface since tmnxOspfAdminState was last set to 'enabled'. |
| helloPackets | long | tmnxOspfIfRxHellos | The value of tmnxOspfIfRxHellos indicates the total number of OSPF Hello packets received on this interface since tmnxOspfAdminState was last set to 'enabled'. |
| helloPackets | long | tmnxOspfIfTxHellos | The value of tmnxOspfIfTxHellos indicates the total number of OSPF Hello packets transmitted on this interface since tmnxOspfAdminState was last set to 'enabled'. |
| linkStateAcknowledgements | long | tmnxOspfIfRxLSAcks | The value of tmnxOspfIfRxLSAcks indicates the total number of Link State Acknowledgements received on this interface since tmnxOspfAdminState was last set to 'enabled'. |
| linkStateAcknowledgements | long | tmnxOspfIfTxLSAcks | The value of tmnxOspfIfTxLSAcks indicates the total number of OSPF Link State Acknowledgements transmitted on this interface since tmnxOspfAdminState was last set to 'enabled'. |
| linkStateRequests | long | tmnxOspfIfRxLSRs | The value of tmnxOspfIfRxLSRs indicates the total number of Link State Requests (LSRs) received on this interface since tmnxOspfAdminState was last set to 'enabled'. |
| linkStateRequests | long | tmnxOspfIfTxLSRs | The value of tmnxOspfIfTxLSRs indicates the total number of OSPF Link State Requests (LSRs)transmitted on this interface since tmnxOspfAdminState was last set to 'enabled'. |
| linkStateUpdates | long | tmnxOspfIfRxLSUs | The value of tmnxOspfIfRxLSUs indicates the total number of Link State Updates (LSUs) received on this interface since tmnxOspfAdminState was last set to 'enabled'. |
| linkStateUpdates | long | tmnxOspfIfTxLSUs | The value of tmnxOspfIfTxLSUs indicates the total number of OSPF Link State Updates (LSUs) transmitted on this interface since tmnxOspfAdminState was last set to 'enabled'. |
| totalPackets | long | tmnxOspfIfRxPackets | The value of tmnxOspfIfRxPackets indicates the total number of OSPF packets received on this interface since tmnxOspfAdminState was last set to 'enabled'. |
| totalPackets | long | tmnxOspfIfTxPackets | The value of tmnxOspfIfTxPackets indicates the total number of OSPF packets transmitted on this interface since tmnxOspfAdminState was last set to 'enabled'. |

**(5 of 18)**

| 5620 SAM counter name | Type | MIB counter name | Description |
|---|---|---|---|
| **NeighborGeneralStats**<br>MIB table name: TIMETRA-OSPF-NG-MIB.tmnxOspfNbrStatsTable<br>Monitored classes:<br>• ospf.Neighbor<br>• ospf.OspfNeighbor | | | |
| events | long | tmnxOspfNbrEvents | The value of tmnxOspfNbrEvents indicates the number of times this neighbor relationship has changed state, or an error has occurred. |
| retransmissionQueueLength | long | tmnxOspfNbrLsRetransQLen | The value of tmnxOspfNbrLsRetransQLen indicates the current length of the retransmission queue. |
| **NeighborStatusStats**<br>MIB table name: TIMETRA-OSPF-NG-MIB.tmnxOspfNbrStatsTable<br>Monitored class: ospf.Neighbor | | | |
| badMtus | long | tmnxOspfNbrBadMTUs | The value of tmnxOspfNbrBadMTUs indicates the total number of times when the MTU in a received database description packet was larger than the MTU of the receiving interface since tmnxOspfAdminState was last set to 'enabled'. |
| badNeighborStates | long | tmnxOspfNbrBadNbrStates | The value of tmnxOspfNbrBadNbrStates indicates the total number of OSPF packets received when the neighbor state was not expecting to receive this packet type since tmnxOspfAdminState was last set to 'enabled'. |
| badPackets | long | tmnxOspfNbrBadPackets | The value of tmnxOspfNbrBadPackets indicates the total number of times when an LS update was received with an illegal LS type or an option mismatch since tmnxOspfAdminState was last set to 'enabled'. |
| badSequenceNumbers | long | tmnxOspfNbrBadSeqNums | The value of tmnxOspfNbrBadSeqNums indicates the total number of times when a database description packet was received with a sequence number mismatch since tmnxOspfAdminState was last set to 'enabled'. |
| duplicates | long | tmnxOspfNbrDuplicates | The value of tmnxOspfNbrDuplicates indicates the total number of times when a duplicate database description packet was received during the Exchange state since tmnxOspfAdminState was last set to 'enabled'. |
| lsaInstallFailed | long | tmnxOspfNbrLsaInstallFailed | The value of tmnxOspfNbrLsaInstallFailed indicates the total number of times an LSA could not be installed into the LSDB due to a resource allocation issue since tmnxOspfAdminState was last set to 'enabled'. |

**(6 of 18)**

| 5620 SAM counter name | Type | MIB counter name | Description |
|---|---|---|---|
| lsaNotInLSDB | long | tmnxOspfNbrLsaNotInLsdbs | The value of tmnxOspfNbrLsaNotInLsdbs indicates the total number of times when an LS request was received for an LSA not installed in the LSDB of this router since tmnxOspfAdminState was last set to 'enabled'. |
| numberOfRestarts | long | tmnxOspfNbrNumRestarts | The value of tmnxOspfNbrNumRestarts indicates the number of times the neighbor has attempted restart. |
| optionMismatches | long | tmnxOspfNbrOptionMismatches | The value of tmnxOspfNbrOptionMismatches indicates the total number of times when a LS update was received with an option mismatch since tmnxOspfAdminState was last set to 'enabled'. |
| **ShamLinkGeneralStats**<br>MIB table name: TIMETRA-OSPF-NG-MIB.tmnxOspfShamIfStatsTable<br>Monitored class: ospf.ShamLink | | | |
| events | long | tmnxOspfShamIfEvents | The value of tmnxOspfShamIfEvents indicates the number of state changes or error events on this sham link. |
| **ShamLinkNeighborGeneralStats**<br>MIB table name: TIMETRA-OSPF-NG-MIB.tmnxOspfShamNbrStatsTable<br>Monitored class: ospf.ShamLinkNeighbor | | | |
| events | long | tmnxOspfShamNbrEvents | The value of tmnxOspfShamNbrEvents indicates the number of times this sham link has changed its state, or an error has occurred. |
| retransmissionQueueLength | long | tmnxOspfShamNbrLsRetransQLen | The value of tmnxOspfShamNbrLsRetransQLen indicates the current length of the retransmission queue. |
| **ShamLinkNeighborStatusStats**<br>MIB table name: TIMETRA-OSPF-NG-MIB.tmnxOspfShamNbrStatsTable<br>Monitored class: ospf.ShamLinkNeighbor | | | |
| badMtus | long | tmnxOspfShamNbrBadMTUs | The value of tmnxOspfShamNbrBadMTUs indicates the total number of times when the MTU in a received database description packet was larger than the MTU of the receiving interface since tmnxOspfAdminState was last set to 'enabled'. |
| badPackets | long | tmnxOspfShamNbrBadPackets | The value of tmnxOspfShamNbrBadPackets indicates the total number of times when an LS update was received with an illegal LS type or an option mismatch since tmnxOspfAdminState was last set to 'enabled'. |

**(7 of 18)**

| 5620 SAM counter name | Type | MIB counter name | Description |
|---|---|---|---|
| badSequenceNumbers | long | tmnxOspfShamNbrBadSeqNums | The value of tmnxOspfShamNbrBadSeqNums indicates the total number of times when a database description packet was received with a sequence number mismatch since tmnxOspfAdminState was last set to 'enabled'. |
| badVirtualNeighborStates | long | tmnxOspfShamNbrBadNbrStates | The value of tmnxOspfShamNbrBadNbrStates indicates the total number of OSPF packets received when the sham link neighbor state was not expecting to receive this packet type since tmnxOspfAdminState was last set to 'enabled'. |
| duplicates | long | tmnxOspfShamNbrDuplicates | The value of tmnxOspfShamNbrDuplicates indicates the total number of times when a duplicate database description packet was received during the Exchange state since tmnxOspfAdminState was last set to 'enabled'. |
| lsaInstallFailed | long | tmnxOspfShamNbrLsaInstallFail | The value of tmnxOspfShamNbrLsaInstallFail indicates the total number of times when an LSA could not be installed into the LSDB due to a resource allocation issue since tmnxOspfAdminState was last set to 'enabled'. |
| lsaNotInLSDB | long | tmnxOspfShamNbrLsaNotInLsdbs | The value of tmnxOspfShamNbrLsaNotInLsdbs indicates the total number of times when an LS request was received for an LSA not installed in the LSDB of this router since tmnxOspfAdminState was last set to 'enabled'. |
| numberOfRestarts | long | tmnxOspfShamNbrNumRestarts | The value of tmnxOspfShamNbrNumRestarts indicates the number of times the sham link neighbor has attempted restart since tmnxOspfAdminState was last set to 'enabled'. |
| optionMismatches | long | tmnxOspfShamNbrOptionMismatch | The value of tmnxOspfShamNbrOptionMismatch indicates the total number of times when a LS update was received with an option mismatch since tmnxOspfAdminState was last set to 'enabled'. |
| **ShamLinkReceiveStats**<br>MIB table name: TIMETRA-OSPF-NG-MIB.tmnxOspfShamIfStatsTable<br>Monitored class: ospf.ShamLink | | | |
| databaseDescriptionPackets | long | tmnxOspfShamIfRxDBDs | The value of tmnxOspfShamIfRxDBDs indicates the total number of OSPF Database Description packets received on this sham link since tmnxOspfAdminState was last set to 'enabled'. |

**(8 of 18)**

| 5620 SAM counter name | Type | MIB counter name | Description |
|---|---|---|---|
| databaseDescriptionPackets | long | tmnxOspfShamIfTxDBDs | The value of tmnxOspfShamIfTxDBDs indicates the total number of OSPF Database Description packets transmitted on this sham link since tmnxOspfAdminState was last set to 'enabled'. |
| helloPackets | long | tmnxOspfShamIfRxHellos | The value of tmnxOspfShamIfRxHellos indicates the total number of OSPF Hello packets received on this sham link since tmnxOspfAdminState was last set to 'enabled'. |
| helloPackets | long | tmnxOspfShamIfTxHellos | The value of tmnxOspfShamIfTxHellos indicates the total number of OSPF Hello packets transmitted on this sham link since tmnxOspfAdminState was last set to 'enabled'. |
| linkStateAcknowledgements | long | tmnxOspfShamIfRxLSAcks | The value of tmnxOspfShamIfRxLSAcks indicates the total number of Link State Acknowledgements received on this sham link since tmnxOspfAdminState was last set to 'enabled'. |
| linkStateAcknowledgements | long | tmnxOspfShamIfTxLSAcks | The value of tmnxOspfShamIfTxLSAcks indicates the total number of OSPF Link State Acknowledgements transmitted on this sham link since tmnxOspfAdminState was last set to 'enabled'. |
| linkStateRequests | long | tmnxOspfShamIfRxLSRs | The value of tmnxOspfShamIfRxLSRs indicates the total number of Link State Requests (LSRs) received on this sham link since tmnxOspfAdminState was last set to 'enabled'. |
| linkStateRequests | long | tmnxOspfShamIfTxLSRs | The value of tmnxOspfShamIfTxLSRs indicates the total number of OSPF Link State Requests (LSRs) transmitted on this sham link since tmnxOspfAdminState was last set to 'enabled'. |
| linkStateUpdates | long | tmnxOspfShamIfRxLSUs | The value of tmnxOspfShamIfRxLSUs indicates the total number of Link State Updates (LSUs) received on this sham link since tmnxOspfAdminState was last set to 'enabled'. |
| linkStateUpdates | long | tmnxOspfShamIfTxLSUs | The value of tmnxOspfShamIfTxLSUs indicates the total number of OSPF Link State Updates (LSUs) transmitted on this sham link since tmnxOspfAdminState was last set to 'enabled'. |
| lsasWithBadChecksums | long | tmnxOspfShamIfRxBadChecksums | The value of tmnxOspfShamIfRxBadChecksums indicates the count of LSAs received with bad checksums. |
| totalPackets | long | tmnxOspfShamIfRxPackets | The value of tmnxOspfShamIfRxPackets indicates the total number of OSPF packets received on this sham link since tmnxOspfAdminState was last set to 'enabled'. |

**(9 of 18)**

| 5620 SAM counter name | Type | MIB counter name | Description |
|---|---|---|---|
| totalPackets | long | tmnxOspfShamIfTxPackets | The value of tmnxOspfShamIfTxPackets indicates the total number of OSPF packets transmitted on this sham link since tmnxOspfAdminState was last set to 'enabled'. |
| **ShamLinkStatusStats**<br>MIB table name: TIMETRA-OSPF-NG-MIB.tmnxOspfShamIfStatsTable<br>Monitored class: ospf.ShamLink | | | |
| authorizationFailures | long | tmnxOspfShamIfAuthFailures | The value of tmnxOspfShamIfAuthFailures indicates the total number of OSPF packets received with an invalid authorization key since tmnxOspfAdminState was last set to 'enabled'. |
| badAreas | long | tmnxOspfShamIfBadAreas | The value of tmnxOspfShamIfBadAreas indicates the total number of OSPF packets received with an area mismatch since tmnxOspfAdminState was last set to 'enabled'. |
| badAuthorizationTypes | long | tmnxOspfShamIfBadAuthTypes | The value of tmnxOspfShamIfBadAuthTypes indicates the total number of OSPF packets received with an invalid authorization type since tmnxOspfAdminState was last set to 'enabled'. |
| badDeadIntervals | long | tmnxOspfShamIfBadDeadIntervals | The value of tmnxOspfShamIfBadDeadIntervals indicates the total number of OSPF packets received where the dead interval given in the packet was not equal to that configured on this sham link since tmnxOspfAdminState was last set to 'enabled'. |
| badDestinationAddresses | long | tmnxOspfShamIfBadDstAddrs | The value of tmnxOspfShamIfBadDstAddrs indicates the total number of OSPF packets received with the incorrect IP destination address since tmnxOspfAdminState was last set to 'enabled'. |
| badHelloIntervals | long | tmnxOspfShamIfBadHelloIntervals | The value of tmnxOspfShamIfBadHelloIntervals indicates the total number of OSPF packets received where the hello interval given in packet was not equal to that configured on this sham link since tmnxOspfAdminState was last set to 'enabled'. |
| badLengths | long | tmnxOspfShamIfBadLengths | The value of tmnxOspfShamIfBadLengths indicates the total number of OSPF packets received on this sham link with a total length not equal to the length given in the packet itself since tmnxOspfAdminState was last set to 'enabled'. |

**(10 of 18)**

| 5620 SAM counter name | Type | MIB counter name | Description |
|---|---|---|---|
| badNeighbors | long | tmnxOspfShamIfBadNeighbors | The value of tmnxOspfShamIfBadNeighbors indicates the total number of OSPF packets received where the neighbor information does not match the information this router has for the neighbor since tmnxOspfAdminState was last set to 'enabled'. |
| badNetworks | long | tmnxOspfShamIfBadNetworks | The value of tmnxOspfShamIfBadNetworks indicates the total number of OSPF packets received with invalid network or mask since tmnxOspfAdminState was last set to 'enabled'. |
| badOptions | long | tmnxOspfShamIfBadOptions | The value of tmnxOspfShamIfBadOptions indicates the total number of OSPF packets received with an option that does not match those configured for this sham link or area since tmnxOspfAdminState was last set to 'enabled'. |
| badPacketTypes | long | tmnxOspfShamIfBadPacketTypes | The value of tmnxOspfShamIfBadPacketTypes indicates the total number of OSPF packets received with an invalid OSPF packet type since tmnxOspfAdminState was last set to 'enabled'. |
| badVersions | long | tmnxOspfShamIfBadVersions | The value of tmnxOspfShamIfBadVersions indicates the total number of OSPF packets received with bad OSPF version numbers since tmnxOspfAdminState was last set to 'enabled'. |
| discardPackets | long | tmnxOspfShamIfDiscardPackets | The value of tmnxOspfShamIfDiscardPackets indicates the total number of OSPF packets discarded on this sham link since tmnxOspfAdminState was last set to 'enabled'. |
| retransmitOuts | long | tmnxOspfShamIfRetransmitOuts | The value of tmnxOspfShamIfRetransmitOuts indicates the total number of OSPF Retransmits sent on this sham link since tmnxOspfAdminState was last set to 'enabled'. |
| **ShamLinkTransmitStats**<br>MIB table name: TIMETRA-OSPF-NG-MIB.tmnxOspfShamIfStatsTable<br>Monitored class: ospf.ShamLink | | | |
| databaseDescriptionPackets | long | tmnxOspfShamIfRxDBDs | The value of tmnxOspfShamIfRxDBDs indicates the total number of OSPF Database Description packets received on this sham link since tmnxOspfAdminState was last set to 'enabled'. |
| databaseDescriptionPackets | long | tmnxOspfShamIfTxDBDs | The value of tmnxOspfShamIfTxDBDs indicates the total number of OSPF Database Description packets transmitted on this sham link since tmnxOspfAdminState was last set to 'enabled'. |

**(11 of 18)**

| 5620 SAM counter name | Type | MIB counter name | Description |
|---|---|---|---|
| helloPackets | long | tmnxOspfShamIfRxHellos | The value of tmnxOspfShamIfRxHellos indicates the total number of OSPF Hello packets received on this sham link since tmnxOspfAdminState was last set to 'enabled'. |
| helloPackets | long | tmnxOspfShamIfTxHellos | The value of tmnxOspfShamIfTxHellos indicates the total number of OSPF Hello packets transmitted on this sham link since tmnxOspfAdminState was last set to 'enabled'. |
| linkStateAcknowledgements | long | tmnxOspfShamIfRxLSAcks | The value of tmnxOspfShamIfRxLSAcks indicates the total number of Link State Acknowledgements received on this sham link since tmnxOspfAdminState was last set to 'enabled'. |
| linkStateAcknowledgements | long | tmnxOspfShamIfTxLSAcks | The value of tmnxOspfShamIfTxLSAcks indicates the total number of OSPF Link State Acknowledgements transmitted on this sham link since tmnxOspfAdminState was last set to 'enabled'. |
| linkStateRequests | long | tmnxOspfShamIfRxLSRs | The value of tmnxOspfShamIfRxLSRs indicates the total number of Link State Requests (LSRs) received on this sham link since tmnxOspfAdminState was last set to 'enabled'. |
| linkStateRequests | long | tmnxOspfShamIfTxLSRs | The value of tmnxOspfShamIfTxLSRs indicates the total number of OSPF Link State Requests (LSRs) transmitted on this sham link since tmnxOspfAdminState was last set to 'enabled'. |
| linkStateUpdates | long | tmnxOspfShamIfRxLSUs | The value of tmnxOspfShamIfRxLSUs indicates the total number of Link State Updates (LSUs) received on this sham link since tmnxOspfAdminState was last set to 'enabled'. |
| linkStateUpdates | long | tmnxOspfShamIfTxLSUs | The value of tmnxOspfShamIfTxLSUs indicates the total number of OSPF Link State Updates (LSUs) transmitted on this sham link since tmnxOspfAdminState was last set to 'enabled'. |
| totalPackets | long | tmnxOspfShamIfRxPackets | The value of tmnxOspfShamIfRxPackets indicates the total number of OSPF packets received on this sham link since tmnxOspfAdminState was last set to 'enabled'. |
| totalPackets | long | tmnxOspfShamIfTxPackets | The value of tmnxOspfShamIfTxPackets indicates the total number of OSPF packets transmitted on this sham link since tmnxOspfAdminState was last set to 'enabled'. |
| **SiteStats**<br>MIB table name: TIMETRA-OSPF-NG-MIB.tmnxOspfStatisticsTable<br>Monitored class: ospf.Site | | | |

**(12 of 18)**

| 5620 SAM counter name | Type | MIB counter name | Description |
|---|---|---|---|
| addRouteFailed | long | tmnxOspfRoutesAddsFailed | The value of tmnxOspfRoutesAddsFailed indicates the number of times an attempt to add a route to the Route Table Manager (RTM) failed for this OSPF instance. |
| cspfDroppedRequests | long | tmnxOspfCSPFDroppedRequests | The value of tmnxOspfCSPFDroppedRequests indicates the number of dropped CSPF requests made by the OSPF protocol. |
| cspfPathsFound | long | tmnxOspfCSPFPathsFound | The value of tmnxOspfCSPFPathsFound indicates the number of of paths found for the requests made to OSPF protocol. |
| cspfPathsNotFound | long | tmnxOspfCSPFPathsNotFound | The value of tmnxOspfCSPFPathsNotFound indicates the number of of paths not found for the requests made to OSPF protocol. |
| cspfRequests | long | tmnxOspfCSPFRequests | The value of tmnxOspfCSPFRequests indicates the number of CSPF requests made to the OSPF protocol. |
| deleteRouteFailed | long | tmnxOspfRoutesDelsFailed | The value of tmnxOspfRoutesDelsFailed indicates the number of times an attempt to delete a route from the Route Table Manager (RTM) failed for this instance of OSPF. |
| inOverflowCount | long | tmnxOspfNumTimesInOverflow | The value of tmnxOspfNumTimesInOverflow indicates the count of the number of times the system was in the overflow state. |
| inOverloadCount | long | tmnxOspfNumTimesInOverload | The value of tmnxOspfNumTimesInOverload indicates the count of the number of times the system was overloaded. |
| modifyRouteFailed | long | tmnxOspfRoutesModsFailed | The value of tmnxOspfRoutesModsFailed indicates the number of times an attempt to modify a route in the Route Table Manager (RTM) failed for this instance of OSPF. |
| newLsasOriginated | long | tmnxOspfOriginateNewLsas | The value of tmnxOspfOriginateNewLsas indicates the number of new link-state advertisements that have been originated. This number is incremented each time the router originates a new LSA. |
| newLsasReceived | long | tmnxOspfRxNewLsas | The value of tmnxOspfRxNewLsas indicates the number of link-state advertisements received determined to be new instantiations. This number does not include newer instantiations of self-originated link-state advertisements. |
| spfAttemptsFailed | long | tmnxOspfSpfAttemptsFailed | The value of tmnxOspfSpfAttemptsFailed indicates the number of times an attempt to run SPF has failed because SPF runs have been stopped as a result of insufficient memory resources. |

**(13 of 18)**

| 5620 SAM counter name | Type | MIB counter name | Description |
|---|---|---|---|
| **VirtualLinkGeneralStats**<br>MIB table name: TIMETRA-OSPF-NG-MIB.tmnxOspfVirtIfStatsTable<br>Monitored class: ospf.VirtualLink | | | |
| events | long | tmnxOspfVirtIfEvents | The value of tmnxOspfVirtIfEvents indicates the number of state changes or error events on this Virtual Link. |
| **VirtualLinkReceiveStats**<br>MIB table name: TIMETRA-OSPF-NG-MIB.tmnxOspfVirtIfStatsTable<br>Monitored class: ospf.VirtualLink | | | |
| databaseDescriptionPackets | long | tmnxOspfVirtIfRxDBDs | The value of tmnxOspfVirtIfRxDBDs indicates the total number of OSPF Database Description packets received on this virtual interface. |
| databaseDescriptionPackets | long | tmnxOspfVirtIfTxDBDs | The value of tmnxOspfVirtIfTxDBDs indicates the total number of OSPF Database Description packets transmitted on this virtual interface. |
| helloPackets | long | tmnxOspfVirtIfRxHellos | The value of tmnxOspfVirtIfRxHellos indicates the total number of OSPF Hello packets received on this virtual interface. |
| helloPackets | long | tmnxOspfVirtIfTxHellos | The value of tmnxOspfVirtIfTxHellos indicates the total number of OSPF Hello packets transmitted on this virtual interface since it was created. |
| linkStateAcknowledgements | long | tmnxOspfVirtIfRxLSAcks | The value of tmnxOspfVirtIfRxLSAcks indicates the total number of Link State Acknowledgements received on this virtual interface. |
| linkStateAcknowledgements | long | tmnxOspfVirtIfTxLSAcks | The value of tmnxOspfVirtIfTxLSAcks indicates the total number of OSPF Link State Acknowledgements transmitted on this virtual interface. |
| linkStateRequests | long | tmnxOspfVirtIfRxLSRs | The value of tmnxOspfVirtIfRxLSRs indicates the total number of OSPF Link State Requests (LSRs) received on this virtual interface. |
| linkStateRequests | long | tmnxOspfVirtIfTxLSRs | The value of tmnxOspfVirtIfTxLSRs indicates the total number of OSPF Link State Requests (LSRs) transmitted on this virtual interface. |
| linkStateUpdates | long | tmnxOspfVirtIfRxLSUs | The value of tmnxOspfVirtIfRxLSUs indicates the total number of OSPF Link State Updates (LSUs) received on this virtual interface. |
| linkStateUpdates | long | tmnxOspfVirtIfTxLSUs | The value of tmnxOspfVirtIfTxLSUs indicates the total number of OSPF Link State Updates (LSUs) transmitted on this virtual interface. |
| lsasWithBadChecksums | long | tmnxOspfVirtIfRxBadChecksums | The value of tmnxOspfVirtIfRxBadChecksums indicates the count of LSAs received with bad checksums. |

**(14 of 18)**

| 5620 SAM counter name | Type | MIB counter name | Description |
|---|---|---|---|
| totalPackets | long | tmnxOspfVirtIfRxPackets | The value of tmnxOspfVirtIfRxPackets indicates the total number of OSPF packets received on this virtual interface since it was created. |
| totalPackets | long | tmnxOspfVirtIfTxPackets | The value of tmnxOspfVirtIfTxPackets indicates the total number of OSPF packets transmitted on this virtual interface since it was created. |
| **VirtualLinkStatusStats**<br>MIB table name: TIMETRA-OSPF-NG-MIB.tmnxOspfVirtIfStatsTable<br>Monitored class: ospf.VirtualLink | | | |
| authorizationFailures | long | tmnxOspfVirtIfAuthFailures | The value of tmnxOspfVirtIfAuthFailures indicates the total number of OSPF packets received on this virtual interface with invalid authentication keys. |
| badAreas | long | tmnxOspfVirtIfBadAreas | The value of tmnxOspfVirtIfBadAreas indicates the total number of OSPF packets received on this virtual interface with area mismatches. |
| badAuthorizationTypes | long | tmnxOspfVirtIfBadAuthTypes | The value of tmnxOspfVirtIfBadAuthTypes indicates the total number of OSPF packets received on this virtual interface with invalid authentication types. |
| badDeadIntervals | long | tmnxOspfVirtIfBadDeadIntervals | The value of tmnxOspfVirtIfBadDeadIntervals indicates the total number of OSPF packets received where the dead interval given in the packet was not equal to that configured on this virtual interface since tmnxOspfAdminState was last set to 'enabled'. |
| badDestinationAddresses | long | tmnxOspfVirtIfBadDstAddrs | The value of tmnxOspfVirtIfBadDstAddrs indicates the total number of OSPF packets received on this virtual interface with invalid destination IP address. |
| badHelloIntervals | long | tmnxOspfVirtIfBadHelloIntervls | The value of tmnxOspfVirtIfBadHelloIntervls indicates the total number of OSPF packets received where the hello interval given in packet was not equal to that configured on this virtual interface since tmnxOspfAdminState was last set to 'enabled'. |
| badLengths | long | tmnxOspfVirtIfBadLengths | The value of tmnxOspfVirtIfBadLengths indicates the total number of OSPF packets received on this virtual interface with a total length not equal to the length given in the packet itself since tmnxOspfAdminState was last set to 'enabled'. |
| badNeighbors | long | tmnxOspfVirtIfBadNeighbors | The value of tmnxOspfVirtIfBadNeighbors indicates the total number of OSPF packets received where the neighbor information does not match the configuration this router has for the neighbor. |

**(15 of 18)**

| 5620 SAM counter name | Type | MIB counter name | Description |
|---|---|---|---|
| badNetworks | long | tmnxOspfVirtIfBadNetworks | The value of tmnxOspfVirtIfBadNetworks indicates the total number of OSPF packets received on this virtual interface with invalid network or mask fields. |
| badOptions | long | tmnxOspfVirtIfBadOptions | The value of tmnxOspfVirtIfBadOptions indicates the total number of OSPF packets received with an option that does not match those configured for this virtual interface or transit-area since tmnxOspfAdminState was last set to 'enabled'. |
| badPacketTypes | long | tmnxOspfVirtIfBadPacketTypes | The value of tmnxOspfVirtIfBadPacketTypes indicates the total number of OSPF packets received on this virtual interface with invalid OSPF packet types. |
| badVersions | long | tmnxOspfVirtIfBadVersions | The value of tmnxOspfVirtIfBadVersions indicates the total number of OSPF packets received on this virtual interface with invalid OSPF version numbers. |
| discardPackets | long | tmnxOspfVirtIfDiscardPackets | The value of tmnxOspfVirtIfDiscardPackets indicates the total number of OSPF packets discarded on this virtual interface. |
| retransmitOuts | long | tmnxOspfVirtIfRetransmitOuts | The value of tmnxOspfVirtIfRetransmitOuts indicates the total number of OSPF packets retransmitted on this virtual interface. |
| **VirtualLinkTransmitStats**<br>MIB table name: TIMETRA-OSPF-NG-MIB.tmnxOspfVirtIfStatsTable<br>Monitored class: ospf.VirtualLink | | | |
| databaseDescriptionPackets | long | tmnxOspfVirtIfRxDBDs | The value of tmnxOspfVirtIfRxDBDs indicates the total number of OSPF Database Description packets received on this virtual interface. |
| databaseDescriptionPackets | long | tmnxOspfVirtIfTxDBDs | The value of tmnxOspfVirtIfTxDBDs indicates the total number of OSPF Database Description packets transmitted on this virtual interface. |
| helloPackets | long | tmnxOspfVirtIfRxHellos | The value of tmnxOspfVirtIfRxHellos indicates the total number of OSPF Hello packets received on this virtual interface. |
| helloPackets | long | tmnxOspfVirtIfTxHellos | The value of tmnxOspfVirtIfTxHellos indicates the total number of OSPF Hello packets transmitted on this virtual interface since it was created. |
| linkStateAcknowledgements | long | tmnxOspfVirtIfRxLSAcks | The value of tmnxOspfVirtIfRxLSAcks indicates the total number of Link State Acknowledgements received on this virtual interface. |
| linkStateAcknowledgements | long | tmnxOspfVirtIfTxLSAcks | The value of tmnxOspfVirtIfTxLSAcks indicates the total number of OSPF Link State Acknowledgements transmitted on this virtual interface. |

**(16 of 18)**

| 5620 SAM counter name | Type | MIB counter name | Description |
|---|---|---|---|
| linkStateRequests | long | tmnxOspfVirtIfRxLSRs | The value of tmnxOspfVirtIfRxLSRs indicates the total number of OSPF Link State Requests (LSRs) received on this virtual interface. |
| linkStateRequests | long | tmnxOspfVirtIfTxLSRs | The value of tmnxOspfVirtIfTxLSRs indicates the total number of OSPF Link State Requests (LSRs) transmitted on this virtual interface. |
| linkStateUpdates | long | tmnxOspfVirtIfRxLSUs | The value of tmnxOspfVirtIfRxLSUs indicates the total number of OSPF Link State Updates (LSUs) received on this virtual interface. |
| linkStateUpdates | long | tmnxOspfVirtIfTxLSUs | The value of tmnxOspfVirtIfTxLSUs indicates the total number of OSPF Link State Updates (LSUs) transmitted on this virtual interface. |
| totalPackets | long | tmnxOspfVirtIfRxPackets | The value of tmnxOspfVirtIfRxPackets indicates the total number of OSPF packets received on this virtual interface since it was created. |
| totalPackets | long | tmnxOspfVirtIfTxPackets | The value of tmnxOspfVirtIfTxPackets indicates the total number of OSPF packets transmitted on this virtual interface since it was created. |
| **VirtualNeighborGeneralStats**<br>MIB table name: TIMETRA-OSPF-NG-MIB.tmnxOspfVirtNbrStatsTable<br>Monitored class: ospf.VirtualNeighbor | | | |
| events | long | tmnxOspfVirtNbrEvents | The value of tmnxOspfVirtNbrEvents indicates the number of times this virtual link has changed its state, or an error has occurred. |
| retransmissionQueueLength | long | tmnxOspfVirtNbrLsRetransQLen | The value of tmnxOspfVirtNbrLsRetransQLen indicates the current length of the retransmission queue. |
| **VirtualNeighborStatusStats**<br>MIB table name: TIMETRA-OSPF-NG-MIB.tmnxOspfVirtNbrStatsTable<br>Monitored class: ospf.VirtualNeighbor | | | |
| badMtus | long | tmnxOspfVirtNbrBadMTUs | The value of tmnxOspfVirtNbrBadMTUs indicates the total number of times when the MTU in a received database description packet was larger than the MTU of the receiving interface since tmnxOspfAdminState was last set to 'enabled'. |
| badPackets | long | tmnxOspfVirtNbrBadPackets | The value of tmnxOspfVirtNbrBadPackets indicates the total number of times when an LS update was received with an illegal LS type or an option mismatch since tmnxOspfAdminState was last set to 'enabled'. |

**(17 of 18)**

| 5620 SAM counter name | Type | MIB counter name | Description |
|---|---|---|---|
| badSequenceNumbers | long | tmnxOspfVirtNbrBadSeqNums | The value of tmnxOspfVirtNbrBadSeqNums indicates the total number of times when a database description packet was received with a sequence number mismatch since tmnxOspfAdminState was last set to 'enabled'. |
| badVirtualNeighborStates | long | tmnxOspfVirtNbrBadNbrStates | The value of tmnxOspfVirtNbrBadNbrStates indicates the total number of OSPF packets received when the virtual neighbor state was not expecting to receive this packet type since tmnxOspfAdminState was last set to 'enabled'. |
| duplicates | long | tmnxOspfVirtNbrDuplicates | The value of tmnxOspfVirtNbrDuplicates indicates the total number of times when a duplicate database description packet was received during the Exchange state since tmnxOspfAdminState was last set to 'enabled'. |
| lsaInstallFailed | long | tmnxOspfVirtNbrLsaInstallFail | The value of tmnxOspfVirtNbrLsaInstallFail indicates the total number of times when an LSA could not be installed into the LSDB due to a resource allocation issue since tmnxOspfAdminState was last set to 'enabled'. |
| lsaNotInLSDB | long | tmnxOspfVirtNbrLsaNotInLsdbs | The value of tmnxOspfVirtNbrLsaNotInLsdbs indicates the total number of times when an LS request was received for an LSA not installed in the LSDB of this router since tmnxOspfAdminState was last set to 'enabled'. |
| numberOfRestarts | long | tmnxOspfVirtNbrNumRestarts | The value of tmnxOspfVirtNbrNumRestarts indicates the number of times the virtual neighbor has attempted restart since tmnxOspfAdminState was last set to 'enabled'. |
| optionMismatches | long | tmnxOspfVirtNbrOptionMismatch | The value of tmnxOspfVirtNbrOptionMismatch indicates the total number of times when a LS update was received with an option mismatch since tmnxOspfAdminState was last set to 'enabled'. |

**(18 of 18)**

**Table A-36 pae802_1x statistics**

| 5620 SAM counter name | Type | MIB counter name | Description |
|---|---|---|---|
| **PaePortAuthenticatorDiagStats**<br>MIB table name: IEEE8021-PAE-MIB.dot1xAuthDiagTable<br>Monitored classes:<br>• equipment.PhysicalPort<br>• equipment.ManagementPort | | | |
| dot1xAuthAuthEapLogoffWhileAuthenticated | long | dot1xAuthAuthEapLogoffWhileAuthenticated | Counts the number of times that the state machine transitions from AUTHENTICATED to DISCONNECTED, as a result of an EAPOL-Logoff message being received from the Supplicant. REFERENCE 9.4.2, 8.5.4.2.12. |
| dot1xAuthAuthEapLogoffWhileAuthenticating | long | dot1xAuthAuthEapLogoffWhileAuthenticating | Counts the number of times that the state machine transitions from AUTHENTICATING to ABORTING, as a result of an EAPOL-Logoff message being received from the Supplicant. REFERENCE 9.4.2, 8.5.4.2.9. |
| dot1xAuthAuthEapStartsWhileAuthenticated | long | dot1xAuthAuthEapStartsWhileAuthenticated | Counts the number of times that the state machine transitions from AUTHENTICATED to CONNECTING, as a result of an EAPOL-Start message being received from the Supplicant. REFERENCE 9.4.2, 8.5.4.2.11. |
| dot1xAuthAuthEapStartsWhileAuthenticating | long | dot1xAuthAuthEapStartsWhileAuthenticating | Counts the number of times that the state machine transitions from AUTHENTICATING to ABORTING, as a result of an EAPOL-Start message being received from the Supplicant. REFERENCE 9.4.2, 8.5.4.2.8. |
| dot1xAuthAuthFailWhileAuthenticating | long | dot1xAuthAuthFailWhileAuthenticating | Counts the number of times that the state machine transitions from AUTHENTICATING to HELD, as a result of the Backend Authentication state machine indicating authentication failure (authFail = TRUE). REFERENCE 9.4.2, 8.5.4.2.6. |
| dot1xAuthAuthReauthsWhileAuthenticated | long | dot1xAuthAuthReauthsWhileAuthenticated | Counts the number of times that the state machine transitions from AUTHENTICATED to CONNECTING, as a result of a reauthentication request (reAuthenticate = TRUE). REFERENCE 9.4.2, 8.5.4.2.10. |
| dot1xAuthAuthReauthsWhileAuthenticating | long | dot1xAuthAuthReauthsWhileAuthenticating | Counts the number of times that the state machine transitions from AUTHENTICATING to ABORTING, as a result of a reauthentication request (reAuthenticate = TRUE). REFERENCE 9.4.2, 8.5.4.2.7. |

**(1 of 4)**

| 5620 SAM counter name | Type | MIB counter name | Description |
|---|---|---|---|
| dot1xAuthAuthSuccessWhileAuthenticating | long | dot1xAuthAuthSuccessWhileAuthenticating | Counts the number of times that the state machine transitions from AUTHENTICATING to AUTHENTICATED, as a result of the Backend Authentication state machine indicating successful authentication of the Supplicant (authSuccess = TRUE). REFERENCE 9.4.2, 8.5.4.2.4. |
| dot1xAuthAuthTimeoutsWhileAuthenticating | long | dot1xAuthAuthTimeoutsWhileAuthenticating | Counts the number of times that the state machine transitions from AUTHENTICATING to ABORTING, as a result of the Backend Authentication state machine indicating authentication timeout (authTimeout = TRUE). REFERENCE 9.4.2, 8.5.4.2.5. |
| dot1xAuthBackendAccessChallenges | long | dot1xAuthBackendAccessChallenges | Counts the number of times that the state machine receives an initial Access-Challenge packet from the Authentication server (i.e., aReq becomes TRUE, causing exit from the RESPONSE state). Indicates that the Authentication Server has communication with the Authenticator. REFERENCE 9.4.2, 8.5.6.2.2. |
| dot1xAuthBackendAuthFails | long | dot1xAuthBackendAuthFails | Counts the number of times that the state machine receives an EAP-Failure message from the Authentication Server (i.e., aFail becomes TRUE, causing a transition from RESPONSE to FAIL). Indicates that the Supplicant has not authenticated to the Authentication Server. REFERENCE 9.4.2, 8.5.6.2.6. |
| dot1xAuthBackendAuthSuccesses | long | dot1xAuthBackendAuthSuccesses | Counts the number of times that the state machine receives an EAP-Success message from the Authentication Server (i.e., aSuccess becomes TRUE, causing a transition from RESPONSE to SUCCESS). Indicates that the Supplicant has successfully authenticated to the Authentication Server. REFERENCE 9.4.2, 8.5.6.2.5. |
| dot1xAuthBackendNonNakResponsesFromSupplicant | long | dot1xAuthBackendNonNakResponsesFromSupplicant | Counts the number of times that the state machine receives a response from the Supplicant to an initial EAP-Request, and the response is something other than EAP-NAK (i.e., rxResp becomes TRUE, causing the state machine to transition from REQUEST to RESPONSE, and the response is not an EAP-NAK). Indicates that the Supplicant can respond to the Authenticator's chosen EAP-method. REFERENCE 9.4.2, 8.5.6.2.4. |
| dot1xAuthBackendOtherRequestsToSupplicant | long | dot1xAuthBackendOtherRequestsToSupplicant | Counts the number of times that the state machine sends an EAP-Request packet (other than an Identity, Notification, Failure or Success message) to the Supplicant (i.e., executes txReq on entry to the REQUEST state). Indicates that the Authenticator chose an EAP-method. REFERENCE 9.4.2, 8.5.6.2.3. |

**(2 of 4)**

| 5620 SAM counter name | Type | MIB counter name | Description |
|---|---|---|---|
| dot1xAuthBackendResponses | long | dot1xAuthBackendRespon ses | Counts the number of times that the state machine sends an initial Access-Request packet to the Authentication server (i.e., executes sendRespToServer on entry to the RESPONSE state). Indicates that the Authenticator attempted communication with the Authentication Server. REFERENCE 9.4.2, 8.5.6.2.1. |
| dot1xAuthEapLogoffsWhileConnec ting | long | dot1xAuthEapLogoffsWhil eConnecting | Counts the number of times that the state machine transitions from CONNECTING to DISCONNECTED as a result of receiving an EAPOL-Logoff message. REFERENCE 9.4.2, 8.5.4.2.2. |
| dot1xAuthEntersAuthenticating | long | dot1xAuthEntersAuthenti cating | Counts the number of times that the state machine transitions from CONNECTING to AUTHENTICATING, as a result of an EAP-Response/Identity message being received from the Supplicant. REFERENCE 9.4.2, 8.5.4.2.3. |
| dot1xAuthEntersConnecting | long | dot1xAuthEntersConnecti ng | Counts the number of times that the state machine transitions to the CONNECTING state from any other state. REFERENCE 9.4.2, 8.5.4.2.1. |
| **PaePortAuthenticatorSessionStats**<br>MIB table name: IEEE8021-PAE-MIB.dot1xAuthSessionStatsTable<br>Monitored classes:<br>• equipment.PhysicalPort<br>• equipment.ManagementPort | | | |
| dot1xAuthSessionAuthenticMethod | int | dot1xAuthSessionAuthent icMethod | The authentication method used to establish the session. REFERENCE 9.4.4, Session Authentication Method. |
| dot1xAuthSessionFramesRx | long | dot1xAuthSessionFrames Rx | The number of user data frames received on this Port during the session. REFERENCE 9.4.4, Session Frames Received. |
| dot1xAuthSessionFramesTx | long | dot1xAuthSessionFrames Tx | The number of user data frames transmitted on this Port during the session. REFERENCE 9.4.4, Session Frames Transmitted. |
| dot1xAuthSessionOctetsRx | UINT128 | dot1xAuthSessionOctetsR x | The number of octets received in user data frames on this Port during the session. REFERENCE 9.4.4, Session Octets Received. |
| dot1xAuthSessionOctetsTx | UINT128 | dot1xAuthSessionOctetsT x | The number of octets transmitted in user data frames on this Port during the session. REFERENCE 9.4.4, Session Octets Transmitted. |
| dot1xAuthSessionTerminateCause | int | dot1xAuthSessionTermina teCause | The reason for the session termination. REFERENCE 9.4.4, Session Terminate Cause. |
| dot1xAuthSessionTime | long | dot1xAuthSessionTime | The duration of the session in seconds. REFERENCE 9.4.4, Session Time. |

**(3 of 4)**

| 5620 SAM counter name | Type | MIB counter name | Description |
|---|---|---|---|
| **PaePortAuthenticatorStats**<br>MIB table name: IEEE8021-PAE-MIB.dot1xAuthStatsTable<br>Monitored classes:<br>• equipment.PhysicalPort<br>• equipment.ManagementPort | | | |
| dot1xAuthEapLengthErrorFramesRx | long | dot1xAuthEapLengthErrorFramesRx | The number of EAPOL frames that have been received by this Authenticator in which the Packet Body Length field is invalid. REFERENCE 9.4.2, EAP length error frames received. |
| dot1xAuthEapolFramesRx | long | dot1xAuthEapolFramesRx | The number of valid EAPOL frames of any type that have been received by this Authenticator. REFERENCE 9.4.2, EAPOL frames received. |
| dot1xAuthEapolFramesTx | long | dot1xAuthEapolFramesTx | The number of EAPOL frames of any type that have been transmitted by this Authenticator. REFERENCE 9.4.2, EAPOL frames transmitted. |
| dot1xAuthEapolLogoffFramesRx | long | dot1xAuthEapolLogoffFramesRx | The number of EAPOL Logoff frames that have been received by this Authenticator. REFERENCE 9.4.2, EAPOL Logoff frames received. |
| dot1xAuthEapolReqFramesTx | long | dot1xAuthEapolReqFramesTx | The number of EAP Request frames (other than Rq/Id frames) that have been transmitted by this Authenticator. REFERENCE 9.4.2, EAPOL Request frames transmitted. |
| dot1xAuthEapolReqIdFramesTx | long | dot1xAuthEapolReqIdFramesTx | The number of EAP Req/Id frames that have been transmitted by this Authenticator. REFERENCE 9.4.2, EAPOL Req/Id frames transmitted. |
| dot1xAuthEapolRespFramesRx | long | dot1xAuthEapolRespFramesRx | The number of valid EAP Response frames (other than Resp/Id frames) that have been received by this Authenticator. REFERENCE 9.4.2, EAPOL Response frames received. |
| dot1xAuthEapolRespIdFramesRx | long | dot1xAuthEapolRespIdFramesRx | The number of EAP Resp/Id frames that have been received by this Authenticator. REFERENCE 9.4.2, EAPOL Resp/Id frames received. |
| dot1xAuthEapolStartFramesRx | long | dot1xAuthEapolStartFramesRx | The number of EAPOL Start frames that have been received by this Authenticator. REFERENCE 9.4.2, EAPOL Start frames received. |
| dot1xAuthInvalidEapolFramesRx | long | dot1xAuthInvalidEapolFramesRx | The number of EAPOL frames that have been received by this Authenticator in which the frame type is not recognized. REFERENCE 9.4.2, Invalid EAPOL frames received. |
| dot1xAuthLastEapolFrameVersion | long | dot1xAuthLastEapolFrameVersion | The protocol version number carried in the most recently received EAPOL frame. REFERENCE 9.4.2, Last EAPOL frame version. |

**(4 of 4)**

**Table A-37 pim statistics**

| 5620 SAM counter name | Type | MIB counter name | Description |
|---|---|---|---|
| **InterfaceAdditionalStats**<br>MIB table name: TIMETRA-PIM-NG-MIB.vRtrPimNgIfStatsTable<br>Monitored class: pim.Interface | | | |
| bootstrapExpPolicyDrops | long | vRtrPimNgIfBtrExpPolicyDrops | The value of vRtrPimNgIfBtrExpPolicyDrops indicates the number of Bootstrap Messages that were not transmitted on this interface because of Bootstrap export policy. PIM Bootstrap export policies are configured using bootstrap export policy objects in vRtrPimNgGenPolicyTable. |
| bootstrapImpPolicyDrops | long | vRtrPimNgIfBtrImpPolicyDrops | The value of vRtrPimNgIfBtrImpPolicyDrops indicates the number of Bootstrap Messages received on this interface but were dropped because of Bootstrap import policy. PIM Bootstrap import policies are configured using bootstrap import policy objects in vRtrPimNgGenPolicyTable. |
| joinPolicyDrops | long | vRtrPimNgIfJoinPolicyDrops | The value of vRtrPimNgIfJoinPolicyDrops indicates the number of times the join policy match resulted in dropping PIM Join-Prune Message or one of the source group contained in the message. PIM Join policies are configured using join policy objects in vRtrPimNgGenPolicyTable. |
| registerPolicyDrops | long | vRtrPimNgIfRegisterPolicyDrops | The value of vRtrPimNgIfRegisterPolicyDrops indicates the number of times the register policy match resulted in dropping PIM Register Message. PIM Register policies are configured using the register policy objects in vRtrPimNgGenPolicyTable. |
| rxBSMNoRouterAlertDrops | long | vRtrPimNgIfRxBSMNoRouterAlertDrops | The value of vRtrPimNgIfRxBSMNoRouterAlertDrops indicates the number of BSM messages that were dropped because router alert option was not present. |
| rxBSMWrongIfDrops | long | vRtrPimNgIfRxBSMWrongIfDrops | The value of vRtrPimNgIfRxBSMWrongIfDrops indicates the number of BSM messages that were dropped either because they were not sent by the correct RPF neighbor or because they arrived on the wrong interface. |
| rxInvalidJoinPrunes | long | vRtrPimNgIfRxInvalidJoinPrunes | The value of vRtrPimNgIfRxInvalidJoinPrunes indicates the number of invalid PIM Join Prune messages received on this interface. A Join Prune message is invalid when the RP address in the message is not the RP for the group specified in the message. If such a message arrives, a vRtrPimNgInvalidJoinPrune notification is sent. |

**(1 of 7)**

| 5620 SAM counter name | Type | MIB counter name | Description |
|---|---|---|---|
| rxInvalidRegisters | long | vRtrPimNgIfRxInvalidRegisters | The value of vRtrPimNgIfRxInvalidRegisters indicates the number of invalid PIM Register messages received on this interface. A Register message is invalid when the RP address in the message is not the RP for the group specified in the message. If such a message arrives, a vRtrPimNgInvalidRegister notification is sent. |
| rxJoinPruneErrs | long | vRtrPimNgIfRxJoinPruneErrs | The value of vRtrPimNgIfRxJoinPruneErrs indicates the number of errors while processing Join-Prune messages received on this interface. |
| rxJoinPrunes | long | vRtrPimNgIfRxJoinPrunes | The value of vRtrPimNgIfRxJoinPrunes indicates the number of PIM Join Prune messages received on this interface. |
| txJoinPrunes | long | vRtrPimNgIfTxJoinPrunes | The value of vRtrPimNgIfTxJoinPrunes indicates the number of PIM Join Prune messages transmitted on this interface. |
| **InterfaceStats**<br>MIB table name: TIMETRA-PIM-NG-MIB.vRtrPimNgIfStatsTable<br>Monitored class: pim.Interface | | | |
| bsmErrs | long | vRtrPimNgIfTxBsmErrs | The value of vRtrPimNgIfTxBsmErrs indicates the number of errors while transmitting PIM Bootstrap Messages (BSM) on this interface. |
| bsmPdus | long | vRtrPimNgIfTxBsmPdus | The value of vRtrPimNgIfTxBsmPdus indicates the number of PIM Bootstrap Messages (BSM) transmitted on this interface. |
| mcacPolicyDrops | long | vRtrPimNgIfMcacPolicyDrops | The value of the object vRtrPimNgIfMcacPolicyDrops indicates the number times a PIM Group is dropped because of applying a multicast CAC policy on this interface. |
| registerStopErrs | long | vRtrPimNgIfTxRegisterStopErrs | The value of vRtrPimNgIfTxRegisterStopErrs indicates the number of PIM errors while trasmitting PIM Register Stop messages on this interface. |
| registerStops | long | vRtrPimNgIfTxRegisterStops | The value of vRtrPimNgIfTxRegisterStops indicates the number of PIM Register Stop messages transmitted on this interface. |
| rxAssertErrs | long | vRtrPimNgIfRxAssertErrs | The value of vRtrPimNgIfRxAssertErrs indicates the number of errors while processing Assert messages received on this interface. |
| rxAsserts | long | vRtrPimNgIfRxAsserts | The value of vRtrPimNgIfRxAsserts indicates the number of PIM Assert messages received on this interface. |

**(2 of 7)**

| 5620 SAM counter name | Type | MIB counter name | Description |
|---|---|---|---|
| rxBadChecksumDiscards | long | vRtrPimNgIfRxBadChecksumDiscard | The value of vRtrPimNgIfRxBadChecksumDiscard indicates the number of PIM messages received on this interface which were discarded because of bad checksum. |
| rxBadEncodings | long | vRtrPimNgIfRxBadEncodings | The value of vRtrPimNgIfRxBadEncodings indicates the number of PIM messages with bad encodings received on this interface. |
| rxBadVersionDiscards | long | vRtrPimNgIfRxBadVersionDiscard | The value of vRtrPimNgIfRxBadVersionDiscard indicates the number of PIM messages with bad versions received on this interface. |
| rxBsmPduDrops | long | vRtrPimNgIfRxBsmPduDrops | The value of vRtrPimNgIfRxBsmPduDrops indicates the number of Bootstrap Messages received on this interface but were dropped. |
| rxBsmPdus | long | vRtrPimNgIfRxBsmPdus | The value of vRtrPimNgIfRxBsmPdus indicates the number of Bootstrap Messages received on this interface. |
| rxCRPAdvNoRouterAlert | long | vRtrPimNgIfRxCRPAdvNoRtrAlert | The value of vRtrPimNgIfRxCRPAdvNoRtrAlert indicates the number of Candidate-RP Advertizements(C-RP-Adv) received on this interface which had no router alert option set. |
| rxHellos | long | vRtrPimNgIfRxHellos | The value of vRtrPimNgIfRxHellos indicates the number of PIM hello messages received on this interface. |
| rxHellosDropped | long | vRtrPimNgIfRxHellosDropped | The value of vRtrPimNgIfRxHellosDropped indicates the number of PIM Hello messages which were received on this interface but were dropped. |
| rxNbrUnknown | long | vRtrPimNgIfRxNbrUnknown | The value of vRtrPimNgIfRxNbrUnknown indicates the number of PIM messages (other than Hello messages) which were received on this interface and were rejected because the adjacency with the neighbor router was not already established. |
| rxNullRegisters | long | vRtrPimNgIfRxNullRegisters | The value of vRtrPimNgIfRxNullRegisters indicates the number of PIM Null Register messages received on this interface. |
| rxPkts | long | vRtrPimNgIfRxPkts | The value of vRtrPimNgIfRxPkts indicates the number of multicast data packets received on this interface. |
| rxRegisterErrs | long | vRtrPimNgIfRxRegisterErrs | The value of vRtrPimNgIfRxRegisterErrs indicates the number of errors while processing Register messages received on this interface. |
| rxRegisters | long | vRtrPimNgIfRxRegisters | The value of vRtrPimNgIfRxRegisters indicates the number of PIM Register messages received on this interface. |

**(3 of 7)**

| 5620 SAM counter name | Type | MIB counter name | Description |
|---|---|---|---|
| rxRegisterStopErrs | long | vRtrPimNgIfRxRegisterStopErrs | The value of vRtrPimNgIfRxRegisterStopErrs indicates the number of errors while processing Register Stop messages received on this interface. |
| rxRegisterStops | long | vRtrPimNgIfRxRegisterStops | The value of vRtrPimNgIfRxRegisterStops indicates the number of PIM Register Stop messages received on this interface. |
| rxUnknownPdus | long | vRtrPimNgIfRxUnknownPdus | The value of vRtrPimNgIfRxUnknownPdus indicates the number of packets received with an unsupported PIM type. |
| sgTypes | long | vRtrPimNgIfSGTypes | The value of vRtrPimNgIfSGTypes indicates the number of entries in vRtrPimNgIfGrpSrcTable for which vRtrPimNgIfGrpSrcType is 'sg'. |
| starGTypes | long | vRtrPimNgIfStarGTypes | The value of vRtrPimNgIfStarGTypes indicates the number of entries in vRtrPimNgIfGrpSrcTable for which vRtrPimNgIfGrpSrcType is 'starG'. |
| starStarRPTypes | long | vRtrPimNgIfStarStarRPTypes | The value of vRtrPimNgIfStarStarRPTypes indicates the number of entries in vRtrPimNgIfGrpSrcTable for which vRtrPimNgIfGrpSrcType is 'starStarRP'. |
| txAsserts | long | vRtrPimNgIfTxAsserts | The value of vRtrPimNgIfTxAsserts indicates the number of PIM Assert messages transmitted on this interface. |
| txHellos | long | vRtrPimNgIfTxHellos | The value of vRtrPimNgIfTxHellos indicates the number of PIM Hello messages transmitted on this interface. |
| txPkts | long | vRtrPimNgIfTxPkts | The value of vRtrPimNgIfTxPkts indicates the number of multicast data packets transmitted on this interface. |
| **PimGenSiteStats**<br>MIB table name: TIMETRA-PIM-NG-MIB.vRtrPimNgGenStatTable<br>Monitored classes:<br>• pim.Site<br>• pim.SiteExtension | | | |
| forwardCrpaDrops | long | vRtrPimNgGenStatFwdCrpaDrops | The value of vRtrPimNgGenStatFwdCrpaDrops indicates the number of times the Candidate-RP Advertizements(C-RP-Adv) could not be forwarded by the router. |
| forwardCrpaPdus | long | vRtrPimNgGenStatForwardCrpaPdus | The value of vRtrPimNgGenStatForwardCrpaPdus indicates the number of Candidate-RP Advertizements(C-RP-Adv) that were forwarded by the router. C-RP-Adv's are forwarded when the received advertizement has a router alert set and the destination address is not the router's local address. |

**(4 of 7)**

| 5620 SAM counter name | Type | MIB counter name | Description |
|---|---|---|---|
| rxActiveMdts | long | vRtrPimNgGenStatRxActiveMdts | The value of vRtrPimNgGenStatRxActiveMdts indicates number of active Mdts on which the PE is receiving packets. This object is applicable to VPRNs only. |
| rxCrpaPduDrops | long | vRtrPimNgGenStatRxCrpaPduDrops | The value of vRtrPimNgGenStatRxCrpaPduDrops indicates the number of PIM Candidate-RP Advertizements (C-RP-Adv) received by this instance, but were dropped. |
| rxCrpaPdus | long | vRtrPimNgGenStatRxCrpaPdus | The value of vRtrPimNgGenStatRxCrpaPdus indicates the number of PIM Candidate-RP Advertizements (C-RP-Adv) received by this instance. |
| rxMdtJoinTlvErrs | long | vRtrPimNgGenStatRxMdtJnTlvErrs | The value of vRtrPimNgGenStatRxMdtJnTlvErrs indicates indicates number of times MDT Join TLVs were dropped due to errors in the received TLV. |
| rxMdtJoinTlvs | long | vRtrPimNgGenStatRxMdtJoinTlvs | The value of vRtrPimNgGenStatRxMdtJoinTlvs indicates the number of times MDT Join TLV were received. |
| sgTypes | long | vRtrPimNgGenStatSGTypes | The value of vRtrPimNgGenStatSGTypes indicates the number of entries in vRtrPimNgGrpSrcTable for which vRtrPimNgGrpSrcType is 'sg'. |
| starGTypes | long | vRtrPimNgGenStatStarGTypes | The value of vRtrPimNgGenStatStarGTypes indicates the number of entries in vRtrPimNgGrpSrcTable for which vRtrPimNgGrpSrcType is 'starG'. |
| starStarRPTypes | long | vRtrPimNgGenStatStarStarRPTypes | The value of vRtrPimNgGenStatStarStarRPTypes indicates the number of entries in vRtrPimNgGrpSrcTable for which vRtrPimNgGrpSrcType is 'starStarRP'. |
| txActiveMdts | long | vRtrPimNgGenStatTxActiveMdts | The value of vRtrPimNgGenStatTxActiveMdts indicates the number of active MDTs on which the PE is forwarding packets. This object is applicable to VPRNs only. |
| txCrpaPduErrs | long | vRtrPimNgGenStatTxCrpaPduErrs | The value of vRtrPimNgGenStatTxCrpaPduErrs indicates the number of errors while transmitting PIM Candidate-RP Advertizements (C-RP-Adv). |
| txCrpaPdus | long | vRtrPimNgGenStatTxCrpaPdus | The value of vRtrPimNgGenStatTxCrpaPdus indicates the number of PIM Candidate-RP Advertisements (C-RP-Adv) transmitted by this router instance. |

**(5 of 7)**

| 5620 SAM counter name | Type | MIB counter name | Description |
|---|---|---|---|
| txMdtJoinTlvErrs | long | vRtrPimNgGenStatTxMdtJnTlvErrs | The value of vRtrPimNgGenStatTxMdtJnTlvErrs indicates indicates the number of times MDT Join TLV could not be transmitted. |
| txMdtJoinTlvs | long | vRtrPimNgGenStatTxMdtJoinTlvs | The value of vRtrPimNgGenStatTxMdtJoinTlvs indicates the number of times MDT Join TLV were transmitted. |
| txNullRegisters | long | vRtrPimNgGenStatTxNullRegisters | The value of vRtrPimNgGenStatTxNullRegisters indicates the number of PIM Null Register messages transmitted by this instance. |
| txRegisterErrs | long | vRtrPimNgGenStatTxRegisterErrs | The value of vRtrPimNgGenStatTxRegisterErrs indicates the number the times there was an error while transmitting PIM Register messages by this instance. |
| txRegisters | long | vRtrPimNgGenStatTxRegisters | The value of vRtrPimNgGenStatTxRegisters indicates the number of PIM Register messages transmitted by this instance. |
| txRegisterTTLDrops | long | vRtrPimNgGenStatTxRegTTLDrops | The value of vRtrPimNgGenStatTxRegTTLDrops indicates the number of multicast data packets which could not be encapsulated in Register messages because the Time To Live (TTL) was zero. |
| **PimGroupStats**<br>MIB table name: TIMETRA-PIM-NG-MIB.vRtrPimNgGrpSrcStatTable<br>Monitored class: pim.Groups | | | |
| discardedPkts | UINT128 | vRtrPimNgGrpSrcStatDscrdPkts | The value of vRtrPimNgGrpSrcStatDscrdPkts indicates the number of multicast packets that matched this source group entry but were discarded. For (S,G) entries, if the traffic is getting forwarded on the SPT, the packets arriving from the RPT will be discarded. |
| forwardedOctets | UINT128 | vRtrPimNgGrpSrcStatFrdedOct | The value of vRtrPimNgGrpSrcStatFrdedOct indicates the number of multicast octets that were forwarded to the interfaces in the outgoing interface list. vRtrPimNgGrpSrcIfTable lists all the interfaces in the outgoing interface list. |
| forwardedPkts | UINT128 | vRtrPimNgGrpSrcStatFrwdedPkts | The value of vRtrPimNgGrpSrcStatFrwdedPkts indicates the number of multicast packets that were forwarded to the interfaces in the outgoing interface list. vRtrPimNgGrpSrcIfTable lists all the interfaces in the outgoing interface list. |

**(6 of 7)**

| 5620 SAM counter name | Type | MIB counter name | Description |
|---|---|---|---|
| rpfMismatches | UINT128 | vRtrPimNgGrpSrcStatRPFMsmtch | The value of vRtrPimNgGrpSrcStatRPFMsmtch indicates the number of multicast packets that matched this source group entry but they did not arrive on the the interface indicated by vRtrPimNgGrpSrcRpfIfIndex. |

**(7 of 7)**

### Table A-38 ppp statistics

| 5620 SAM counter name | Type | MIB counter name | Description |
|---|---|---|---|
| **PppStats**<br>MIB table name: TIMETRA-PPP-MIB.tmnxPppTable<br>Monitored class: ppp.Interface | | | |
| keepaliveEchoReplyPacketsReceived | long | tmnxPppKaInPktCount | The number of echo-reply packets received. |
| keepaliveEchoRequestPacketsSent | long | tmnxPppKaOutPktCount | The number of echo-request packets sent. |
| keepaliveThresholdExceedsCount | long | tmnxPppKaThresholdExceedsCount | The number of times that tmnxPppKaDropCount was reached. |
| lqmInRate | long | tmnxPppLqmInRate | The average of 'SaveInPackets'/'PeerOutPackets' in the last five consecutive LQRs received. |
| lqmLqrPacketsReceived | long | tmnxPppLqmInPktCount | The number of LQR packets received. |
| lqmLqrPacketsSent | long | tmnxPppLqmOutPktCount | The number of LQR packets sent. |
| lqmOutRate | long | tmnxPppLqmOutRate | The average of 'PeerInPackets'/'LastOutPackets' in the last five consecutive LQRs received. |
| lqmThresholdExceedsCount | long | tmnxPppLqmThresholdExceedsCount | The number of times that either tmnxPppLqmInRate or tmnxPppLqmOutRate falls below the specified quality percentage when PPP quality or LQM is enforced. |

### Table A-39 radiusaccounting statistics

| 5620 SAM counter name | Type | MIB counter name | Description |
|---|---|---|---|
| **PolicyStats**<br>MIB table name: TIMETRA-SUBSCRIBER-MGMT-MIB.tmnxSubAcctPlcyStatsTable<br>Monitored class: radiusaccounting.Policy | | | |
| receiveResponses | long | tmnxSubAcctPlcyRxResponses | The value of tmnxSubAcctPlcyRxResponses indicates the number of accounting responses received for this policy. |

**(1 of 2)**

| 5620 SAM counter name | Type | MIB counter name | Description |
|---|---|---|---|
| requestRetries | long | tmnxSubAcctPlcySendRetries | The value of tmnxSubAcctPlcySendRetries indicates the number of retries to a different server for a single accounting request for this policy. |
| requestsFail | long | tmnxSubAcctPlcySendFail | The value of tmnxSubAcctPlcySendFail indicates how many accounting requests failed because the packet could not be sent out. |
| requestTimeOut | long | tmnxSubAcctPlcyReqTimeouts | The value of tmnxSubAcctPlcyReqTimeouts indicates the number of accounting requests which have timed out for this policy. |
| transferRequests | long | tmnxSubAcctPlcyTxRequests | The value of tmnxSubAcctPlcyTxRequests indicates the number of accounting requests transmitted for this policy. |
| **RadiusEntryStats**<br>MIB table name: TIMETRA-SUBSCRIBER-MGMT-MIB.tmnxSubAcctPlcyRadStatsTable<br>Monitored class: radiusaccounting.RadiusEntry | | | |
| receiveResponses | long | tmnxSubAcctPlcyRadRxResponses | The value of tmnxSubAcctPlcyRadRxResponses indicates the number of accounting responses received for this server. |
| requestsFail | long | tmnxSubAcctPlcyRadReqSendFail | The value of tmnxSubAcctPlcyRadReqSendFail indicates the number of accounting requests failed because the packet could not be sent out. |
| requestTimeOut | long | tmnxSubAcctPlcyRadReqTimeouts | The value of tmnxSubAcctPlcyRadReqTimeouts indicates the number of accounting requests which have timed out for this server. |
| transferRequests | long | tmnxSubAcctPlcyRadTxRequests | The value of tmnxSubAcctPlcyRadTxRequests indicates the number of accounting requests transmitted for this server. |

**(2 of 2)**

### Table A-40 ressubscr statistics

| 5620 SAM counter name | Type | MIB counter name | Description |
|---|---|---|---|
| **BsxSubCustRecAppGrpStats**<br>MIB table name: TIMETRA-BSX-NG-MIB.tmnxBsxStatAaSubTable<br>Monitored class: ressubscr.ResidentialSubscriberInstance | | | |
| activeFlowsFromSub | long | tmnxBsxStatAaSubActFlwsFmSb | The value of tmnxBsxStatAaSubActFlwsFmSb indicates the number of allowed flows in the subscriber to network direction that are active. |

**(1 of 19)**

| 5620 SAM counter name | Type | MIB counter name | Description |
|---|---|---|---|
| activeFlowsToSub | long | tmnxBsxStatAaSubActFlwsToSb | The value of tmnxBsxStatAaSubActFlwsToSb indicates the number of allowed flows in the network to subscriber direction that are active. |
| appGrpName | String | tmnxBsxStatAaName | The value of tmnxBsxStatAaName specifies either the ISA-AA protocol, application or app-group name for which statistics are requested. The tmnxBsxStatAaType is used to determine the statistics type. |
| durationFlowsLong | UINT128 | tmnxBsxStatAaSubHCLngDurFlws | The value of tmnxBsxStatAaSubHCLngDurFlws indicates the total number of flows with a duration greater than 180 seconds, that have completed. This object is a 64-bit version of tmnxBsxStatAaSubLngDurFlws. |
| durationFlowsMedium | UINT128 | tmnxBsxStatAaSubHCMedDurFlws | The value of tmnxBsxStatAaSubHCMedDurFlws indicates the total number of flows with a duration less than or equal to 180 seconds, but greater than 30 seconds, that have completed. This object is a 64-bit version of tmnxBsxStatAaSubMedDurFlws. |
| durationFlowsShort | UINT128 | tmnxBsxStatAaSubHCShrtDurFlws | The value of tmnxBsxStatAaSubHCShrtDurFlws indicates the total number of flows with a duration less than or equal to 30 seconds, that have completed. This object is a 64-bit version of tmnxBsxStatAaSubShrtDurFlws. |
| flowsAdmitFromSub | UINT128 | tmnxBsxStatAaSubHCFlwsAdmFmSb | The value of tmnxBsxStatAaSubHCFlwsAdmFmSb indicates the total number of flows permitted for the subscriber to network direction. This object is a 64-bit version of tmnxBsxStatAaSubFlwsAdmFmSb. |
| flowsAdmitToSub | UINT128 | tmnxBsxStatAaSubHCFlwsAdmToSb | The value of tmnxBsxStatAaSubHCFlwsAdmToSb indicates the total number of flows permitted for the network to subscriber direction. This object is a 64-bit version of tmnxBsxStatAaSubFlwsAdmToSb. |
| flowsDenyFromSub | UINT128 | tmnxBsxStatAaSubHCFlwsDnyFmSb | The value of tmnxBsxStatAaSubHCFlwsDnyFmSb indicates the total number of flows that dropped subsequent packets in the subscriber to network direction. This object is a 64-bit version of tmnxBsxStatAaSubFlwsDnyFmSb. |
| flowsDenyToSub | UINT128 | tmnxBsxStatAaSubHCFlwsDnyToSb | The value of tmnxBsxStatAaSubHCFlwsDnyToSb indicates the total number of flows that dropped subsequent packets in the network to subscriber direction. This object is the 64-bit version of tmnxBsxStatAaSubFlwsDnyToSb. |

**(2 of 19)**

| 5620 SAM counter name | Type | MIB counter name | Description |
|---|---|---|---|
| octsAdmitFromSub | UINT128 | tmnxBsxStatAaSubHCOctsAdmFmSb | The value of tmnxBsxStatAaSubHCOctsAdmFmSb indicates the total number of bytes permitted for the subscriber to network direction. This object is a 64-bit version of tmnxBsxStatAaSubOctsAdmFmSb. |
| octsAdmitToSub | UINT128 | tmnxBsxStatAaSubHCOctsAdmToSb | The value of tmnxBsxStatAaSubHCOctsAdmToSb indicates the total number of bytes permitted for the network to subscriber direction. This object is a 64-bit version of tmnxBsxStatAaSubOctsAdmToSb. |
| octsDenyFromSub | UINT128 | tmnxBsxStatAaSubHCOctsDnyFmSb | The value of tmnxBsxStatAaSubHCOctsDnyFmSb indicates the total number of bytes dropped for the subscriber to network direction. This object is a 64-bit version of tmnxBsxStatAaSubOctsDnyFmSb. |
| octsDenyToSub | UINT128 | tmnxBsxStatAaSubHCOctsDnyToSb | The value of tmnxBsxStatAaSubHCOctsDnyToSb indicates the total number of bytes dropped for the network to subscriber direction. This object is a 64-bit version of tmnxBsxStatAaSubOctsDnyToSb. |
| pktsAdmitFromSub | UINT128 | tmnxBsxStatAaSubHCPktsAdmFmSb | The value of tmnxBsxStatAaSubHCPktsAdmFmSb indicates the total number of packets permitted for the subscriber to network direction. This object is a 64-bit version of tmnxBsxStatAaSubPktsAdmFmSb. |
| pktsAdmitToSub | UINT128 | tmnxBsxStatAaSubHCPktsAdmToSb | The value of tmnxBsxStatAaSubHCPktsAdmToSb indicates the total number of packets permitted for the network to subscriber direction. This object is a 64-bit version of tmnxBsxStatAaSubPktsAdmToSb. |
| pktsDenyFromSub | UINT128 | tmnxBsxStatAaSubHCPktsDnyFmSb | The value of tmnxBsxStatAaSubHCPktsDnyFmSb indicates the total number of packets dropped for the subscriber to network direction. This object is a 64-bit version of tmnxBsxStatAaSubPktsDnyFmSb. |
| pktsDenyToSub | UINT128 | tmnxBsxStatAaSubHCPktsDnyToSb | The value of tmnxBsxStatAaSubHCPktsDnyToSb indicates the total number of packets dropped for the network to subscriber direction. This object is a 64-bit version of tmnxBsxStatAaSubPktsDnyToSb. |
| statsInterval | int | tmnxBsxAaSubStatsInterval | The tmnxBsxAaSubStatsInterval specifies the interval for the retrieval of application assurance subscriber statistics. |

**(3 of 19)**

| 5620 SAM counter name | Type | MIB counter name | Description |
|---|---|---|---|
| termFlowDuration | UINT128 | tmnxBsxStatAaSubHCTermFlwDur | The value of tmnxBsxStatAaSubHCTermFlwDur indicates the sum of all flow durations from first packet seen to last packet seen for flows that have terminated. This object is a 64-bit version of tmnxBsxStatAaSubTermFlwDur. |
| termFlows | UINT128 | tmnxBsxStatAaSubHCTermFlws | The value of tmnxBsxStatAaSubHCTermFlws indicates the total number of allowed flows that have terminated. This object is a 64-bit version of tmnxBsxStatAaSubTermFlws. |
| **BsxSubCustRecAppStats**<br>MIB table name: TIMETRA-BSX-NG-MIB.tmnxBsxStatAaSubTable<br>Monitored class: ressubscr.ResidentialSubscriberInstance | | | |
| activeFlowsFromSub | long | tmnxBsxStatAaSubActFlwsFmSb | The value of tmnxBsxStatAaSubActFlwsFmSb indicates the number of allowed flows in the subscriber to network direction that are active. |
| activeFlowsToSub | long | tmnxBsxStatAaSubActFlwsToSb | The value of tmnxBsxStatAaSubActFlwsToSb indicates the number of allowed flows in the network to subscriber direction that are active. |
| durationFlowsLong | UINT128 | tmnxBsxStatAaSubHCLngDurFlws | The value of tmnxBsxStatAaSubHCLngDurFlws indicates the total number of flows with a duration greater than 180 seconds, that have completed. This object is a 64-bit version of tmnxBsxStatAaSubLngDurFlws. |
| durationFlowsMedium | UINT128 | tmnxBsxStatAaSubHCMedDurFlws | The value of tmnxBsxStatAaSubHCMedDurFlws indicates the total number of flows with a duration less than or equal to 180 seconds, but greater than 30 seconds, that have completed. This object is a 64-bit version of tmnxBsxStatAaSubMedDurFlws. |
| durationFlowsShort | UINT128 | tmnxBsxStatAaSubHCShrtDurFlws | The value of tmnxBsxStatAaSubHCShrtDurFlws indicates the total number of flows with a duration less than or equal to 30 seconds, that have completed. This object is a 64-bit version of tmnxBsxStatAaSubShrtDurFlws. |
| flowsAdmitFromSub | UINT128 | tmnxBsxStatAaSubHCFlwsAdmFmSb | The value of tmnxBsxStatAaSubHCFlwsAdmFmSb indicates the total number of flows permitted for the subscriber to network direction. This object is a 64-bit version of tmnxBsxStatAaSubFlwsAdmFmSb. |

**(4 of 19)**

| 5620 SAM counter name | Type | MIB counter name | Description |
|---|---|---|---|
| flowsAdmitToSub | UINT128 | tmnxBsxStatAaSubHCFlwsAdmToSb | The value of tmnxBsxStatAaSubHCFlwsAdmToSb indicates the total number of flows permitted for the network to subscriber direction. This object is a 64-bit version of tmnxBsxStatAaSubFlwsAdmToSb. |
| flowsDenyFromSub | UINT128 | tmnxBsxStatAaSubHCFlwsDnyFmSb | The value of tmnxBsxStatAaSubHCFlwsDnyFmSb indicates the total number of flows that dropped subsequent packets in the subscriber to network direction. This object is a 64-bit version of tmnxBsxStatAaSubFlwsDnyFmSb. |
| flowsDenyToSub | UINT128 | tmnxBsxStatAaSubHCFlwsDnyToSb | The value of tmnxBsxStatAaSubHCFlwsDnyToSb indicates the total number of flows that dropped subsequent packets in the network to subscriber direction. This object is the 64-bit version of tmnxBsxStatAaSubFlwsDnyToSb. |
| octsAdmitFromSub | UINT128 | tmnxBsxStatAaSubHCOctsAdmFmSb | The value of tmnxBsxStatAaSubHCOctsAdmFmSb indicates the total number of bytes permitted for the subscriber to network direction. This object is a 64-bit version of tmnxBsxStatAaSubOctsAdmFmSb. |
| octsAdmitToSub | UINT128 | tmnxBsxStatAaSubHCOctsAdmToSb | The value of tmnxBsxStatAaSubHCOctsAdmToSb indicates the total number of bytes permitted for the network to subscriber direction. This object is a 64-bit version of tmnxBsxStatAaSubOctsAdmToSb. |
| octsDenyFromSub | UINT128 | tmnxBsxStatAaSubHCOctsDnyFmSb | The value of tmnxBsxStatAaSubHCOctsDnyFmSb indicates the total number of bytes dropped for the subscriber to network direction. This object is a 64-bit version of tmnxBsxStatAaSubOctsDnyFmSb. |
| octsDenyToSub | UINT128 | tmnxBsxStatAaSubHCOctsDnyToSb | The value of tmnxBsxStatAaSubHCOctsDnyToSb indicates the total number of bytes dropped for the network to subscriber direction. This object is a 64-bit version of tmnxBsxStatAaSubOctsDnyToSb. |
| pktsAdmitFromSub | UINT128 | tmnxBsxStatAaSubHCPktsAdmFmSb | The value of tmnxBsxStatAaSubHCPktsAdmFmSb indicates the total number of packets permitted for the subscriber to network direction. This object is a 64-bit version of tmnxBsxStatAaSubPktsAdmFmSb. |
| pktsAdmitToSub | UINT128 | tmnxBsxStatAaSubHCPktsAdmToSb | The value of tmnxBsxStatAaSubHCPktsAdmToSb indicates the total number of packets permitted for the network to subscriber direction. This object is a 64-bit version of tmnxBsxStatAaSubPktsAdmToSb. |

**(5 of 19)**

| 5620 SAM counter name | Type | MIB counter name | Description |
|---|---|---|---|
| pktsDenyFromSub | UINT128 | tmnxBsxStatAaSubHCPktsDnyFmSb | The value of tmnxBsxStatAaSubHCPktsDnyFmSb indicates the total number of packets dropped for the subscriber to network direction. This object is a 64-bit version of tmnxBsxStatAaSubPktsDnyFmSb. |
| pktsDenyToSub | UINT128 | tmnxBsxStatAaSubHCPktsDnyToSb | The value of tmnxBsxStatAaSubHCPktsDnyToSb indicates the total number of packets dropped for the network to subscriber direction. This object is a 64-bit version of tmnxBsxStatAaSubPktsDnyToSb. |
| statsInterval | int | tmnxBsxAaSubStatsInterval | The tmnxBsxAaSubStatsInterval specifies the interval for the retrieval of application assurance subscriber statistics. |
| termFlowDuration | UINT128 | tmnxBsxStatAaSubHCTermFlwDur | The value of tmnxBsxStatAaSubHCTermFlwDur indicates the sum of all flow durations from first packet seen to last packet seen for flows that have terminated. This object is a 64-bit version of tmnxBsxStatAaSubTermFlwDur. |
| termFlows | UINT128 | tmnxBsxStatAaSubHCTermFlws | The value of tmnxBsxStatAaSubHCTermFlws indicates the total number of allowed flows that have terminated. This object is a 64-bit version of tmnxBsxStatAaSubTermFlws. |
| **BsxSubCustRecProtStats**<br>MIB table name: TIMETRA-BSX-NG-MIB.tmnxBsxStatAaSubTable<br>Monitored class: ressubscr.ResidentialSubscriberInstance | | | |
| activeFlowsFromSub | long | tmnxBsxStatAaSubActFlwsFmSb | The value of tmnxBsxStatAaSubActFlwsFmSb indicates the number of allowed flows in the subscriber to network direction that are active. |
| activeFlowsToSub | long | tmnxBsxStatAaSubActFlwsToSb | The value of tmnxBsxStatAaSubActFlwsToSb indicates the number of allowed flows in the network to subscriber direction that are active. |
| durationFlowsLong | UINT128 | tmnxBsxStatAaSubHCLngDurFlws | The value of tmnxBsxStatAaSubHCLngDurFlws indicates the total number of flows with a duration greater than 180 seconds, that have completed. This object is a 64-bit version of tmnxBsxStatAaSubLngDurFlws. |
| durationFlowsMedium | UINT128 | tmnxBsxStatAaSubHCMedDurFlws | The value of tmnxBsxStatAaSubHCMedDurFlws indicates the total number of flows with a duration less than or equal to 180 seconds, but greater than 30 seconds, that have completed. This object is a 64-bit version of tmnxBsxStatAaSubMedDurFlws. |

**(6 of 19)**

| 5620 SAM counter name | Type | MIB counter name | Description |
|---|---|---|---|
| durationFlowsShort | UINT128 | tmnxBsxStatAaSubHCShrtDurFlws | The value of tmnxBsxStatAaSubHCShrtDurFlws indicates the total number of flows with a duration less than or equal to 30 seconds, that have completed. This object is a 64-bit version of tmnxBsxStatAaSubShrtDurFlws. |
| flowsAdmitFromSub | UINT128 | tmnxBsxStatAaSubHCFlwsAdmFmSb | The value of tmnxBsxStatAaSubHCFlwsAdmFmSb indicates the total number of flows permitted for the subscriber to network direction. This object is a 64-bit version of tmnxBsxStatAaSubFlwsAdmFmSb. |
| flowsAdmitToSub | UINT128 | tmnxBsxStatAaSubHCFlwsAdmToSb | The value of tmnxBsxStatAaSubHCFlwsAdmToSb indicates the total number of flows permitted for the network to subscriber direction. This object is a 64-bit version of tmnxBsxStatAaSubFlwsAdmToSb. |
| flowsDenyFromSub | UINT128 | tmnxBsxStatAaSubHCFlwsDnyFmSb | The value of tmnxBsxStatAaSubHCFlwsDnyFmSb indicates the total number of flows that dropped subsequent packets in the subscriber to network direction. This object is a 64-bit version of tmnxBsxStatAaSubFlwsDnyFmSb. |
| flowsDenyToSub | UINT128 | tmnxBsxStatAaSubHCFlwsDnyToSb | The value of tmnxBsxStatAaSubHCFlwsDnyToSb indicates the total number of flows that dropped subsequent packets in the network to subscriber direction. This object is the 64-bit version of tmnxBsxStatAaSubFlwsDnyToSb. |
| octsAdmitFromSub | UINT128 | tmnxBsxStatAaSubHCOctsAdmFmSb | The value of tmnxBsxStatAaSubHCOctsAdmFmSb indicates the total number of bytes permitted for the subscriber to network direction. This object is a 64-bit version of tmnxBsxStatAaSubOctsAdmFmSb. |
| octsAdmitToSub | UINT128 | tmnxBsxStatAaSubHCOctsAdmToSb | The value of tmnxBsxStatAaSubHCOctsAdmToSb indicates the total number of bytes permitted for the network to subscriber direction. This object is a 64-bit version of tmnxBsxStatAaSubOctsAdmToSb. |
| octsDenyFromSub | UINT128 | tmnxBsxStatAaSubHCOctsDnyFmSb | The value of tmnxBsxStatAaSubHCOctsDnyFmSb indicates the total number of bytes dropped for the subscriber to network direction. This object is a 64-bit version of tmnxBsxStatAaSubOctsDnyFmSb. |
| octsDenyToSub | UINT128 | tmnxBsxStatAaSubHCOctsDnyToSb | The value of tmnxBsxStatAaSubHCOctsDnyToSb indicates the total number of bytes dropped for the network to subscriber direction. This object is a 64-bit version of tmnxBsxStatAaSubOctsDnyToSb. |

**(7 of 19)**

| 5620 SAM counter name | Type | MIB counter name | Description |
|---|---|---|---|
| pktsAdmitFromSub | UINT128 | tmnxBsxStatAaSubHCPktsAdmFmSb | The value of tmnxBsxStatAaSubHCPktsAdmFmSb indicates the total number of packets permitted for the subscriber to network direction. This object is a 64-bit version of tmnxBsxStatAaSubPktsAdmFmSb. |
| pktsAdmitToSub | UINT128 | tmnxBsxStatAaSubHCPktsAdmToSb | The value of tmnxBsxStatAaSubHCPktsAdmToSb indicates the total number of packets permitted for the network to subscriber direction. This object is a 64-bit version of tmnxBsxStatAaSubPktsAdmToSb. |
| pktsDenyFromSub | UINT128 | tmnxBsxStatAaSubHCPktsDnyFmSb | The value of tmnxBsxStatAaSubHCPktsDnyFmSb indicates the total number of packets dropped for the subscriber to network direction. This object is a 64-bit version of tmnxBsxStatAaSubPktsDnyFmSb. |
| pktsDenyToSub | UINT128 | tmnxBsxStatAaSubHCPktsDnyToSb | The value of tmnxBsxStatAaSubHCPktsDnyToSb indicates the total number of packets dropped for the network to subscriber direction. This object is a 64-bit version of tmnxBsxStatAaSubPktsDnyToSb. |
| statsInterval | int | tmnxBsxAaSubStatsInterval | The tmnxBsxAaSubStatsInterval specifies the interval for the retrieval of application assurance subscriber statistics. |
| termFlowDuration | UINT128 | tmnxBsxStatAaSubHCTermFlwDur | The value of tmnxBsxStatAaSubHCTermFlwDur indicates the sum of all flow durations from first packet seen to last packet seen for flows that have terminated. This object is a 64-bit version of tmnxBsxStatAaSubTermFlwDur. |
| termFlows | UINT128 | tmnxBsxStatAaSubHCTermFlws | The value of tmnxBsxStatAaSubHCTermFlws indicates the total number of allowed flows that have terminated. This object is a 64-bit version of tmnxBsxStatAaSubTermFlws. |
| **BsxSubStudyAppStats**<br>MIB table name: TIMETRA-BSX-NG-MIB.tmnxBsxStatAaSubSdyTable<br>Monitored class: ressubscr.ResidentialSubscriberInstance | | | |
| activeFlowsFromSub | long | tmnxBsxStatAaSubSdyActFlwsFmSb | The value of tmnxBsxStatAaSubSdyActFlwsFmSb indicates the number of allowed flows in the subscriber to network direction that are active. |
| activeFlowsToSub | long | tmnxBsxStatAaSubSdyActFlwsToSb | The value of tmnxBsxStatAaSubSdyActFlwsToSb indicates the number of allowed flows in the network to subscriber direction that are active. |

**(8 of 19)**

| 5620 SAM counter name | Type | MIB counter name | Description |
|---|---|---|---|
| durationFlowsLong | UINT128 | tmnxBsxStatAaSubSdyHCLngDurFlws | The value of tmnxBsxStatAaSubSdyHCLngDurFlws indicates the total number of flows with a duration greater than 180 seconds, that have completed. This object is a 64-bit version of tmnxBsxStatAaSubSdyLngDurFlws. |
| durationFlowsMedium | UINT128 | tmnxBsxStatAaSubSdyHCMedDurFlws | The value of tmnxBsxStatAaSubSdyHCMedDurFlws indicates the total number of flows with a duration less than or equal to 180 seconds, but greater than 30 seconds, that have completed. This object is a 64-bit version of tmnxBsxStatAaSubSdyMedDurFlws. |
| durationFlowsShort | UINT128 | tmnxBsxStatAaSubSdyHCShrtDurFlws | The value of tmnxBsxStatAaSubSdyHCShrtDurFlws indicates the total number of flows with a duration less than or equal to 30 seconds, that have completed. This object is a 64-bit version of tmnxBsxStatAaSubSdyShrtDurFlws. |
| flowsAdmitFromSub | UINT128 | tmnxBsxStatAaSubSdyHCFlwsAdmFmSb | The value of tmnxBsxStatAaSubSdyHCFlwsAdmFmSb indicates the total number of flows permitted for the subscriber to network direction. This object is a 64-bit version of tmnxBsxStatAaSubSdyFlwsAdmFmSb. |
| flowsAdmitToSub | UINT128 | tmnxBsxStatAaSubSdyHCFlwsAdmToSb | The value of tmnxBsxStatAaSubSdyHCFlwsAdmToSb indicates the total number of flows permitted for the network to subscriber direction. This object is a 64-bit version of tmnxBsxStatAaSubSdyFlwsAdmToSb. |
| flowsDenyFromSub | UINT128 | tmnxBsxStatAaSubSdyHCFlwsDnyFmSb | The value of tmnxBsxStatAaSubSdyHCFlwsDnyFmSb indicates the total number of flows that dropped subsequent packets in the subscriber to network direction. This object is a 64-bit version of tmnxBsxStatAaSubSdyFlwsDnyFmSb. |
| flowsDenyToSub | UINT128 | tmnxBsxStatAaSubSdyHCFlwsDnyToSb | The value of tmnxBsxStatAaSubSdyHCFlwsDnyToSb indicates the total number of flows that dropped subsequent packets in the network to subscriber direction. This object is a 64-bit version of tmnxBsxStatAaSubSdyFlwsDnyToSb. |
| octsAdmitFromSub | UINT128 | tmnxBsxStatAaSubSdyHCOctsAdmFmSb | The value of tmnxBsxStatAaSubSdyHCOctsAdmFmSb indicates the total number of bytes permitted for the subscriber to network direction. This object is a 64-bit version of tmnxBsxStatAaSubSdyOctsAdmFmSb. |
| octsAdmitFromSub | UINT128 | tmnxBsxStatAaSubSdyOctsAdmFmSb | The value of tmnxBsxStatAaSubSdyOctsAdmFmSb indicates the total number of bytes permitted for the subscriber to network direction. |

**(9 of 19)**

| 5620 SAM counter name | Type | MIB counter name | Description |
|---|---|---|---|
| octsAdmitToSub | UINT128 | tmnxBsxStatAaSubSdyHC OctsAdmToSb | The value of tmnxBsxStatAaSubSdyHCOctsAdmToSb indicates the total number of bytes permitted for the network to subscriber direction. This object is a 64-bit version of tmnxBsxStatAaSubSdyOctsAdmToSb. |
| octsDenyFromSub | UINT128 | tmnxBsxStatAaSubSdyHC OctsDnyFmSb | The value of tmnxBsxStatAaSubSdyHCOctsDnyFmSb indicates the total number of bytes dropped for the subscriber to network direction. This object is a 64-bit version of tmnxBsxStatAaSubSdyOctsDnyFmSb. |
| octsDenyToSub | UINT128 | tmnxBsxStatAaSubSdyHC OctsDnyToSb | The value of tmnxBsxStatAaSubSdyHCOctsDnyToSb indicates the total number of bytes dropped for the network to subscriber direction. This object is a 64-bit version of tmnxBsxStatAaSubSdyOctsDnyToSb. |
| pktsAdmitFromSub | UINT128 | tmnxBsxStatAaSubSdyHC PktsAdmFmSb | The value of tmnxBsxStatAaSubSdyHCPktsAdmFmSb indicates the total number of packets permitted for the subscriber to network direction. This object is a 64-bit version of tmnxBsxStatAaSubSdyPktsAdmFmSb. |
| pktsAdmitToSub | UINT128 | tmnxBsxStatAaSubSdyHC PktsAdmToSb | The value of tmnxBsxStatAaSubSdyHCPktsAdmToSb indicates the total number of packets permitted for the network to subscriber direction. This object is a 64-bit version of tmnxBsxStatAaSubSdyPktsAdmToSb. |
| pktsDenyFromSub | UINT128 | tmnxBsxStatAaSubSdyHC PktsDnyFmSb | The value of tmnxBsxStatAaSubSdyHCPktsDnyFmSb indicates the total number of packets dropped for the subscriber to network direction. This object is a 64-bit version of tmnxBsxStatAaSubSdyPktsDnyFmSb. |
| pktsDenyToSub | UINT128 | tmnxBsxStatAaSubSdyHC PktsDnyToSb | The value of tmnxBsxStatAaSubSdyHCPktsDnyToSb indicates the total number of packets dropped for the network to subscriber direction. This object is a 64-bit version of tmnxBsxStatAaSubSdyPktsDnyToSb. |
| termFlowDuration | UINT128 | tmnxBsxStatAaSubSdyHC TermFlwDur | The value of tmnxBsxStatAaSubSdyHCTermFlwDur indicates the sum of all flow durations from first packet seen to last packet seen for flows that have terminated. This object is a 64-bit version of tmnxBsxStatAaSubSdyTermFlwDur. |
| termFlows | UINT128 | tmnxBsxStatAaSubSdyHC TermFlws | The value of tmnxBsxStatAaSubSdyHCTermFlws indicates the total number of allowed flows that have terminated. This object is a 64-bit version of tmnxBsxStatAaSubSdyTermFlws. |

**(10 of 19)**

| 5620 SAM counter name | Type | MIB counter name | Description |
|---|---|---|---|
| **BsxSubStudyProtStats**<br>MIB table name: TIMETRA-BSX-NG-MIB.tmnxBsxStatAaSubSdyTable<br>Monitored class: ressubscr.ResidentialSubscriberInstance | | | |
| activeFlowsFromSub | long | tmnxBsxStatAaSubSdyActFlwsFmSb | The value of tmnxBsxStatAaSubSdyActFlwsFmSb indicates the number of allowed flows in the subscriber to network direction that are active. |
| activeFlowsToSub | long | tmnxBsxStatAaSubSdyActFlwsToSb | The value of tmnxBsxStatAaSubSdyActFlwsToSb indicates the number of allowed flows in the network to subscriber direction that are active. |
| durationFlowsLong | UINT128 | tmnxBsxStatAaSubSdyHCLngDurFlws | The value of tmnxBsxStatAaSubSdyHCLngDurFlws indicates the total number of flows with a duration greater than 180 seconds, that have completed. This object is a 64-bit version of tmnxBsxStatAaSubSdyLngDurFlws. |
| durationFlowsMedium | UINT128 | tmnxBsxStatAaSubSdyHCMedDurFlws | The value of tmnxBsxStatAaSubSdyHCMedDurFlws indicates the total number of flows with a duration less than or equal to 180 seconds, but greater than 30 seconds, that have completed. This object is a 64-bit version of tmnxBsxStatAaSubSdyMedDurFlws. |
| durationFlowsShort | UINT128 | tmnxBsxStatAaSubSdyHCShrtDurFlws | The value of tmnxBsxStatAaSubSdyHCShrtDurFlws indicates the total number of flows with a duration less than or equal to 30 seconds, that have completed. This object is a 64-bit version of tmnxBsxStatAaSubSdyShrtDurFlws. |
| flowsAdmitFromSub | UINT128 | tmnxBsxStatAaSubSdyHCFlwsAdmFmSb | The value of tmnxBsxStatAaSubSdyHCFlwsAdmFmSb indicates the total number of flows permitted for the subscriber to network direction. This object is a 64-bit version of tmnxBsxStatAaSubSdyFlwsAdmFmSb. |
| flowsAdmitToSub | UINT128 | tmnxBsxStatAaSubSdyHCFlwsAdmToSb | The value of tmnxBsxStatAaSubSdyHCFlwsAdmToSb indicates the total number of flows permitted for the network to subscriber direction. This object is a 64-bit version of tmnxBsxStatAaSubSdyFlwsAdmToSb. |
| flowsDenyFromSub | UINT128 | tmnxBsxStatAaSubSdyHCFlwsDnyFmSb | The value of tmnxBsxStatAaSubSdyHCFlwsDnyFmSb indicates the total number of flows that dropped subsequent packets in the subscriber to network direction. This object is a 64-bit version of tmnxBsxStatAaSubSdyFlwsDnyFmSb. |

**(11 of 19)**

| 5620 SAM counter name | Type | MIB counter name | Description |
|---|---|---|---|
| flowsDenyToSub | UINT128 | tmnxBsxStatAaSubSdyHCFlwsDnyToSb | The value of tmnxBsxStatAaSubSdyHCFlwsDnyToSb indicates the total number of flows that dropped subsequent packets in the network to subscriber direction. This object is a 64-bit version of tmnxBsxStatAaSubSdyFlwsDnyToSb. |
| octsAdmitFromSub | UINT128 | tmnxBsxStatAaSubSdyHCOctsAdmFmSb | The value of tmnxBsxStatAaSubSdyHCOctsAdmFmSb indicates the total number of bytes permitted for the subscriber to network direction. This object is a 64-bit version of tmnxBsxStatAaSubSdyOctsAdmFmSb. |
| octsAdmitFromSub | UINT128 | tmnxBsxStatAaSubSdyOctsAdmFmSb | The value of tmnxBsxStatAaSubSdyOctsAdmFmSb indicates the total number of bytes permitted for the subscriber to network direction. |
| octsAdmitToSub | UINT128 | tmnxBsxStatAaSubSdyHCOctsAdmToSb | The value of tmnxBsxStatAaSubSdyHCOctsAdmToSb indicates the total number of bytes permitted for the network to subscriber direction. This object is a 64-bit version of tmnxBsxStatAaSubSdyOctsAdmToSb. |
| octsDenyFromSub | UINT128 | tmnxBsxStatAaSubSdyHCOctsDnyFmSb | The value of tmnxBsxStatAaSubSdyHCOctsDnyFmSb indicates the total number of bytes dropped for the subscriber to network direction. This object is a 64-bit version of tmnxBsxStatAaSubSdyOctsDnyFmSb. |
| octsDenyToSub | UINT128 | tmnxBsxStatAaSubSdyHCOctsDnyToSb | The value of tmnxBsxStatAaSubSdyHCOctsDnyToSb indicates the total number of bytes dropped for the network to subscriber direction. This object is a 64-bit version of tmnxBsxStatAaSubSdyOctsDnyToSb. |
| pktsAdmitFromSub | UINT128 | tmnxBsxStatAaSubSdyHCPktsAdmFmSb | The value of tmnxBsxStatAaSubSdyHCPktsAdmFmSb indicates the total number of packets permitted for the subscriber to network direction. This object is a 64-bit version of tmnxBsxStatAaSubSdyPktsAdmFmSb. |
| pktsAdmitToSub | UINT128 | tmnxBsxStatAaSubSdyHCPktsAdmToSb | The value of tmnxBsxStatAaSubSdyHCPktsAdmToSb indicates the total number of packets permitted for the network to subscriber direction. This object is a 64-bit version of tmnxBsxStatAaSubSdyPktsAdmToSb. |
| pktsDenyFromSub | UINT128 | tmnxBsxStatAaSubSdyHCPktsDnyFmSb | The value of tmnxBsxStatAaSubSdyHCPktsDnyFmSb indicates the total number of packets dropped for the subscriber to network direction. This object is a 64-bit version of tmnxBsxStatAaSubSdyPktsDnyFmSb. |

**(12 of 19)**

| 5620 SAM counter name | Type | MIB counter name | Description |
|---|---|---|---|
| pktsDenyToSub | UINT128 | tmnxBsxStatAaSubSdyHCPktsDnyToSb | The value of tmnxBsxStatAaSubSdyHCPktsDnyToSb indicates the total number of packets dropped for the network to subscriber direction. This object is a 64-bit version of tmnxBsxStatAaSubSdyPktsDnyToSb. |
| protName | String | tmnxBsxStatAaName | The value of tmnxBsxStatAaName specifies either the ISA-AA protocol, application or app-group name for which statistics are requested. The tmnxBsxStatAaType is used to determine the statistics type. |
| termFlowDuration | UINT128 | tmnxBsxStatAaSubSdyHCTermFlwDur | The value of tmnxBsxStatAaSubSdyHCTermFlwDur indicates the sum of all flow durations from first packet seen to last packet seen for flows that have terminated. This object is a 64-bit version of tmnxBsxStatAaSubSdyTermFlwDur. |
| termFlows | UINT128 | tmnxBsxStatAaSubSdyHCTermFlws | The value of tmnxBsxStatAaSubSdyHCTermFlws indicates the total number of allowed flows that have terminated. This object is a 64-bit version of tmnxBsxStatAaSubSdyTermFlws. |
| **HostTrackStats**<br>MIB table name: TIMETRA-SUBSCRIBER-MGMT-MIB.tmnxSubHostTrkStatsTable<br>Monitored class: ressubscr.ResidentialSubscriberInstance | | | |
| sapInnerEncapValue | long | sapEncapValue | — |
| sapPortId | String | sapPortId | — |
| serviceId | long | svcId | — |
| statsType | int | tmnxSubHostTrkStatsType | The value of tmnxSubHostTrkStatsType indicates the type of host tracking statistics contained in tmnxSubHostTrkStatsVal. |
| statsValue | long | tmnxSubHostTrkStatsVal | The value of tmnxSubHostTrkStatsType indicates the value of the host tracking statistics of the type indicated by tmnxSubHostTrkStatsType, for this subscriber host. |
| subscriberHostAddress | String | tmnxSubHostInfoV2IpAddress | The value of tmnxSubHostInfoV2IpAddress specifies the IP address of this subscriber host. |
| subscriberHostAddressType | int | tmnxSubHostInfoV2IpAddressType | The value of tmnxSubHostInfoV2IpAddressType specifies the type of address stored in tmnxSubHostInfoV2IpAddress. |
| subscrIdent | String | tmnxSubInfoSubIdent | The value of tmnxSubInfoSubIdent specifies the subscriber identification of this subscriber. |

**(13 of 19)**

| 5620 SAM counter name | Type | MIB counter name | Description |
|---|---|---|---|
| **HostTrackStatsOnSap**<br>MIB table name: TIMETRA-SUBSCRIBER-MGMT-MIB.tmnxSubHostSapTrkStatsTable<br>Monitored classes:<br>• vpls.AbstractL2AccessInterface<br>• vprn.ServiceAccessPoint<br>• ies.ServiceAccessPoint | | | |
| statsType | int | tmnxSubHostSapTrkStatsType | The value of tmnxSubHostSapTrkStatsType indicates the type of host tracking statistics contained in tmnxSubHostSapTrkStatsVal. |
| statsValue | long | tmnxSubHostSapTrkStatsVal | The value of tmnxSubHostSapTrkStatsType indicates the value of the host tracking statistics of the type indicated by tmnxSubHostSapTrkStatsType, for this host. |
| subscriberHostAddress | String | tmnxSubHostSapTrkHostAddr | The value of tmnxSubHostSapTrkHostAddr indicates the address of the host. |
| subscriberHostAddressType | int | tmnxSubHostSapTrkHostAddrType | The value of tmnxSubHostSapTrkHostAddrType indicates the address type of tmnxSubHostSapTrkHostAddr. |
| **SLAProfInstEgrQStats**<br>MIB table name: TIMETRA-SUBSCRIBER-MGMT-MIB.tmnxSLAProfInstEgrQStatsTable<br>Monitored class: ressubscr.ResidentialSubscriberInstance | | | |
| egrQStatsDropInProfileOctets | UINT128 | tmnxSPIEgrQStatsDropInProfOctets | The value of tmnxSPIEgrQStatsDropInProfOctets indicates the number of in-profile octets discarded by the egress Qchip. |
| egrQStatsDropInProfilePackets | UINT128 | tmnxSPIEgrQStatsDropInProfPkts | The value of tmnxSPIEgrQStatsDropInProfPkts indicates the number of in-profile packets discarded by the egress Qchip. |
| egrQStatsDropOutProfileOctets | UINT128 | tmnxSPIEgrQStatsDropOutProfOctets | The value of tmnxSPIEgrQStatsDropOutProfOctets indicates the number of out-of-profile octets discarded by the egress Qchip. |
| egrQStatsDropOutProfilePackets | UINT128 | tmnxSPIEgrQStatsDropOutProfPkts | The value of tmnxSPIEgrQStatsDropOutProfPkts indicates the number of out-of-profile packets discarded by the egress Qchip. |
| egrQStatsFwdInProfileOctets | UINT128 | tmnxSPIEgrQStatsFwdInProfOctets | The value of tmnxSPIEgrQStatsFwdInProfOctets indicates the number of in-profile octets (rate below CIR) forwarded by the egress Qchip. |
| egrQStatsFwdInProfilePackets | UINT128 | tmnxSPIEgrQStatsFwdInProfPkts | The value of tmnxSPIEgrQStatsFwdInProfPkts indicates the number of in-profile packets (rate below CIR) forwarded by the egress Qchip. |

**(14 of 19)**

| 5620 SAM counter name | Type | MIB counter name | Description |
|---|---|---|---|
| egrQStatsFwdOutProfileOctets | UINT128 | tmnxSPIEgrQStatsFwdOutProfOctets | The value of tmnxSPIEgrQStatsFwdOutProfOctets indicates the number of out-of-profile octets (rate above CIR) forwarded by the egress Qchip. |
| egrQStatsFwdOutProfilePackets | UINT128 | tmnxSPIEgrQStatsFwdOutProfPkts | The value of tmnxSPIEgrQStatsFwdOutProfPkts indicates the number of out-of-profile packets (rate above CIR) forwarded by the egress Qchip. |
| egrQStatsQueueId | long | tmnxSPIEgrQStatsQueueId | The value of tmnxSPIEgrQStatsQueueId specifies the index of the egress QoS queue of this SLA profile instance. |
| slaProfileName | String | tmnxSLAProfName | The value of tmnxSLAProfName specifies the name of the SLA profile. |
| **SLAProfInstIngQStats**<br>MIB table name: TIMETRA-SUBSCRIBER-MGMT-MIB.tmnxSLAProfInstIngQStatsTable<br>Monitored class: ressubscr.ResidentialSubscriberInstance | | | |
| ingQStatsDropHiPriorityOctets | UINT128 | tmnxSPIIngQStatsDropHiPrioOctets | The value of tmnxSPIIngQStatsDropHiPrioOctets indicates the number of high priority octets, as determined by the SLA profile ingress QoS policy, dropped by the Qchip. |
| ingQStatsDropHiPriorityPackets | UINT128 | tmnxSPIIngQStatsDropHiPrioPkts | The value of tmnxSPIIngQStatsDropHiPrioPkts indicates the number of high priority packets, as determined by the SLA profile ingress QoS policy, dropped by the Qchip. |
| ingQStatsDropLoPriorityOctets | UINT128 | tmnxSPIIngQStatsDropLoPrioOctets | The value of tmnxSPIIngQStatsDropLoPrioOctets indicates the number of low priority octets, as determined by the SLA profile ingress QoS policy, dropped by the Qchip. |
| ingQStatsDropLoPriorityPackets | UINT128 | tmnxSPIIngQStatsDropLoPrioPkts | The value of tmnxSPIIngQStatsDropLoPrioPkts indicates the number of low priority packets, as determined by the SLA profile ingress QoS policy, dropped by the Qchip. |
| ingQStatsFwdInProfileOctets | UINT128 | tmnxSPIIngQStatsFwdInProfOctets | The value of tmnxSPIIngQStatsFwdInProfOctets indicates the number of in-profile octets (rate below CIR) forwarded by the ingress Qchip. |
| ingQStatsFwdInProfilePackets | UINT128 | tmnxSPIIngQStatsFwdInProfPkts | The value of tmnxSPIIngQStatsFwdInProfPkts indicates the number of in-profile packets (rate below CIR) forwarded by the ingress Qchip. |
| ingQStatsFwdOutProfileOctets | UINT128 | tmnxSPIIngQStatsFwdOutProfOctets | The value of tmnxSPIIngQStatsFwdOutProfOctets indicates the number of out-of-profile octets (rate above CIR) forwarded by the ingress Qchip. |

**(15 of 19)**

| 5620 SAM counter name | Type | MIB counter name | Description |
|---|---|---|---|
| ingQStatsFwdOutProfilePackets | UINT128 | tmnxSPIIngQStatsFwdOutProfPkts | The value of tmnxSPIIngQStatsFwdOutProfPkts indicates the number of out-of-profile packets (rate above CIR) forwarded by the ingress Qchip. |
| ingQStatsOffHiPriorityOctets | UINT128 | tmnxSPIIngQStatsOffHiPrioOctets | The value of tmnxSPIIngQStatsOffHiPrioOctets indicates the number of high priority octets, as determined by the SLA profile ingress QoS policy, offered by the Pchip to the Qchip. |
| ingQStatsOffHiPriorityPackets | UINT128 | tmnxSPIIngQStatsOffHiPrioPkts | The value of tmnxSPIIngQStatsOffHiPrioPkts indicates the number of high priority packets, as determined by the SLA profile ingress QoS policy, offered by the Pchip to the Qchip. |
| ingQStatsOffLoPriorityOctets | UINT128 | tmnxSPIIngQStatsOffLoPrioOctets | The value of tmnxSPIIngQStatsOffLoPrioOctets indicates the number of low priority octets, as determined by the SLA profile ingress QoS policy, offered by the Pchip to the Qchip. |
| ingQStatsOffLoPriorityPackets | UINT128 | tmnxSPIIngQStatsOffLoPrioPkts | The value of tmnxSPIIngQStatsOffLoPrioPkts indicates the number of low priority packets, as determined by the SLA profile ingress QoS policy, offered by the Pchip to the Qchip. |
| ingQStatsOffUncoloredOctets | UINT128 | tmnxSPIIngQStatsOffUncolOctets | The value of tmnxSPIIngQStatsOffUncolOctets indicates the number of uncolored octets offered to the ingress Qchip. |
| ingQStatsOffUncoloredPackets | UINT128 | tmnxSPIIngQStatsOffUncolPkts | The value of tmnxSPIIngQStatsOffUncolPkts indicates the number of uncolored packets offered to the ingress Qchip. |
| ingQStatsQueueId | long | tmnxSPIIngQStatsQueueId | The value of tmnxSPIIngQStatsQueueId specifies the index of the ingress QoS queue of this SLA profile instance. |
| slaProfileName | String | tmnxSLAProfName | The value of tmnxSLAProfName specifies the name of the SLA profile. |
| **SLAProfInstStats**<br>MIB table name: TIMETRA-SUBSCRIBER-MGMT-MIB.tmnxSLAProfInstStatsTable<br>Monitored class: ressubscr.ResidentialSubscriberInstance | | | |
| egrQchipDropInProfileOctets | UINT128 | tmnxSPIStatsEgrQchipDropInProfOctets | The value of tmnxSPIStatsEgrQchipDropInProfOctets indicates the number of in-profile octets dropped by the egress Qchip. |
| egrQchipDropInProfilePackets | UINT128 | tmnxSPIStatsEgrQchipDropInProfPkts | The value of tmnxSPIStatsEgrQchipDropInProfPkts indicates the number of in-profile packets dropped by the egress Qchip. |
| egrQchipDropOutProfileOctets | UINT128 | tmnxSPIStatsEgrQchipDropOutProfOctets | The value of tmnxSPIStatsEgrQchipDropOutProfOctets indicates the number of out-of-profile octets dropped by the egress Qchip. |

**(16 of 19)**

| 5620 SAM counter name | Type | MIB counter name | Description |
|---|---|---|---|
| egrQchipDropOutProfilePackets | UINT128 | tmnxSPIStatsEgrQchipDropOutProfPkts | The value of tmnxSPIStatsEgrQchipDropOutProfPkts indicates the number of out-of-profile packets dropped by the egress Qchip. |
| egrQchipFwdInProfileOctets | UINT128 | tmnxSPIStatsEgrQchipFwdInProfOctets | The value of tmnxSPIStatsEgrQchipFwdInProfOctets indicates the number of in-profile octets (rate below CIR) forwarded by the egress Qchip. |
| egrQchipFwdInProfilePackets | UINT128 | tmnxSPIStatsEgrQchipFwdInProfPkts | The value of tmnxSPIStatsEgrQchipFwdInProfPkts indicates the number of in-profile packets (rate below CIR) forwarded by the egress Qchip. |
| egrQchipFwdOutProfileOctets | UINT128 | tmnxSPIStatsEgrQchipFwdOutProfOctets | The value of tmnxSPIStatsEgrQchipFwdOutProfOctets indicates the number of out-of-profile octets (rate above CIR) forwarded by the egress Qchip. |
| egrQchipFwdOutProfilePackets | UINT128 | tmnxSPIStatsEgrQchipFwdOutProfPkts | The value of tmnxSPIStatsEgrQchipFwdOutProfPkts indicates the number of out-of-profile packets (rate above CIR) forwarded by the egress Qchip. |
| ingPchipOffHiPriorityOctets | UINT128 | tmnxSPIStatsIngPchipOffHiPrioOctets | The value of tmnxSPIStatsIngPchipOffHiPrioOctets indicates the number of high priority octets as determined by the SLA profile ingress QoS policy, offered by the Pchip to the Qchip. |
| ingPchipOffHiPriorityPackets | UINT128 | tmnxSPIStatsIngPchipOffHiPrioPkts | The value of tmnxSPIStatsIngPchipOffHiPrioPkts indicates the number of high priority packets as determined by the SLA profile ingress QoS policy, offered by the Pchip to the Qchip. |
| ingPchipOffLoPriorityOctets | UINT128 | tmnxSPIStatsIngPchipOffLoPrioOctets | The value of tmnxSPIStatsIngPchipOffLoPrioOctets indicates the number of low priority octets as determined by the SLA profile ingress QoS policy, offered by the Pchip to the Qchip. |
| ingPchipOffLoPriorityPackets | UINT128 | tmnxSPIStatsIngPchipOffLoPrioPkts | The value of tmnxSPIStatsIngPchipOffLoPrioPkts indicates the number of low priority packets as determined by the SLA profile ingress QoS policy, offered by the Pchip to the Qchip. |
| ingPchipOffUncoloredOctets | UINT128 | tmnxSPIStatsIngPchipOffUncolOctets | The value of tmnxSPIStatsIngPchipOffUncolOctets indicates the number of uncolored octets as determined by the SLA profile ingress QoS policy, offered by the Pchip to the Qchip. |

**(17 of 19)**

| 5620 SAM counter name | Type | MIB counter name | Description |
|---|---|---|---|
| ingPchipOffUncoloredPackets | UINT128 | tmnxSPIStatsIngPchipOff UncolPkts | The value of tmnxSPIStatsIngPchipOffUncolPkts indicates the number of uncolored packets as determined by the SLA profile ingress QoS policy, offered by the Pchip to the Qchip. |
| ingQchipDropHiPriorityOctets | UINT128 | tmnxSPIStatsIngQchipDro pHiPrioOctets | The value of tmnxSPIStatsIngQchipDropHiPrioOctets indicates the number of high priority octets as determined by the SLA profile ingress QoS policy, dropped by the Qchip. |
| ingQchipDropHiPriorityPackets | UINT128 | tmnxSPIStatsIngQchipDro pHiPrioPkts | The value of tmnxSPIStatsIngQchipDropHiPrioPkts indicates the number of high priority packets as determined by the SLA profile ingress QoS policy, dropped by the Qchip. |
| ingQchipDropLoPriorityOctets | UINT128 | tmnxSPIStatsIngQchipDro pLoPrioOctets | The value of tmnxSPIStatsIngQchipDropLoPrioOctets indicates the number of low priority octets as determined by the SLA profile ingress QoS policy, dropped by the Qchip. |
| ingQchipDropLoPriorityPackets | UINT128 | tmnxSPIStatsIngQchipDro pLoPrioPkts | The value of tmnxSPIStatsIngQchipDropLoPrioPkts indicates the number of low priority packets as determined by the SLA profile ingress QoS policy, dropped by the Qchip. |
| ingQchipFwdInProfileOctets | UINT128 | tmnxSPIStatsIngQchipFwd InProfOctets | The value of tmnxSPIStatsIngQchipFwdInProfOctets indicates the number of in-profile octets (rate below CIR) forwarded by the ingress Qchip. |
| ingQchipFwdInProfilePackets | UINT128 | tmnxSPIStatsIngQchipFwd InProfPkts | The value of tmnxSPIStatsIngQchipFwdInProfPkts indicates the number of in-profile packets (rate below CIR) forwarded by the ingress Qchip. |
| ingQchipFwdOutProfileOctets | UINT128 | tmnxSPIStatsIngQchipFwd OutProfOctets | The value of tmnxSPIStatsIngQchipFwdOutProfOctets indicates the number of out-of-profile octets (rate above CIR) forwarded by the ingress Qchip. |
| ingQchipFwdOutProfilePackets | UINT128 | tmnxSPIStatsIngQchipFwd OutProfPkts | The value of tmnxSPIStatsIngQchipFwdOutProfPkts indicates the number of out-of-profile packets (rate above CIR) forwarded by the ingress Qchip. |
| slaProfileName | String | tmnxSLAProfName | The value of tmnxSLAProfName specifies the name of the SLA profile. |
| **SubEgrQosSchedStats**<br>MIB table name: TIMETRA-SUBSCRIBER-MGMT-MIB.tmnxSubEgrQosSchedStatsTable<br>Monitored class: ressubscr.ResidentialSubscriberInstance | | | |
| egrQosSchedName | String | tmnxSubEgrQosSchedStat sName | The value of tmnxSubEgrQosSchedStatsName specifies the egress QoS scheduler of this subscriber. |

**(18 of 19)**

| 5620 SAM counter name | Type | MIB counter name | Description |
|---|---|---|---|
| forwardedOctets | UINT128 | tmnxSubEgrQosSchedStatsFwdOctets | The value of tmnxSubEgrQosSchedStatsFwdOctets indicates the number of forwarded octets by the egress Qchip, as determined by the subscriber egress scheduler policy. |
| forwardedPackets | UINT128 | tmnxSubEgrQosSchedStatsFwdPkts | The value of tmnxSubEgrQosSchedStatsFwdPkts indicates the number of forwarded packets by the egress Qchip, as determined by the subscriber egress scheduler policy. |
| **SubIngQosSchedStats**<br>MIB table name: TIMETRA-SUBSCRIBER-MGMT-MIB.tmnxSubIngQosSchedStatsTable<br>Monitored class: ressubscr.ResidentialSubscriberInstance | | | |
| forwardedOctets | UINT128 | tmnxSubIngQosSchedStatsFwdOctets | The value of tmnxSubIngQosSchedStatsFwdOctets indicates the number of forwarded octets, as determined by the subscriber ingress scheduler policy, offered by the Pchip to the Qchip. |
| forwardedPackets | UINT128 | tmnxSubIngQosSchedStatsFwdPkts | The value of tmnxSubIngQosSchedStatsFwdPkts indicates the number of forwarded packets, as determined by the subscriber ingress scheduler policy, offered by the Pchip to the Qchip. |
| ingQosSchedName | String | tmnxSubIngQosSchedStatsName | The value of tmnxSubIngQosSchedStatsName specifies the ingress QoS scheduler of this subscriber. |

**(19 of 19)**

### Table A-41 rip statistics

| 5620 SAM counter name | Type | MIB counter name | Description |
|---|---|---|---|
| **InterfaceReceiveStats**<br>MIB table name: TIMETRA-RIP-MIB.vRtrRipIfStatTable<br>Monitored class: rip.Interface | | | |
| badPackets | long | vRtrRipIfStatAllRcvBadPackets | vRtrRipIfStatAllRcvBadPackets is the number of RIP updates received on this interface that were discarded as invalid. |
| v1BadRoutes | long | vRtrRipIfStatV1BadRoutes | vRtrRipIfStatV1BadRoutes is the number of routes, in valid RIPv1 packets, which were ignored for any reason (e.g. unknown address family, or invalid metric). |
| v1Requests | long | vRtrRipIfStatV1RcvRequests | vRtrRipIfStatV1RcvRequests is the number of RIPv1 request packets received by the RIP process. |
| v1RequestsIgnored | long | vRtrRipIfStatV1BadRequests | vRtrRipIfStatV1BadRequests is the number of RIPv1 request packets received by the RIP process that were subsequently discarded for any reason. |

**(1 of 2)**

| 5620 SAM counter name | Type | MIB counter name | Description |
|---|---|---|---|
| v1Updates | long | vRtrRipIfStatV1RcvUpdates | vRtrRipIfStatV1RcvUpdates is the number of RIPv1 response packets received by the RIP process. |
| v1UpdatesIgnored | long | vRtrRipIfStatV1BadUpdates | vRtrRipIfStatV1BadUpdates is the number of RIPv1 response packets received by the RIP process which were subsequently discarded for any reason. |
| v2AuthenticationErrors | long | vRtrRipIfStatAuthErrors | vRtrRipIfStatAuthErrors is the number of RIPv2 packets received by the RIP process which were subsequently discarded because of an error authenticating the packet. |
| v2BadRoutes | long | vRtrRipIfStatV2BadRoutes | vRtrRipIfStatV2BadRoutes is the number of routes, in valid RIPv2 packets, which were ignored for any reason (e.g. unknown address family, or invalid metric). |
| v2Requests | long | vRtrRipIfStatV2RcvRequests | vRtrRipIfStatV2RcvRequests is the number of RIPv2 request packets received by the RIP process. |
| v2RequestsIgnored | long | vRtrRipIfStatV2BadRequests | vRtrRipIfStatV2BadRequests is the number of RIPv2 request packets received by the RIP process that were subsequently discarded for any reason. |
| v2Updates | long | vRtrRipIfStatV2RcvUpdates | vRtrRipIfStatV2RcvUpdates is the number of RIPv2 response packets received by the RIP process. |
| v2UpdatesIgnored | long | vRtrRipIfStatV2BadUpdates | vRtrRipIfStatV2BadUpdates is the number of RIPv2 response packets received by the RIP process which were subsequently discarded for any reason. |
| **InterfaceTransmitStats**<br>MIB table name: TIMETRA-RIP-MIB.vRtrRipIfStatTable<br>Monitored class: rip.Interface | | | |
| totalUpdates | long | vRtrRipIfStatAllSentUpdates | vRtrRipIfStatAllSentUpdates is the number of all RIP updates actually sent on this interface. This explicitly does include full updates sent containing new information. |
| triggeredUpdates | long | vRtrRipIfStatAllTriggeredUpdates | vRtrRipIfStatAllTriggeredUpdates is the number of triggered RIP updates actually sent on this interface. This explicitly does include full updates sent containing new information. |

**(2 of 2)**

### Table A-42 rsvp statistics

| 5620 SAM counter name | Type | MIB counter name | Description |
|---|---|---|---|
| **AuthenticationKeyStats**<br>MIB table name: TIMETRA-RSVP-MIB.vRtrRsvpIfStatTable<br>Monitored class: rsvp.AuthenticationKey | | | |

**(1 of 6)**

| 5620 SAM counter name | Type | MIB counter name | Description |
|---|---|---|---|
| errorPacketsReceived | UINT128 | vRtrRsvpIfStatRxAuthErrors | The total number of RSVP packets with MD5 errors received on this RSVP interface. |
| errorPacketsTransmitted | UINT128 | vRtrRsvpIfStatTxAuthErrors | The total number of RSVP packets with MD5 errors sent by this RSVP interface. |
| **RsvpInterfaceReceiveStats**<br>MIB table name: TIMETRA-RSVP-MIB.vRtrRsvpIfStatTable<br>Monitored class: rsvp.Interface | | | |
| acks | UINT128 | vRtrRsvpIfStatRxAcks | The total number of RSVP ACK messages received when refresh reduction is enabled on this RSVP interface. |
| acks | UINT128 | vRtrRsvpIfStatTxAcks | The total number of RSVP ACK messages that have been transmitted on this RSVP interface when refresh reduction is enabled. |
| bundles | UINT128 | vRtrRsvpIfStatRxBundles | The total number of RSVP bundled packets received on this RSVP interface. Bundled packets are sent when refresh reduction is enabled. |
| bundles | UINT128 | vRtrRsvpIfStatTxBundles | The total number of RSVP bundled packets that have been transmitted on this RSVP interface. |
| errorPackets | UINT128 | vRtrRsvpIfStatRxErrorPkts | The total number of RSVP packets with errors received on this RSVP interface. |
| errorPackets | UINT128 | vRtrRsvpIfStatTxErrorPkts | The total number of RSVP packets with errors that have been transmitted on this RSVP interface. |
| hellos | UINT128 | vRtrRsvpIfStatRxHelloReqs | The total number of RSVP HELLO REQ messages received on this RSVP interface. |
| hellos | UINT128 | vRtrRsvpIfStatTxHelloReqs | The total number of RSVP HELLO REQ packets that have been transmitted on this RSVP interface. |
| helloTimeout | long | vRtrRsvpIfStatHelloTimeout | The total number of hello messages that timed out on this RSVP interface. |
| packets | UINT128 | vRtrRsvpIfStatRxPkts | The total number of error free RSVP packets received on this RSVP interface. |
| packets | UINT128 | vRtrRsvpIfStatTxPkts | The total number of error free RSVP packets that have been transmitted on this RSVP interface. |
| pathErrors | UINT128 | vRtrRsvpIfStatRxPathErrors | The total number of RSVP PATH ERROR messages that have been transmitted on this RSVP interface. |
| pathErrors | UINT128 | vRtrRsvpIfStatTxPathErrors | The total number of RSVP PATH ERROR messages that have been transmitted from this RSVP interface. |
| paths | UINT128 | vRtrRsvpIfStatRxPaths | The total number of RSVP PATH messages that have been received on this RSVP interface. |
| paths | UINT128 | vRtrRsvpIfStatTxPaths | The total number of RSVP PATH messages that have been transmitted from this RSVP interface. |

**(2 of 6)**

| 5620 SAM counter name | Type | MIB counter name | Description |
|---|---|---|---|
| pathTears | UINT128 | vRtrRsvpIfStatRxPathTears | The total number of RSVP PATH TEAR messages that have been received on this RSVP interface. |
| pathTears | UINT128 | vRtrRsvpIfStatTxPathTears | The total number of RSVP PATH TEAR messages that have been transmitted from this RSVP interface. |
| refreshes | UINT128 | vRtrRsvpIfStatRxSRefreshes | The total number of RSVP summary refresh, SREFRESH, messages received on this RSVP interface. |
| refreshes | UINT128 | vRtrRsvpIfStatTxSRefreshes | The total number of summary refresh, SREFRESH, messages that have been transmitted on this RSVP interface when refresh reduction is enabled. |
| reserveConfirms | UINT128 | vRtrRsvpIfStatRxResvConfirms | The total number of RSVP RESV CONFIRM messages that have been received on this RSVP interface. |
| reserveConfirms | UINT128 | vRtrRsvpIfStatTxResvConfirms | The total number of RSVP RESV CONFIRM messages that have been transmitted from this RSVP interface. |
| reserveErrors | UINT128 | vRtrRsvpIfStatRxResvErrors | The total number of RSVP RESV ERROR messages that have been received on this RSVP interface. |
| reserveErrors | UINT128 | vRtrRsvpIfStatTxResvErrors | The total number of RSVP RESV ERROR messages that have been transmitted from this RSVP interface. |
| reserves | UINT128 | vRtrRsvpIfStatRxResvs | The total number of RSVP RESV messages that have been received on this RSVP interface. |
| reserves | UINT128 | vRtrRsvpIfStatTxResvs | The total number of RSVP RESV messages that have been transmitted from this RSVP interface. |
| reserveTears | UINT128 | vRtrRsvpIfStatRxResvTears | The total number of RSVP RESV TEAR messages that have been received on this RSVP interface. |
| reserveTears | UINT128 | vRtrRsvpIfStatTxResvTears | The total number of RSVP RESV TEAR messages that have been transmitted from this RSVP interface. |
| totalPackets | UINT128 | vRtrRsvpIfStatRxTotalPkts | The total number of RSVP packets, including errors, received on this RSVP interface. |
| totalPackets | UINT128 | vRtrRsvpIfStatTxTotalPkts | The total number of RSVP packets, including error packets, that have been transmitted on this RSVP interface. |
| **RsvpInterfaceStats**<br>MIB table name: TIMETRA-RSVP-MIB.vRtrRsvpIfTable<br>Monitored class: rsvp.Interface | | | |
| activeReservations | long | vRtrRsvpIfActiveReservationCount | The total number of active RSVP sessions that have reserved bandwidth. |

**(3 of 6)**

| 5620 SAM counter name | Type | MIB counter name | Description |
|---|---|---|---|
| activeSessions | long | vRtrRsvpIfActiveSessionCount | The total number of active RSVP sessions on this interface. This count includes sessions that have requested bandwidth as well as sessions that have not requested any bandwidth. |
| bandwidth | long | vRtrRsvpIfBandwidth | The value of vRtrRsvpIfBandwidth specifies the amount of bandwidth in mega-bits per second (Mbps) available to be reserved for the RSVP protocol on this interface. This is typically the (port Speed * subscription Percentage). |
| reservedBandwidth | long | vRtrRsvpIfReservedBandwidth | The value of vRtrRsvpIfReservedBandwidth specifies the amount of bandwidth in mega-bits per second (Mbps) to reserved by the RSVP sessions on this interface. A value of zero (0) indicates that no bandwidth is reserved. |
| totalSessions | long | vRtrRsvpIfTotalSessionCount | The total number of RSVP sessions on this interface. This count includes sessions that are active as well as sessions that have been signalled but a response has not yet been received. |
| **RsvpInterfaceTransmitStats**<br>MIB table name: TIMETRA-RSVP-MIB.vRtrRsvpIfStatTable<br>Monitored class: rsvp.Interface | | | |
| acks | UINT128 | vRtrRsvpIfStatRxAcks | The total number of RSVP ACK messages received when refresh reduction is enabled on this RSVP interface. |
| acks | UINT128 | vRtrRsvpIfStatTxAcks | The total number of RSVP ACK messages that have been transmitted on this RSVP interface when refresh reduction is enabled. |
| bundles | UINT128 | vRtrRsvpIfStatRxBundles | The total number of RSVP bundled packets received on this RSVP interface. Bundled packets are sent when refresh reduction is enabled. |
| bundles | UINT128 | vRtrRsvpIfStatTxBundles | The total number of RSVP bundled packets that have been transmitted on this RSVP interface. |
| errorPackets | UINT128 | vRtrRsvpIfStatRxErrorPkts | The total number of RSVP packets with errors received on this RSVP interface. |
| errorPackets | UINT128 | vRtrRsvpIfStatTxErrorPkts | The total number of RSVP packets with errors that have been transmitted on this RSVP interface. |
| hellos | UINT128 | vRtrRsvpIfStatRxHelloReqs | The total number of RSVP HELLO REQ messages received on this RSVP interface. |
| hellos | UINT128 | vRtrRsvpIfStatTxHelloReqs | The total number of RSVP HELLO REQ packets that have been transmitted on this RSVP interface. |
| packets | UINT128 | vRtrRsvpIfStatRxPkts | The total number of error free RSVP packets received on this RSVP interface. |

**(4 of 6)**

| 5620 SAM counter name | Type | MIB counter name | Description |
|---|---|---|---|
| packets | UINT128 | vRtrRsvpIfStatTxPkts | The total number of error free RSVP packets that have been transmitted on this RSVP interface. |
| pathErrors | UINT128 | vRtrRsvpIfStatRxPathErrors | The total number of RSVP PATH ERROR messages that have been transmitted on this RSVP interface. |
| pathErrors | UINT128 | vRtrRsvpIfStatTxPathErrors | The total number of RSVP PATH ERROR messages that have been transmitted from this RSVP interface. |
| paths | UINT128 | vRtrRsvpIfStatRxPaths | The total number of RSVP PATH messages that have been received on this RSVP interface. |
| paths | UINT128 | vRtrRsvpIfStatTxPaths | The total number of RSVP PATH messages that have been transmitted from this RSVP interface. |
| pathTears | UINT128 | vRtrRsvpIfStatRxPathTears | The total number of RSVP PATH TEAR messages that have been received on this RSVP interface. |
| pathTears | UINT128 | vRtrRsvpIfStatTxPathTears | The total number of RSVP PATH TEAR messages that have been transmitted from this RSVP interface. |
| refreshes | UINT128 | vRtrRsvpIfStatRxSRefreshes | The total number of RSVP summary refresh, SREFRESH, messages received on this RSVP interface. |
| refreshes | UINT128 | vRtrRsvpIfStatTxSRefreshes | The total number of summary refresh, SREFRESH, messages that have been transmitted on this RSVP interface when refresh reduction is enabled. |
| reserveConfirms | UINT128 | vRtrRsvpIfStatRxResvConfirms | The total number of RSVP RESV CONFIRM messages that have been received on this RSVP interface. |
| reserveConfirms | UINT128 | vRtrRsvpIfStatTxResvConfirms | The total number of RSVP RESV CONFIRM messages that have been transmitted from this RSVP interface. |
| reserveErrors | UINT128 | vRtrRsvpIfStatRxResvErrors | The total number of RSVP RESV ERROR messages that have been received on this RSVP interface. |
| reserveErrors | UINT128 | vRtrRsvpIfStatTxResvErrors | The total number of RSVP RESV ERROR messages that have been transmitted from this RSVP interface. |
| reserves | UINT128 | vRtrRsvpIfStatRxResvs | The total number of RSVP RESV messages that have been received on this RSVP interface. |
| reserves | UINT128 | vRtrRsvpIfStatTxResvs | The total number of RSVP RESV messages that have been transmitted from this RSVP interface. |
| reserveTears | UINT128 | vRtrRsvpIfStatRxResvTears | The total number of RSVP RESV TEAR messages that have been received on this RSVP interface. |
| reserveTears | UINT128 | vRtrRsvpIfStatTxResvTears | The total number of RSVP RESV TEAR messages that have been transmitted from this RSVP interface. |

**(5 of 6)**

| 5620 SAM counter name | Type | MIB counter name | Description |
|---|---|---|---|
| totalPackets | UINT128 | vRtrRsvpIfStatRxTotalPkts | The total number of RSVP packets, including errors, received on this RSVP interface. |
| totalPackets | UINT128 | vRtrRsvpIfStatTxTotalPkts | The total number of RSVP packets, including error packets, that have been transmitted on this RSVP interface. |
| **RsvpSessionStats**<br>MIB table name: TIMETRA-RSVP-MIB.vRtrRsvpSessionStatTable<br>Monitored class: rsvp.Session | | | |
| detourAge | long | vRtrRsvpSessionDetourAge | vRtrRsvpSessionDetourAge is the age (i.e., time from creation till now) of this detour LSP in 10-millisecond periods. |
| detourTimeUp | long | vRtrRsvpSessionDetourTimeUp | vRtrRsvpSessionDetourTimeUp is the total time in 10-millisecond units that the detour LSP has been operational. |
| pathsReceived | UINT128 | vRtrRsvpSessionRxPaths | The total number of RSVP PATH messages received for this RSVP session. |
| pathsTransmitted | UINT128 | vRtrRsvpSessionTxPaths | The total number of RSVP PATH messages transmitted for this RSVP session. |
| refreshPathsReceived | UINT128 | vRtrRsvpSessionRxSrefreshPaths | The value of vRtrRsvpSessionRxSrefreshPaths indicates the number of times PATH was refreshed using message ID from full PATH refresh or Srefresh message for this RSVP session. |
| refreshPathsTransmitted | UINT128 | vRtrRsvpSessionTxSrefreshPaths | The value of vRtrRsvpSessionTxSrefreshPaths indicates the number of times PATH refresh for the session was sent as a part of a Srefresh message. |
| refreshReservesReceived | UINT128 | vRtrRsvpSessionRxSrefreshResvs | The value of vRtrRsvpSessionRxSrefreshResvs indicates the number of times RESV was refreshed using message ID from full RESV refresh or Srefresh message for this RSVP session. |
| refreshReservesTransmitted | UINT128 | vRtrRsvpSessionTxSrefreshResvs | The value of vRtrRsvpSessionTxSrefreshResvs indicates the number of times RESV refresh for the session was sent as a part of a Srefresh message. |
| reservesReceived | UINT128 | vRtrRsvpSessionRxResvs | The total number of RSVP RESV messages received for this RSVP session. |
| reservesTransmitted | UINT128 | vRtrRsvpSessionTxResvs | The total number of RSVP RESV messages transmitted for this RSVP session. |

**(6 of 6)**

**Table A-43 rtr statistics**

| 5620 SAM counter name | Type | MIB counter name | Description |
|---|---|---|---|
| **CpeCheckStats**<br>MIB table name: TIMETRA-VRTR-MIB.vRtrInetStatRteCpeChkStatsTable<br>Monitored class: rtr.StaticRoute | | | |
| downTransitions | long | vRtrInetStatRteCpeChkDownTrans | The value of vRtrInetStatRteCpeChkDownTrans indicates the number of times the CPE has transitioned to the unavailable state. |
| echoReplyPacketsReceived | long | vRtrInetStatRteCpeChkInPktCnt | The value of vRtrInetStatRteCpeChkInPktCnt indicates the number of echo-reply packets received. |
| echoRequestPacketsSent | long | vRtrInetStatRteCpeChkOutPktCnt | The value of vRtrInetStatRteCpeChkOutPktCnt indicates the number of echo-request packets sent. |
| hostUpDownTime | long | vRtrInetStatRteCpeChkUpTime | The value of vRtrInetStatRteCpeChkUpTime indicates how long (in hundredths of a second) that the CPE has been available. |
| ttl | long | vRtrInetStatRteCpeChkTTL | The value of vRtrInetStatRteCpeChkTTL indicates the time, in seconds, before the CPE will be declared down. Upon receipt of an echo reply, it has the value of vRtrInetStaticRouteCpeInterval * vRtrInetStaticRouteCpeDropCnt and is decremented by 1 every second. |
| upTransitions | long | vRtrInetStatRteCpeChkUpTrans | The value of vRtrInetStatRteCpeChkUpTrans indicates the number of times the CPE has transitioned to the available state. |
| **DhcpRelayStats**<br>MIB table name: TIMETRA-VRTR-MIB.vRtrIfDHCPRelayStatsTable<br>Monitored classes:<br>• rtr.DhcpRelayConfiguration<br>• rtr.SubItfDhcpRelayCfg<br>• rtr.GrpItfDhcpRelayCfg | | | |
| authPktsDiscarded | long | vRtrIfDHCPRelayAuthPktsDiscarded | vRtrIfDHCPRelayAuthPktsDiscarded indicates the total number of packets discarded because authentication was not successful. |
| authPktsSuccess | long | vRtrIfDHCPRelayAuthPktsSuccess | vRtrIfDHCPRelayAuthPktsSuccess indicates the total number of packets for which authentication was successful. |
| clientPacketsDiscarded | long | vRtrIfDHCPRelayClientPktsDiscarded | vRtrIfDHCPRelayClientPktsDiscarded indicates the total number of client packets dicarded by the DHCP relay agent. |
| clientPacketsRelayed | long | vRtrIfDHCPRelayClientPktsRelayed | vRtrIfDHCPRelayClientPktsRelayed indicates the total number of client packets relayed by the DHCP relay agent. |

**(1 of 12)**

| 5620 SAM counter name | Type | MIB counter name | Description |
|---|---|---|---|
| clientPktsProxLS | long | vRtrIfDHCPRelayClientPktsProxLS | vRtrIfDHCPRelayClientPktsProxLS indicates the total number of client packets proxied by the DHCP relay agent based on a lease state. The lease itself can have been obtained from a DHCP or RADIUS server. This is the so called lease split functionality. |
| clientPktsProxRad | long | vRtrIfDHCPRelayClientPktsProxRad | vRtrIfDHCPRelayClientPktsProxRad indicates the total number of client packets proxied by the DHCP relay agent based on data received from a RADIUS server. |
| clientPktsProxRad | long | vRtrIfDHCPRelayClientPktsSnooped | vRtrIfDHCPRelayClientPktsSnooped indicates the total number of client packets snooped by the DHCP relay agent. |
| pktsGenRelease | long | vRtrIfDHCPRelayPktsGenRelease | vRtrIfDHCPRelayPktsGenRelease indicates the total number of DHCP RELEASE messages spoofed by the DHCP relay agent to the DHCP server. |
| receivedMalformedPackets | long | vRtrIfDHCPRelayRxMalformedPkts | vRtrIfDHCPRelayRxMalformedPkts indicates the total number of malformed packets received by the DHCP relay agent. |
| receivedPackets | long | vRtrIfDHCPRelayRxPkts | vRtrIfDHCPRelayRxPkts indicates the total number of packets received by the DHCP relay agent. |
| receivedUntrustedPackets | long | vRtrIfDHCPRelayRxUntrustedPkts | vRtrIfDHCPRelayRxUntrustedPkts indicates the total number of untrusted packets received by the DHCP relay agent. |
| serverPacketsDiscarded | long | vRtrIfDHCPRelayServerPktsDiscarded | vRtrIfDHCPRelayServerPktsDiscarded indicates the total number of server packets discarded by the DHCP relay agent. |
| serverPacketsRelayed | long | vRtrIfDHCPRelayServerPktsRelayed | vRtrIfDHCPRelayServerPktsRelayed indicates the total number of server packets relayed by the DHCP relay agent. |
| serverPktsSnooped | long | vRtrIfDHCPRelayPktsGenForceRenew | vRtrIfDHCPRelayPktsGenForceRenew indicates the total number of DHCP FORCERENEW messages spoofed by the DHCP relay agent to the DHCP clients. |
| serverPktsSnooped | long | vRtrIfDHCPRelayServerPktsSnooped | vRtrIfDHCPRelayServerPktsSnooped indicates the total number of server packets snooped by the DHCP relay agent. |
| transmittedPackets | long | vRtrIfDHCPRelayTxPkts | vRtrIfDHCPRelayTxPkts indicates the total number of packets transmitted by the DHCP relay agent. |
| **DhcpRelayV6Stats**<br>MIB table name: TIMETRA-SERV-MIB.svcIfDHCP6MsgStatTable<br>Monitored classes:<br>• rtr.DhcpRelayV6Configuration<br>• rtr.DhcpRelayV6ProxyServer | | | |

**(2 of 12)**

| 5620 SAM counter name | Type | MIB counter name | Description |
|---|---|---|---|
| droppedPackets | long | svcIfDHCP6MsgStatsDropped | The value of svcIfDHCP6MsgStatsDropped indicates the number of DHCP6 packets were dropped on this service interface. |
| receivedPackets | long | svcIfDHCP6MsgStatsRcvd | The value of svcIfDHCP6MsgStatsRcvd indicates the number of DHCP6 packets were received on this service interface. |
| transmittedPackets | long | svcIfDHCP6MsgStatsSent | The value of svcIfDHCP6MsgStatsSent indicates the number of DHCP6 packets were sent on this service interface. |
| **NetworkInterfaceReasStats**<br>MIB table name: TIMETRA-VRTR-MIB.vRtrIfStatsTable<br>Monitored classes:<br>• rtr.NetworkInterface<br>• vprn.L3AccessInterface | | | |
| ipReasBytesRx | UINT128 | vRtrIfIpReasBytesRx | The value of vRtrIfIpReasBytesRx indicates the number of total bytes received on this interface. The value of the object is '0' if the MDA type is not 'isa-ip-reas'. |
| ipReasBytesRxHigh32 | long | vRtrIfIpReasBytesRxHigh32 | The value of vRtrIfIpReasBytesRxHigh32 indicates the high 32 bits of the value of vRtrIfIpReasBytesRx. |
| ipReasBytesRxLow32 | long | vRtrIfIpReasBytesRxLow32 | The value of vRtrIfIpReasBytesRxLow32 indicates the lower 32 bits of the value of vRtrIfIpReasBytesRx. |
| ipReasBytesTx | UINT128 | vRtrIfIpReasBytesTx | The value of vRtrIfIpReasBytesTx indicates the number of total bytes sent from this interface. The value of the object is '0' if the MDA type is not 'isa-ip-reas'. |
| ipReasBytesTxHigh32 | long | vRtrIfIpReasBytesTxHigh32 | The value of vRtrIfIpReasBytesTxHigh32 indicates the high 32 bits of the value of vRtrIfIpReasBytesTx. |
| ipReasBytesTxLow32 | long | vRtrIfIpReasBytesTxLow32 | The value of vRtrIfIpReasBytesTxLow32 indicates the lower 32 bits of the value of vRtrIfIpReasBytesTx. |
| ipReasFragBytesRcvd | UINT128 | vRtrIfIpReasFragBytesRcvd | The value of vRtrIfIpReasFragBytesRcvd indicates the number of fragmented bytes received on this interface. The value of the object is '0' if the MDA type is not 'isa-ip-reas'. |
| ipReasFragBytesRcvdHigh32 | long | vRtrIfIpReasFragBytesRcvdHigh32 | The value of vRtrIfIpReasFragBytesRcvdHigh32 indicates the high 32 bits of the value of vRtrIfIpReasFragBytesRcvd. |
| ipReasFragBytesRcvdLow32 | long | vRtrIfIpReasFragBytesRcvdLow32 | The value of vRtrIfIpReasFragBytesRcvdLow32 indicates the lower 32 bits of the value of vRtrIfIpReasFragBytesRcvd. |
| ipReasFragBytesReas | UINT128 | vRtrIfIpReasFragBytesReas | The value of vRtrIfIpReasFragBytesReas indicates the number of fragmented bytes reassembled on this interface. The value of the object is '0' if the MDA type is not 'isa-ip-reas'. |

**(3 of 12)**

| 5620 SAM counter name | Type | MIB counter name | Description |
|---|---|---|---|
| ipReasFragBytesReasHigh32 | long | vRtrIfIpReasFragBytesReasHigh32 | The value of vRtrIfIpReasFragBytesReasHigh32 indicates the high 32 bits of the value of vRtrIfIpReasFragBytesReas. |
| ipReasFragBytesReasLow32 | long | vRtrIfIpReasFragBytesReasLow32 | The value of vRtrIfIpReasFragBytesReasLow32 indicates the lower 32 bits of the value of vRtrIfIpReasFragBytesReas. |
| ipReasFragDisc | UINT128 | vRtrIfIpReasFragDisc | The value of vRtrIfIpReasFragDisc indicates the number of packets reassembly discarded due to the timeout on this interface. The value of the object is '0' if the MDA type is not 'isa-ip-reas'. |
| ipReasFragDiscHigh32 | long | vRtrIfIpReasFragDiscHigh32 | The value of vRtrIfIpReasFragDiscHigh32 indicates the high 32 bits of the value of vRtrIfIpReasFragDisc. |
| ipReasFragDiscLow32 | long | vRtrIfIpReasFragDiscLow32 | The value of vRtrIfIpReasFragDiscLow32 indicates the lower 32 bits of the value of vRtrIfIpReasFragDisc. |
| ipReasFragPktsRcvd | UINT128 | vRtrIfIpReasFragPktsRcvd | The value of vRtrIfIpReasFragPktsRcvd indicates the number of fragmented packets received on this interface. The value of the object is '0' if the MDA type is not 'isa-ip-reas'. |
| ipReasFragPktsRcvdHigh32 | long | vRtrIfIpReasFragPktsRcvdHigh32 | The value of vRtrIfIpReasFragPktsRcvdHigh32 indicates the high 32 bits of the value of vRtrIfIpReasFragPktsRcvd. |
| ipReasFragPktsRcvdLow32 | long | vRtrIfIpReasFragPktsRcvdLow32 | The value of vRtrIfIpReasFragPktsRcvdLow32 indicates the lower 32 bits of the value of vRtrIfIpReasFragPktsRcvd. |
| ipReasFragPktsReas | UINT128 | vRtrIfIpReasFragPktsReas | The value of vRtrIfIpReasFragPktsReas indicates the number of fragmented packets reassembled on this interface. The value of the object is '0' if the MDA type is not 'isa-ip-reas'. |
| ipReasFragPktsReasHigh32 | long | vRtrIfIpReasFragPktsReasHigh32 | The value of vRtrIfIpReasFragPktsReasHigh32 indicates the high 32 bits of the value of vRtrIfIpReasFragPktsRcvd. |
| ipReasFragPktsReasLow32 | long | vRtrIfIpReasFragPktsReasLow32 | The value of vRtrIfIpReasFragPktsReasLow32 indicates the lower 32 bits of the value of vRtrIfIpReasFragPktsReas. |
| ipReasFragReasErrors | UINT128 | vRtrIfIpReasFragReasErrors | The value of vRtrIfIpReasFragReasErrors indicates the number of reassembly errors occured on this interface. The value of the object is '0' if the MDA type is not 'isa-ip-reas'. |
| ipReasFragReasErrorsHigh32 | long | vRtrIfIpReasFragReasErrorsHigh32 | The value of vRtrIfIpReasFragReasErrorsHigh32 indicates the high 32 bits of the value of vRtrIfIpReasFragReasErrors. |

**(4 of 12)**

| 5620 SAM counter name | Type | MIB counter name | Description |
|---|---|---|---|
| ipReasFragReasErrorsLow32 | long | vRtrIfIpReasFragReasErrorsLow32 | The value of vRtrIfIpReasFragReasErrorsLow32 indicates the lower 32 bits of the value of vRtrIfIpReasFragReasErrors. |
| ipReasOutBufRes | UINT128 | vRtrIfIpReasOutBufRes | The value of vRtrIfIpReasOutBufRes indicates the number of times out of buffer resources happend while reassembly on this interface. The value of the object is '0' if the MDA type is not 'isa-ip-reas'. |
| ipReasOutBufResHigh32 | long | vRtrIfIpReasOutBufResHigh32 | The value of vRtrIfIpReasOutBufResHigh32 indicates the high 32 bits of the value of vRtrIfIpReasOutBufRes. |
| ipReasOutBufResLow32 | long | vRtrIfIpReasOutBufResLow32 | The value of vRtrIfIpReasOutBufResLow32 indicates the lower 32 bits of the value of vRtrIfIpReasOutBufRes. |
| ipReasPktsRx | UINT128 | vRtrIfIpReasPktsRx | The value of vRtrIfIpReasPktsRx indicates the number of total packets received on this interface. The value of the object is '0' if the MDA type is not 'isa-ip-reas'. |
| ipReasPktsRxHigh32 | long | vRtrIfIpReasPktsRxHigh32 | The value of vRtrIfIpReasPktsRxHigh32 indicates the high 32 bits of the value of vRtrIfIpReasPktsRx. |
| ipReasPktsRxLow32 | long | vRtrIfIpReasPktsRxLow32 | The value of vRtrIfIpReasPktsRxLow32 indicates the lower 32 bits of the value of vRtrIfIpReasPktsRx. |
| ipReasPktsTx | UINT128 | vRtrIfIpReasPktsTx | The value of vRtrIfIpReasPktsTx indicates the number of total packets sent from this interface. The value of the object is '0' if the MDA type is not 'isa-ip-reas'. |
| ipReasPktsTxHigh32 | long | vRtrIfIpReasPktsTxHigh32 | The value of vRtrIfIpReasPktsTxHigh32 indicates the high 32 bits of the value of vRtrIfIpReasPktsTx. |
| ipReasPktsTxLow32 | long | vRtrIfIpReasPktsTxLow32 | The value of vRtrIfIpReasPktsTxLow32 indicates the lower 32 bits of the value of vRtrIfIpReasPktsTx. |
| ipReasV6BytesRx | UINT128 | vRtrIfIpReasV6BytesRx | The value of vRtrIfIpReasV6BytesRx indicates the number of total IPv6 bytes received on this interface. The value of the object is '0' if the MDA type is not 'isa-ip-reas'. |
| ipReasV6BytesRxHigh32 | long | vRtrIfIpReasV6BytesRxHigh32 | The value of vRtrIfIpReasV6BytesRxHigh32 indicates the high 32 bits of the value of vRtrIfIpReasV6BytesRx. |
| ipReasV6BytesRxLow32 | long | vRtrIfIpReasV6BytesRxLow32 | The value of vRtrIfIpReasV6BytesRxLow32 indicates the lower 32 bits of the value of vRtrIfIpReasV6BytesRx. |
| ipReasV6BytesTx | UINT128 | vRtrIfIpReasV6BytesTx | The value of vRtrIfIpReasV6BytesTx indicates the number of total IPv6 bytes sent from this interface. The value of the object is '0' if the MDA type is not 'isa-ip-reas'. |

**(5 of 12)**

| 5620 SAM counter name | Type | MIB counter name | Description |
|---|---|---|---|
| ipReasV6BytesTxHigh32 | long | vRtrIfIpReasV6BytesTxHigh32 | The value of vRtrIfIpReasV6BytesTxHigh32 indicates the high 32 bits of the value of vRtrIfIpReasV6BytesTx. |
| ipReasV6BytesTxLow32 | long | vRtrIfIpReasV6BytesTxLow32 | The value of vRtrIfIpReasV6BytesTxLow32 indicates the lower 32 bits of the value of vRtrIfIpReasV6BytesTx. |
| ipReasV6FragBytesRcvd | UINT128 | vRtrIfIpReasV6FragBytesRcvd | The value of vRtrIfIpReasV6FragBytesRcvd indicates the number of IPv6 fragmented bytes received on this interface. The value of the object is '0' if the MDA type is not 'isa-ip-reas'. |
| ipReasV6FragBytesRcvdH32 | long | vRtrIfIpReasV6FragBytesRcvdH32 | The value of vRtrIfIpReasV6FragBytesRcvdH32 indicates the high 32 bits of the value of vRtrIfIpReasV6FragBytesRcvd. |
| ipReasV6FragBytesRcvdL32 | long | vRtrIfIpReasV6FragBytesRcvdL32 | The value of vRtrIfIpReasV6FragBytesRcvdL32 indicates the lower 32 bits of the value of vRtrIfIpReasV6FragBytesRcvd. |
| ipReasV6FragBytesReas | UINT128 | vRtrIfIpReasV6FragBytesReas | The value of vRtrIfIpReasV6FragBytesReas indicates the number of IPv6 fragmented bytes reassembled on this interface. The value of the object is '0' if the MDA type is not 'isa-ip-reas'. |
| ipReasV6FragBytesReasH32 | long | vRtrIfIpReasV6FragBytesReasH32 | The value of vRtrIfIpReasV6FragBytesReasH32 indicates the high 32 bits of the value of vRtrIfIpReasV6FragBytesReas. |
| ipReasV6FragBytesReasL32 | long | vRtrIfIpReasV6FragBytesReasL32 | The value of vRtrIfIpReasV6FragBytesReasL32 indicates the lower 32 bits of the value of vRtrIfIpReasV6FragBytesReas. |
| ipReasV6FragDisc | UINT128 | vRtrIfIpReasV6FragDisc | The value of vRtrIfIpReasV6FragDisc indicates the number of IPv6 packets reassembly discarded due to the timeout on this interface. The value of the object is '0' if the MDA type is not 'isa-ip-reas'. |
| ipReasV6FragDiscHigh32 | long | vRtrIfIpReasV6FragDiscHigh32 | The value of vRtrIfIpReasV6FragDiscHigh32 indicates the high 32 bits of the value of vRtrIfIpReasV6FragDisc. |
| ipReasV6FragDiscLow32 | long | vRtrIfIpReasV6FragDiscLow32 | The value of vRtrIfIpReasV6FragDiscLow32 indicates the lower 32 bits of the value of vRtrIfIpReasV6FragDisc. |
| ipReasV6FragPktsRcvd | UINT128 | vRtrIfIpReasV6FragPktsRcvd | The value of vRtrIfIpReasV6FragPktsRcvd indicates the number of IPv6 fragmented packets received on this interface. The value of the object is '0' if the MDA type is not 'isa-ip-reas'. |
| ipReasV6FragPktsRcvdHigh32 | long | vRtrIfIpReasV6FragPktsRcvdHigh32 | The value of vRtrIfIpReasV6FragPktsRcvdHigh32 indicates the high 32 bits of the value of vRtrIfIpReasV6FragPktsRcvd. |

**(6 of 12)**

| 5620 SAM counter name | Type | MIB counter name | Description |
|---|---|---|---|
| ipReasV6FragPktsRcvdLow32 | long | vRtrIfIpReasV6FragPktsRcvdLow32 | The value of vRtrIfIpReasV6FragPktsRcvdLow32 indicates the lower 32 bits of the value of vRtrIfIpReasV6FragPktsRcvd. |
| ipReasV6FragPktsReas | UINT128 | vRtrIfIpReasV6FragPktsReas | The value of vRtrIfIpReasV6FragPktsReas indicates the number of IPv6 fragmented packets reassembled on this interface. The value of the object is '0' if the MDA type is not 'isa-ip-reas'. |
| ipReasV6FragPktsReasHigh32 | long | vRtrIfIpReasV6FragPktsReasHigh32 | The value of vRtrIfIpReasV6FragPktsReasHigh32 indicates the high 32 bits of the value of vRtrIfIpReasV6FragPktsRcvd. |
| ipReasV6FragPktsReasLow32 | long | vRtrIfIpReasV6FragPktsReasLow32 | The value of vRtrIfIpReasV6FragPktsReasLow32 indicates the lower 32 bits of the value of vRtrIfIpReasV6FragPktsReas. |
| ipReasV6FragReasErrors | UINT128 | vRtrIfIpReasV6FragReasErrors | The value of vRtrIfIpReasV6FragReasErrors indicates the number of IPv6 reassembly errors occured on this interface. The value of the object is '0' if the MDA type is not 'isa-ip-reas'. |
| ipReasV6FragReasErrorsH32 | long | vRtrIfIpReasV6FragReasErrorsH32 | The value of vRtrIfIpReasV6FragReasErrorsH32 indicates the high 32 bits of the value of vRtrIfIpReasV6FragReasErrors. |
| ipReasV6FragReasErrorsL32 | long | vRtrIfIpReasV6FragReasErrorsL32 | The value of vRtrIfIpReasV6FragReasErrorsL32 indicates the lower 32 bits of the value of vRtrIfIpReasV6FragReasErrors. |
| ipReasV6OutBufRes | UINT128 | vRtrIfIpReasV6OutBufRes | The value of vRtrIfIpReasV6OutBufRes indicates the number of times out of buffer resources happend while IPv6 reassembly on this interface. The value of the object is '0' if the MDA type is not 'isa-ip-reas'. |
| ipReasV6OutBufResHigh32 | long | vRtrIfIpReasV6OutBufResHigh32 | The value of vRtrIfIpReasV6OutBufResHigh32 indicates the high 32 bits of the value of vRtrIfIpReasV6OutBufRes. |
| ipReasV6OutBufResLow32 | long | vRtrIfIpReasV6OutBufResLow32 | The value of vRtrIfIpReasV6OutBufResLow32 indicates the lower 32 bits of the value of vRtrIfIpReasV6OutBufRes. |
| ipReasV6PktsRx | UINT128 | vRtrIfIpReasV6PktsRx | The value of vRtrIfIpReasV6PktsRx indicates the number of total IPv6 packets received on this interface. The value of the object is '0' if the MDA type is not 'isa-ip-reas'. |
| ipReasV6PktsRxHigh32 | long | vRtrIfIpReasV6PktsRxHigh32 | The value of vRtrIfIpReasV6PktsRxHigh32 indicates the high 32 bits of the value of vRtrIfIpReasV6PktsRx. |
| ipReasV6PktsRxLow32 | long | vRtrIfIpReasV6PktsRxLow32 | The value of vRtrIfIpReasV6PktsRxLow32 indicates the lower 32 bits of the value of vRtrIfIpReasV6PktsRx. |

**(7 of 12)**

| 5620 SAM counter name | Type | MIB counter name | Description |
|---|---|---|---|
| ipReasV6PktsTx | UINT128 | vRtrIfIpReasV6PktsTx | The value of vRtrIfIpReasV6PktsTx indicates the number of total IPv6 packets sent from this interface. The value of the object is '0' if the MDA type is not 'isa-ip-reas'. |
| ipReasV6PktsTxHigh32 | long | vRtrIfIpReasV6PktsTxHigh32 | The value of vRtrIfIpReasV6PktsTxHigh32 indicates the high 32 bits of the value of vRtrIfIpReasV6PktsTx. |
| ipReasV6PktsTxLow32 | long | vRtrIfIpReasV6PktsTxLow32 | The value of vRtrIfIpReasV6PktsTxLow32 indicates the lower 32 bits of the value of vRtrIfIpReasV6PktsTx. |
| **NetworkInterfaceURPFStats**<br>MIB table name: TIMETRA-VRTR-MIB.vRtrIfStatsTable<br>Monitored classes:<br>• rtr.NetworkInterface<br>• vprn.NetworkInterface | | | |
| uRPFCheckFailPkts | UINT128 | vRtrIfuRPFCheckFailPkts | The value of vRtrIfuRPFCheckFailPkts indicates the number of packets that fail uRPF check on this interface. |
| uRPFCheckFailPktsHigh32 | long | vRtrIfuRPFCheckFailPktsHigh32 | The value of vRtrIfuRPFCheckFailPktsHigh32 indicates the high 32 bits of the value of vRtrIfuRPFCheckFailPkts. |
| uRPFCheckFailPktsLow32 | long | vRtrIfuRPFCheckFailPktsLow32 | The value of vRtrIfuRPFCheckFailPktsLow32 indicates the lower 32 bits of the value of vRtrIfuRPFCheckFailPkts. |
| **RouteStats**<br>MIB table name: TIMETRA-VRTR-MIB.vRtrStatTable<br>Monitored classes:<br>• rtr.VirtualRouter<br>• vprn.Site | | | |
| activeARPEntries | long | vRtrStatActiveARPEntries | vRtrStatActiveARPEntries indicates the number of active ARP entries for the specified virtual router in the system. |
| activeBgpTunnels | long | vRtrStatActiveBgpTunnels | — |
| aggregateActiveRoutes | long | vRtrAggregateActiveRoutes | vRtrAggregateActiveRoutes indicates the current number of active aggregate routes for this instance of the route table. |
| aggregateRoutes | long | vRtrAggregateRoutes | vRtrAggregateRoutes indicates the current number of aggregate routes for this instance of the route table. |
| bgpActiveRoutes | long | vRtrBGPActiveRoutes | vRtrBGPActiveRoutes indicates the current number of active bgp routes for this instance of the route table. |
| bgpRoutes | long | vRtrBGPRoutes | vRtrBGPRoutes indicates the current number of bgp routes for this instance of the route table. |
| bgpVpnActiveRoutes | long | vRtrStatBGPVpnActiveRoutes | vRtrStatBGPVpnActiveRoutes indicates the current number of active VPN-IPV4 routes learned by MP-BGP for this virtual router. |

**(8 of 12)**

| 5620 SAM counter name | Type | MIB counter name | Description |
|---|---|---|---|
| bgpVpnRoutes | long | vRtrStatBGPVpnRoutes | vRtrStatBGPVpnRoutes indicates the current number of VPN-IPV4 routes learned by MP-BGP for this virtual router. |
| directActiveRoutes | long | vRtrDirectActiveRoutes | vRtrDirectActiveRoutes indicates the current number of active direct routes for this instance of the route table. |
| directRoutes | long | vRtrDirectRoutes | vRtrDirectRoutes indicates the current number of direct routes for this instance of the route table. |
| illegalLabelsReceived | long | vRtrStatIllegalLabels | vRtrStatIllegalLabels indicates the number of illegally received labels on this virtual router. |
| isisActiveRoutes | long | vRtrISISActiveRoutes | vRtrISISActiveRoutes indicates the current number of active isis routes for this instance of the route table. |
| isisRoutes | long | vRtrISISRoutes | vRtrISISRoutes indicates the current number of isis routes for this instance of the route table. |
| ldpActiveTunnels | long | vRtrStatActiveLdpTunnels | vRtrStatActiveLdpTunnels indicates the current number of rows in the vRtrTunnelTable where vRtrTunnelType has a value of 'ldp'. |
| ldpTunnels | long | vRtrStatTotalLdpTunnels | vRtrStatTotalLdpTunnels indicates the current number of both active and inactive LDP tunnels. |
| multicastRoutes | long | vRtrMulticastRoutes | vRtrMulticastRoutes indicates the current number of rows in the vRtrPimNgGrpSrcTable. |
| ospfActiveRoutes | long | vRtrOSPFActiveRoutes | vRtrOSPFActiveRoutes indicates the current number of active ospf routes for this instance of the route table. |
| ospfRoutes | long | vRtrOSPFRoutes | vRtrOSPFRoutes indicates the current number of ospf routes for this instance of the route table. |
| ripActiveRoutes | long | vRtrRIPActiveRoutes | vRtrRIPActiveRoutes indicates the current number of active rip routes for this instance of the route table. |
| ripRoutes | long | vRtrRIPRoutes | vRtrRIPRoutes indicates the current number of rip routes for this instance of the route table. |
| routerInterfacesActive | long | vRtrStatActiveIfs | vRtrStatActiveIfs indicates the current number of router interfaces with vRtrIfAdminState equal 'inService' on this virtual router. |
| routerInterfacesConfigured | long | vRtrStatConfiguredIfs | vRtrStatConfiguredIfs indicates the current number of router interfaces configured on this virtual router. |
| routesInVrf | long | vRtrStatCurrNumRoutes | vRtrStatCurrNumRoutes indicates the current number of routes in the VRF for this virtual router. |

**(9 of 12)**

| 5620 SAM counter name | Type | MIB counter name | Description |
|---|---|---|---|
| sdpActiveTunnels | long | vRtrStatActiveSdpTunnels | vRtrStatActiveSdpTunnels indicates the current number of rows in the vRtrTunnelTable where vRtrTunnelType has a value of 'sdp'. |
| sdpTunnels | long | vRtrStatTotalSdpTunnels | vRtrStatTotalSdpTunnels indicates the current number of both active and inactive SDP tunnels. |
| staticActiveRoutes | long | vRtrStaticActiveRoutes | vRtrStaticActiveRoutes indicates the current number of active static routes for this instance of the route table. |
| staticRoutes | long | vRtrStaticRoutes | vRtrStaticRoutes indicates the current number of static routes for this instance of the route table. |
| totalARPEntries | long | vRtrStatTotalARPEntries | vRtrStatTotalARPEntries indicates the total number of active and inactive ARP entries for the specified virtual router in the system. |
| totalBgpTunnels | long | vRtrStatTotalBgpTunnels | — |
| **VirtualInterfaceIcmp6InStats**<br>MIB table name: TIMETRA-VRTR-MIB.vRtrIfIcmp6Table<br>Monitored class: rtr.VirtualInterfaceIcmp6Configuration | | | |
| inDestinationUnreachable | long | vRtrIfIcmp6InDestUnreachs | The value of vRtrIfIcmp6InDestUnreachs indicates the number of ICMP Destination Unreachable messages received by this interface. |
| inEchoReplies | long | vRtrIfIcmp6InEchoReplies | The value of vRtrIfIcmp6InEchoReplies indicates the number of ICMP Echo Reply messages received by this interface. |
| inEchoRequests | long | vRtrIfIcmp6InEchos | The value of vRtrIfIcmp6InEchos indicates the number of ICMP Echo (request) messages received by this interface. |
| inErrors | long | vRtrIfIcmp6InErrors | The value of vRtrIfIcmp6InErrors indicates the number of ICMP messages which this interface received but determined as having ICMP-specific errors (bad ICMP checksums, bad length , etc.). |
| inNeighborAdvertisements | long | vRtrIfIcmp6InNbrAdvertisements | The value of vRtrIfIcmp6InNbrAdvertisements indicates the number of ICMP Neighbor Advertisement messages received by this interface. |
| inNeighborSolicits | long | vRtrIfIcmp6InNbrSolicits | The value of vRtrIfIcmp6InNbrSolicits indicates the number of ICMP Neighbor Solicit messages received by this interface. |
| inPacketTooBig | long | vRtrIfIcmp6InPktTooBigs | The value of vRtrIfIcmp6InPktTooBigs indicates the number of ICMP Packet Too Big messages received by this interface. |
| inRedirects | long | vRtrIfIcmp6InRedirects | The value of vRtrIfIcmp6InRedirects indicates number of ICMP Redirect messages received by this interface. |

**(10 of 12)**

| 5620 SAM counter name | Type | MIB counter name | Description |
|---|---|---|---|
| inRouterAdvertisements | long | vRtrIfIcmp6InRtrAdvertisements | The value of vRtrIfIcmp6InRtrAdvertisements indicates the number of ICMP Router Advertisement messages received by this interface. |
| inRouterSolicits | long | vRtrIfIcmp6InRtrSolicits | The value of vRtrIfIcmp6InRtrSolicits indicates the number of ICMP Router Solicit messages received by this interface. |
| inTimeExceeded | long | vRtrIfIcmp6InTimeExcds | The value of vRtrIfIcmp6InTimeExcds indicates the number of ICMP Time Exceeded messages received by this interface. |
| inTotalMessages | long | vRtrIfIcmp6InMsgs | The value of vRtrIfIcmp6InMsgs indicates the total number of ICMP messages received by this interface which includes all those counted by vRtrIfIcmp6InErrors. Note that this interface is the interface to which the ICMP messages were addressed which may not be necessarily the input interface for the messages. |
| **VirtualRouterIcmp6InStats**<br>MIB table name: TIMETRA-VRTR-MIB.vRtrIcmp6Table<br>Monitored classes:<br>• rtr.VirtualRouter<br>• vprn.Site | | | |
| inDestinationUnreachable | long | vRtrIcmp6InDestUnreachs | The value of vRtrIcmp6InDestUnreachs indicates the number of ICMP Destination Unreachable messages received by this router instance. |
| inEchoReplies | long | vRtrIcmp6InEchoReplies | The value of vRtrIcmp6InEchoReplies indicates the number of ICMP Echo Reply messages received by this router instance. |
| inEchoRequests | long | vRtrIcmp6InEchos | The value of vRtrIcmp6InEchos indicates the number of ICMP Echo (request) messages received by this router instance. |
| inErrors | long | vRtrIcmp6InErrors | The value of vRtrIcmp6InErrors indicates the number of ICMP messages which this router instance received but determined as having ICMP-specific errors (bad ICMP checksums, bad length , etc.). |
| inNeighborAdvertisements | long | vRtrIcmp6InNbrAdvertisements | The value of vRtrIcmp6InNbrAdvertisements indicates the number of ICMP Neighbor Advertisement messages received by this router instance. |
| inNeighborSolicits | long | vRtrIcmp6InNbrSolicits | The value of vRtrIcmp6InNbrSolicits indicates the number of ICMP Neighbor Solicit messages received by this router instance. |
| inPacketTooBig | long | vRtrIcmp6InPktTooBigs | The value of vRtrIcmp6InPktTooBigs indicates the number of ICMP Packet Too Big messages received by this router instance. |

**(11 of 12)**

| 5620 SAM counter name | Type | MIB counter name | Description |
|---|---|---|---|
| inRedirects | long | vRtrIcmp6InRedirects | The value of vRtrIcmp6InRedirects indicates number of ICMP Redirect messages received by this router instance. |
| inRouterAdvertisements | long | vRtrIcmp6InRtrAdvertisements | The value of vRtrIcmp6InRtrAdvertisements indicates the number of ICMP Router Advertisement messages received by this router instance. |
| inRouterSolicits | long | vRtrIcmp6InRtrSolicits | The value of vRtrIcmp6InRtrSolicits indicates the number of ICMP Router Solicit messages received by this router instance. |
| inTimeExceeded | long | vRtrIcmp6InTimeExcds | The value of vRtrIcmp6InTimeExcds indicates the number of ICMP Time Exceeded messages received by this router instance. |
| inTotalMessages | long | vRtrIcmp6InMsgs | The value of vRtrIcmp6InMsgs indicates the total number of ICMP messages received by this router instance which includes all those counted by vRtrIcmp6InErrors. |

**(12 of 12)**

### Table A-44 service statistics

| 5620 SAM counter name | Type | MIB counter name | Description |
|---|---|---|---|
| **CemSapStats**<br>MIB table name: TIMETRA-SAP-MIB.sapCemStatsTable<br>Monitored class: service.L2AccessInterface | | | |
| cemStatsEgressDroppedPkts | long | sapCemStatsEgressDroppedPkts | The value of sapCemStatsEgressDroppedPkts indicates the total number of packets that were dropped due to errors. |
| cemStatsEgressESs | long | sapCemStatsEgressESs | The value of sapCemStatsEgressESs indicates the number of Error Seconds (ESs) encountered. Any malformed packet, seq. error, LOPS and similar are considered as error seconds. |
| cemStatsEgressFailureCounts | long | sapCemStatsEgressFailureCounts | The value of sapCemStatsEgressFailureCounts indicates the number failure events. A failure event begins when the LOPS failure is declared, and ends when the failure is cleared. |
| cemStatsEgressForwardedPkts | long | sapCemStatsEgressForwardedPkts | The value of sapCemStatsEgressForwardedPkts indicates the number of packets that were successfully forwarded. |
| cemStatsEgressJtrBfrDepth | long | sapCemStatsEgressJtrBfrDepth | The value of sapCemStatsEgressJtrBfrDepth indicates the current packet depth of the jitter buffer. |

**(1 of 30)**

| 5620 SAM counter name | Type | MIB counter name | Description |
|---|---|---|---|
| cemStatsEgressJtrBfrOverruns | long | sapCemStatsEgressJtrBfrOverruns | The value of sapCemStatsEgressJtrBfrOverruns indicates the number of times a packet was dropped because it could not fit in the jitter buffer. |
| cemStatsEgressJtrBfrUnderruns | long | sapCemStatsEgressJtrBfrUnderruns | The value of sapCemStatsEgressJtrBfrUnderruns indicates the number of times a packet needed to be played out and the jitter buffer was empty. |
| cemStatsEgressLBitDropped | long | sapCemStatsEgressLBitDropped | The value of sapCemStatsEgressLBitDropped indicates the number of packets dropped due to the L bit set by the far end. |
| cemStatsEgressMalformedPkts | long | sapCemStatsEgressMalformedPkts | The value of sapCemStatsEgressMalformedPkts indicates the number of packets detected with unexpected size, or bad headers' stack. |
| cemStatsEgressMisOrderDropped | long | sapCemStatsEgressMisOrderDropped | The value of sapCemStatsEgressMisOrderDropped indicates the number of packets detected out of order (via control word sequence numbers), and could not be re-ordered, or could not be placed in the jitter buffer because it was out of the current window. |
| cemStatsEgressMissingPkts | long | sapCemStatsEgressMissingPkts | The value of sapCemStatsEgressMissingPkts indicates the number of missing packets (as detected via control word sequence number gaps). |
| cemStatsEgressMultipleDropped | long | sapCemStatsEgressMultipleDropped | The value of sapCemStatsEgressMultipleDropped indicates the number of packets dropped due to multiple sequence numbers. |
| cemStatsEgressOverrunCounts | long | sapCemStatsEgressOverrunCounts | The value of sapCemStatsEgressOverrunCounts indicates the number of times the jitter buffer went into an overrun state. |
| cemStatsEgressPktsReOrder | long | sapCemStatsEgressPktsReOrder | The value of sapCemStatsEgressPktsReOrder indicates the number of packets detected out of sequence (via control word sequence number), but successfully re-ordered. |
| cemStatsEgressSESs | long | sapCemStatsEgressSESs | The value of sapCemStatsEgressSESs indicates the number of Severely Error Seconds (SESs) encountered. This is when more than 30 percent of the packets within a one second window are missing. |
| cemStatsEgressUASs | long | sapCemStatsEgressUASs | The value of sapCemStatsEgressUASs indicates the number of Unavailable Seconds (UASs) encountered. Any consecutive ten seconds of SESs are counted as one UAS. |

**(2 of 30)**

| 5620 SAM counter name | Type | MIB counter name | Description |
|---|---|---|---|
| cemStatsEgressUnderrunCounts | long | sapCemStatsEgressUnderrunCounts | The value of sapCemStatsEgressUnderrunCounts indicates the number of times the jitter buffer went into an underrun state. |
| cemStatsIngressDroppedPkts | long | sapCemStatsIngressDroppedPkts | The value of sapCemStatsIngressDroppedPkts indicates the total number of packets that were dropped due to errors. |
| cemStatsIngressForwardedPkts | long | sapCemStatsIngressForwardedPkts | The value of sapCemStatsIngressForwardedPkts indicates the number of packets that were successfully forwarded. |
| **L3AccessInterfaceURPFStats**<br>MIB table name: TIMETRA-VRTR-MIB.vRtrIfStatsTable<br>Monitored class: service.L3AccessInterface | | | |
| uRPFCheckFailPkts | UINT128 | vRtrIfuRPFCheckFailPkts | The value of vRtrIfuRPFCheckFailPkts indicates the number of packets that fail uRPF check on this interface. |
| uRPFCheckFailPktsHigh32 | long | vRtrIfuRPFCheckFailPktsHigh32 | The value of vRtrIfuRPFCheckFailPktsHigh32 indicates the high 32 bits of the value of vRtrIfuRPFCheckFailPkts. |
| uRPFCheckFailPktsLow32 | long | vRtrIfuRPFCheckFailPktsLow32 | The value of vRtrIfuRPFCheckFailPktsLow32 indicates the lower 32 bits of the value of vRtrIfuRPFCheckFailPkts. |
| **PppoeSapStats**<br>MIB table name: TIMETRA-PPPOE-MIB.tmnxPppoeSapStatsTable<br>Monitored classes:<br>• ies.ServiceAccessPoint<br>• vprn.ServiceAccessPoint<br>• vpls.L2AccessInterface | | | |
| pppoeSapReceivedDropped | long | tmnxPppoeSapRxDropped | The value of tmnxPppoeSapRxDropped indicates the number of dropped PPPoE packets. |
| pppoeSapReceivedInvalidAcCookie | long | tmnxPppoeSapRxInvalidAcCookie | The value of tmnxPppoeSapRxInvalidAcCookie indicates the number of PPPoE Active Discovery packets received with an invalid AC-Cookie tag. |
| pppoeSapReceivedInvalidCode | long | tmnxPppoeSapRxInvalidCode | The value of tmnxPppoeSapRxInvalidCode indicates the number of PPPoE packets received with an invalid code field. |
| pppoeSapReceivedInvalidLen | long | tmnxPppoeSapRxInvalidLen | The value of tmnxPppoeSapRxInvalidLen indicates the number of PPPoE packets received with an invalid length field. |
| pppoeSapReceivedInvalidSession | long | tmnxPppoeSapRxInvalidSession | The value of tmnxPppoeSapRxInvalidSession indicates the number of PPPoE packets received with an invalid session-id field. |

**(3 of 30)**

| 5620 SAM counter name | Type | MIB counter name | Description |
|---|---|---|---|
| pppoeSapReceivedInvalidTags | long | tmnxPppoeSapRxInvalidTags | The value of tmnxPppoeSapRxInvalidTags indicates the number of PPPoE Active Discovery packets received with invalid tags. |
| pppoeSapReceivedInvalidType | long | tmnxPppoeSapRxInvalidType | The value of tmnxPppoeSapRxInvalidType indicates the number of PPPoE packets received with an invalid type field. |
| pppoeSapReceivedInvalidVersion | long | tmnxPppoeSapRxInvalidVersion | The value of tmnxPppoeSapRxInvalidVersion indicates the number of PPPoE packets received with an invalid version field. |
| pppoeSapReceivedPADI | long | tmnxPppoeSapRxPadi | The value of tmnxPppoeSapRxPadi indicates the number of PADI (PPPoE Active Discovery Initiation) packets received on this SAP. |
| pppoeSapReceivedPADR | long | tmnxPppoeSapRxPadr | The value of tmnxPppoeSapRxPadr indicates the number of PADR (PPPoE Active Discovery Request) packets received on this SAP. |
| pppoeSapReceivedPADT | long | tmnxPppoeSapRxPadt | The value of tmnxPppoeSapRxPadt indicates the number of PADT (PPPoE Active Discovery Terminate) packets received on this SAP. |
| pppoeSapReceivedSession | long | tmnxPppoeSapRxSession | The value of tmnxPppoeSapRxSession indicates the number packets received during the PPP session stage on this SAP. |
| pppoeSapTransmittedPADO | long | tmnxPppoeSapTxPado | The value of tmnxPppoeSapTxPado indicates the number of PADO (PPPoE Active Discovery Offer) packets transmitted on this SAP. |
| pppoeSapTransmittedPADS | long | tmnxPppoeSapTxPads | The value of tmnxPppoeSapTxPads indicates the number of PADS (PPPoE Active Discovery Session) packets transmitted on this SAP. |
| pppoeSapTransmittedPADT | long | tmnxPppoeSapTxPadt | The value of tmnxPppoeSapTxPadt indicates the number of PADT (PPPoE Active Discovery Terminate) packets transmitted on this SAP. |
| pppoeSapTransmittedSession | long | tmnxPppoeSapTxSession | The value of tmnxPppoeSapTxSession indicates the number packets transmitted during the PPP session stage on this SAP. |
| **SapBaseStats**<br>MIB table name: TIMETRA-SAP-MIB.sapBaseStatsTable<br>Monitored classes:<br>• service.L2AccessInterface<br>• service.L3AccessInterface<br>• service.IPsecInterface | | | |
| authenticationPacketsDiscarded | long | sapBaseStatsAuthenticationPktsDiscarded | The number of DHCP packets discarded as result of authentication. |
| authenticationPacketsSuccessful | long | sapBaseStatsAuthenticationPktsSuccess | The number of DHCP packets successfully authenticated. |
| customerId | long | sapBaseStatsCustId | The Customer ID for the associated service. |

**(4 of 30)**

| 5620 SAM counter name | Type | MIB counter name | Description |
|---|---|---|---|
| egressQChipDroppedInProfOctets | UINT128 | sapBaseStatsEgressQchipDroppedInProfOctets | The number of in-profile octets discarded by the egress Qchip due to: MBS exceeded, buffer pool limit exceeded, etc. |
| egressQChipDroppedInProfPackets | UINT128 | sapBaseStatsEgressQchipDroppedInProfPackets | The number of in-profile packets discarded by the egress Qchip due to: MBS exceeded, buffer pool limit exceeded, etc. |
| egressQChipDroppedOutProfOctets | UINT128 | sapBaseStatsEgressQchipDroppedOutProfOctets | The number of out-of-profile packets discarded by the egress Qchip due to: MBS exceeded, buffer pool limit exceeded, etc. |
| egressQChipDroppedOutProfPackets | UINT128 | sapBaseStatsEgressQchipDroppedOutProfPackets | The number of out-of-profile packets discarded by the egress Qchip due to: MBS exceeded, buffer pool limit exceeded, etc. |
| egressQChipForwardedInProfOctets | UINT128 | sapBaseStatsEgressQchipForwardedInProfOctets | The number of in-profile octets (rate below CIR) forwarded by the egress Qchip. |
| egressQChipForwardedInProfPackets | UINT128 | sapBaseStatsEgressQchipForwardedInProfPackets | The number of in-profile packets (rate below CIR) forwarded by the egress Qchip. |
| egressQChipForwardedOutProfOctets | UINT128 | sapBaseStatsEgressQchipForwardedOutProfOctets | The number of out-of-profile octets (rate above CIR) forwarded by the egress Qchip. |
| egressQChipForwardedOutProfPackets | UINT128 | sapBaseStatsEgressQchipForwardedOutProfPackets | The number of out-of-profile packets (rate above CIR) forwarded by the egress Qchip. |
| ingressPChipDroppedOctets | UINT128 | sapBaseStatsIngressPchipDroppedOctets | The number of octets dropped by the ingress Pchip due to: SAP state, ingress MAC, IP or IPv6 filter, same segment discard, bad checksum, etc. |
| ingressPChipDroppedPackets | UINT128 | sapBaseStatsIngressPchipDroppedPackets | The number of packets dropped by the ingress Pchip due to: SAP state, ingress MAC, IP or IPv6 filter, same segment discard, bad checksum, etc. |
| ingressPChipOfferedHiPrioOctets | UINT128 | sapBaseStatsIngressPchipOfferedHiPrioOctets | The number of high priority octets, as determined by the SAP ingress QoS policy, offered by the Pchip to the Qchip. |
| ingressPChipOfferedHiPrioPackets | UINT128 | sapBaseStatsIngressPchipOfferedHiPrioPackets | The number of high priority packets, as determined by the SAP ingress QoS policy, offered by the Pchip to the Qchip. |
| ingressPChipOfferedLoPrioOctets | UINT128 | sapBaseStatsIngressPchipOfferedLoPrioOctets | The number of low priority octets, as determined by the SAP ingress QoS policy, offered by the Pchip to the Qchip. |
| ingressPChipOfferedLoPrioPackets | UINT128 | sapBaseStatsIngressPchipOfferedLoPrioPackets | The number of low priority packets, as determined by the SAP ingress QoS policy, offered by the Pchip to the Qchip. |
| ingressPChipOfferedUncoloredOctets | UINT128 | sapBaseStatsIngressPchipOfferedUncoloredOctets | The number of uncolored octets, as determined by the SAP ingress QoS policy, offered by the Pchip to the Qchip. |

**(5 of 30)**

| 5620 SAM counter name | Type | MIB counter name | Description |
|---|---|---|---|
| ingressPChipOfferedUncoloredPackets | UINT128 | sapBaseStatsIngressPchipOfferedUncoloredPackets | The number of uncolored packets, as determined by the SAP ingress QoS policy, offered by the Pchip to the Qchip. |
| ingressQChipDroppedHiPrioOctets | UINT128 | sapBaseStatsIngressQchipDroppedHiPrioOctets | The number of high priority octets, as determined by the SAP ingress QoS policy, dropped by the Qchip due to: MBS exceeded, buffer pool limit exceeded, etc. |
| ingressQChipDroppedHiPrioPackets | UINT128 | sapBaseStatsIngressQchipDroppedHiPrioPackets | The number of high priority packets, as determined by the SAP ingress QoS policy, dropped by the Qchip due to: MBS exceeded, buffer pool limit exceeded, etc. |
| ingressQChipDroppedLoPrioOctets | UINT128 | sapBaseStatsIngressQchipDroppedLoPrioOctets | The number of low priority octets, as determined by the SAP ingress QoS policy, dropped by the Qchip due to: MBS exceeded, buffer pool limit exceeded, etc. |
| ingressQChipDroppedLoPrioPackets | UINT128 | sapBaseStatsIngressQchipDroppedLoPrioPackets | The number of low priority packets, as determined by the SAP ingress QoS policy, dropped by the Qchip due to: MBS exceeded, buffer pool limit exceeded, etc. |
| ingressQChipForwardedInProfOctets | UINT128 | sapBaseStatsIngressQchipForwardedInProfOctets | The number of in-profile octets (rate below CIR) forwarded by the ingress Qchip. |
| ingressQChipForwardedInProfPackets | UINT128 | sapBaseStatsIngressQchipForwardedInProfPackets | The number of in-profile packets (rate below CIR) forwarded by the ingress Qchip. |
| ingressQChipForwardedOutProfOctets | UINT128 | sapBaseStatsIngressQchipForwardedOutProfOctets | The number of out-of-profile octets (rate above CIR) forwarded by the ingress Qchip. |
| ingressQChipForwardedOutProfPackets | UINT128 | sapBaseStatsIngressQchipForwardedOutProfPackets | The number of out-of-profile packets (rate above CIR) forwarded by the ingress Qchip. |
| **SapEgrQosHsmdaCntrStats**<br>MIB table name: TIMETRA-SAP-MIB.sapEgrQosHsmdaCntrStatsTable<br>Monitored classes:<br>• service.L2AccessInterface<br>• service.L3AccessInterface<br>• service.ServiceAccessPoint<br>• service.IPsecInterface | | | |
| sapEgrHsmdaCntrStCounterId | long | sapEgrHsmdaCntrStCntrId | The value of sapEgrHsmdaCntrStCntrId indicates the counter ID for the statistics. |
| sapEgrHsmdaCntrStCustomerId | long | sapEgrHsmdaCntrStCustId | The value of sapEgrHsmdaCntrStCustId indicates the customer ID for the statistics. |
| sapEgrHsmdaCntrStInProfileOctetsFwd | UINT128 | sapEgrHsmdaCntrStInProfOctFwd | The value of sapEgrHsmdaCntrStInProfOctFwd indicates the number of out-of-profile packets forwarded for the egress counter, specified by the index sapIngHsmdaCntrStCntrId, on this SAP. |

**(6 of 30)**

| 5620 SAM counter name | Type | MIB counter name | Description |
|---|---|---|---|
| sapEgrHsmdaCntrStInProfilePacketsDropped | UINT128 | sapEgrHsmdaCntrStInProfPktDrop | The value of sapEgrHsmdaCntrStInProfPktDrop indicates the number of in-profile packets dropped for the egress counter, specified by the index sapIngHsmdaCntrStCntrId, on this SAP. |
| sapEgrHsmdaCntrStInProfilePacketsFwd | UINT128 | sapEgrHsmdaCntrStInProfPktFwd | The value of sapEgrHsmdaCntrStInProfPktFwd indicates the number of in-profile packets forwarded for the egress counter, specified by the index sapIngHsmdaCntrStCntrId, on this SAP. |
| sapEgrHsmdaCntrStInProfOctetsDropped | UINT128 | sapEgrHsmdaCntrStInProfOctDrop | The value of sapEgrHsmdaCntrStInProfOctDrop indicates the number of out-of-profile packets dropped for the egress counter, specified by the index sapIngHsmdaCntrStCntrId, on this SAP. |
| sapEgrHsmdaCntrStOutProfileOctetsDropped | UINT128 | sapEgrHsmdaCntrStOutProfOctDrop | The value of sapEgrHsmdaCntrStOutProfOctDrop indicates the number of out-of-profile packets dropped for the egress counter, specified by the index sapIngHsmdaCntrStCntrId, on this SAP. |
| sapEgrHsmdaCntrStOutProfileOctetsFwd | UINT128 | sapEgrHsmdaCntrStOutProfOctFwd | The value of sapEgrHsmdaCntrStOutProfOctFwd indicates the number of out-of-profile packets forwarded for the egress counter, specified by the index sapIngHsmdaCntrStCntrId, on this SAP. |
| sapEgrHsmdaCntrStOutProfilePacketsDropped | UINT128 | sapEgrHsmdaCntrStOutProfPktDrop | The value of sapEgrHsmdaCntrStOutProfPktDrop indicates the number of out-of-profile packets dropped for the egress counter, specified by the index sapIngHsmdaCntrStCntrId, on this SAP. |
| sapEgrHsmdaCntrStOutProfilePacketsFwd | UINT128 | sapEgrHsmdaCntrStOutProfPktFwd | The value of sapEgrHsmdaCntrStOutProfPktFwd indicates the number of out-of-profile packets forwarded for the egress counter, specified by the index sapIngHsmdaCntrStCntrId, on this SAP. |
| **SapEgrQosHsmdaQueueStats**<br>MIB table name: TIMETRA-SAP-MIB.sapEgrQosHsmdaQueueStatsTable<br>Monitored classes:<br>• service.L2AccessInterface<br>• service.L3AccessInterface<br>• service.ServiceAccessPoint<br>• service.IPsecInterface | | | |
| sapEgrHsmdaQStatCustomerId | long | sapEgrHsmdaQStatCustId | The value of sapEgrHsmdaQStatCustId indicates the customer ID for the statistics. |
| sapEgrHsmdaQStatInProfileOctetsDropped | UINT128 | sapEgrHsmdaQStatInProfOctDropd | The value of sapEgrHsmdaQStatInProfOctDropd indicates the number of out-of-profile packets dropped on egress on this SAP. |

**(7 of 30)**

| 5620 SAM counter name | Type | MIB counter name | Description |
|---|---|---|---|
| sapEgrHsmdaQStatInProfileOctetsFwd | UINT128 | sapEgrHsmdaQStatInProfOctFwd | The value of sapEgrHsmdaQStatInProfOctFwd indicates the number of out-of-profile packets forwarded on egress on this SAP. |
| sapEgrHsmdaQStatInProfilePacketsDropped | UINT128 | sapEgrHsmdaQStatInProfPktDropd | The value of sapEgrHsmdaQStatInProfPktDropd indicates the number of in-profile packets dropped on egress on this SAP. |
| sapEgrHsmdaQStatInProfilePacketsFwd | UINT128 | sapEgrHsmdaQStatInProfPktFwd | The value of sapEgrHsmdaQStatInProfPktFwd indicates the number of in-profile packets forwarded on egress on this SAP. |
| sapEgrHsmdaQStatOutProfileOctetsDropped | UINT128 | sapEgrHsmdaQStatOutProfOctDropd | The value of sapEgrHsmdaQStatOutProfOctDropd indicates the number of out-of-profile packets dropped on egress on this SAP. |
| sapEgrHsmdaQStatOutProfileOctetsFwd | UINT128 | sapEgrHsmdaQStatOutProfOctFwd | The value of sapEgrHsmdaQStatOutProfOctFwd indicates the number of out-of-profile packets forwarded on egress on this SAP. |
| sapEgrHsmdaQStatOutProfilePacketsDropped | UINT128 | sapEgrHsmdaQStatOutProfPktDropd | The value of sapEgrHsmdaQStatOutProfPktDropd indicates the number of out-of-profile packets dropped on egress on this SAP. |
| sapEgrHsmdaQStatOutProfilePacketsFwd | UINT128 | sapEgrHsmdaQStatOutProfPktFwd | The value of sapEgrHsmdaQStatOutProfPktFwd indicates the number of out-of-profile packets forwarded on egress on this SAP. |
| **SapEgrQosPlcyQueueStats**<br>MIB table name: TIMETRA-SAP-MIB.sapEgrQosPlcyQueueStatsTable<br>Monitored classes:<br>• service.L2AccessInterface<br>• service.L3AccessInterface<br>• service.IPsecInterface | | | |
| droppedInProfOctets | UINT128 | sapEgQosPlcyQueueStatsDroppedInProfOctets | The value of sapEgQosPlcyQueueStatsDroppedInProfOctets indicates the number in-profile octets discarded by the egress Qchip due to: MBS exceeded, buffer pool limit exceeded, etc. |
| droppedInProfPackets | UINT128 | sapEgQosPlcyQueueStatsDroppedInProfPackets | The value of sapEgQosPlcyQueueStatsDroppedInProfPackets indicates the number of in-profile packets discarded by the egress Qchip due to: MBS exceeded, buffer pool limit exceeded, etc. |
| droppedOutProfOctets | UINT128 | sapEgQosPlcyQueueStatsDroppedOutProfOctets | The value of sapEgQosPlcyQueueStatsDroppedOutProfOctets indicates the number out-of-profile octets discarded by the egress Qchip due to: MBS exceeded, buffer pool limit exceeded, etc. |

**(8 of 30)**

| 5620 SAM counter name | Type | MIB counter name | Description |
|---|---|---|---|
| droppedOutProfPackets | UINT128 | sapEgQosPlcyQueueStats DroppedOutProfPackets | The value of sapEgQosPlcyQueueStatsDroppedOutProf Packets indicates the number out-of-profile packets discarded by the egress Qchip due to: MBS exceeded, buffer pool limit exceeded, etc. |
| forwardedInProfOctets | UINT128 | sapEgQosPlcyQueueStats ForwardedInProfOctets | The value of sapEgQosPlcyQueueStatsForwardedInProf Octets indicates the number ofin-profile octets (rate below CIR) forwarded by the egress Qchip. |
| forwardedInProfPackets | UINT128 | sapEgQosPlcyQueueStats ForwardedInProfPackets | The value of sapEgQosPlcyQueueStatsForwardedInProf Packets indicates the number of in-profile packets (rate below CIR) forwarded by the egress Qchip. |
| forwardedOutProfOctets | UINT128 | sapEgQosPlcyQueueStats ForwardedOutProfOctets | The value of sapEgQosPlcyQueueStatsForwardedOutPr ofOctets indicates the number of out-of-profile octets (rate above CIR) forwarded by the egress Qchip. |
| forwardedOutProfPackets | UINT128 | sapEgQosPlcyQueueStats ForwardedOutProfPacket s | The value of sapEgQosPlcyQueueStatsForwardedOutPr ofPackets indicates the number of out-of-profile packets (rate above CIR) forwarded by the egress Qchip. |
| policyId | long | sapEgQosPlcyQueuePlcyId | The row index in the tSapEgressTable corresponding to this egress QoS policy. |
| queueId | long | sapEgQosPlcyQueueId | The value of sapEgQosPlcyQueueId indicates index of the egress QoS queue of this SAP. |
| **SapEgrQosPlcyStats**<br>MIB table name: TIMETRA-SAP-MIB.sapEgrQosPlcyStatsTable<br>Monitored classes:<br>• service.L2AccessInterface<br>• service.L3AccessInterface<br>• service.IPsecInterface | | | |
| droppedInProfOctets | UINT128 | sapEgQosPlcyDroppedInPr ofOctets | The value of the object sapEgQosPlcyDroppedInProfOctets indicates the number of in-profile octets, as determined by the SAP egress QoS policy, dropped by the Qchip due to: MBS exceeded, buffer pool limit exceeded, etc. |
| droppedInProfPackets | UINT128 | sapEgQosPlcyDroppedInPr ofPackets | The value of the object sapEgQosPlcyDroppedInProfPackets indicates the number of in-profile packets, as determined by the SAP egress QoS policy, dropped by the Qchip due to: MBS exceeded, buffer pool limit exceeded, etc. |

**(9 of 30)**

| 5620 SAM counter name | Type | MIB counter name | Description |
|---|---|---|---|
| droppedOutProfOctets | UINT128 | sapEgQosPlcyDroppedOutProfOctets | The value of the object sapEgQosPlcyDroppedOutProfOctets indicates the number of out-profile octets, as determined by the SAP egress QoS policy, dropped by the Qchip due to: MBS exceeded, buffer pool limit exceeded, etc. |
| droppedOutProfPackets | UINT128 | sapEgQosPlcyDroppedOutProfPackets | The value of the object sapEgQosPlcyDroppedOutProfPackets indicates the number of out-profile packets, as determined by the SAP egress QoS policy, dropped by the Qchip due to: MBS exceeded, buffer pool limit exceeded, etc. |
| forwardedInProfOctets | UINT128 | sapEgQosPlcyForwardedInProfOctets | The value of the object sapEgQosPlcyForwardedInProfOctets indicates the number of in-profile octets (rate below CIR) forwarded by the egress Qchip. |
| forwardedInProfPackets | UINT128 | sapEgQosPlcyForwardedInProfPackets | The value of the object sapEgQosPlcyForwardedInProfPackets indicates the number of in-profile packets (rate below CIR) forwarded by the egress Qchip. |
| forwardedOutProfOctets | UINT128 | sapEgQosPlcyForwardedOutProfOctets | The value of the object sapEgQosPlcyForwardedOutProfOctets indicates the number of out-of-profile octets (rate above CIR) forwarded by the egress Qchip. |
| forwardedOutProfPackets | UINT128 | sapEgQosPlcyForwardedOutProfPackets | The value of the object sapEgQosPlcyForwardedOutProfPackets indicates the number of out-of-profile packets (rate above CIR) forwarded by the egress Qchip. |
| policyId | long | sapEgQosPlcyId | The value of the object sapEgQosPlcyId indicates the row index in the tSapEgressTable corresponding to this egress QoS policy, or one if no policy is specified. |
| **SapEgrQosQueueStats**<br>MIB table name: TIMETRA-SAP-MIB.sapEgrQosQueueStatsTable<br>Monitored classes:<br>• service.L2AccessInterface<br>• service.L3AccessInterface<br>• service.IPsecInterface | | | |
| customerId | long | sapEgrQosCustId | The Customer ID for the associated service. |
| droppedInProfOctets | UINT128 | sapEgrQosQueueStatsDroppedInProfOctets | The number of in-profile octets discarded by the egress Qchip due to: MBS exceeded, buffer pool limit exceeded, etc. |
| droppedInProfPackets | UINT128 | sapEgrQosQueueStatsDroppedInProfPackets | The number of in-profile packets discarded by the egress Qchip due to: MBS exceeded, buffer pool limit exceeded, etc. |

**(10 of 30)**

| 5620 SAM counter name | Type | MIB counter name | Description |
|---|---|---|---|
| droppedOutProfOctets | UINT128 | sapEgrQosQueueStatsDroppedOutProfOctets | The number of out-of-profile octets discarded by the egress Qchip due to: MBS exceeded, buffer pool limit exceeded, etc. |
| droppedOutProfPackets | UINT128 | sapEgrQosQueueStatsDroppedOutProfPackets | The number of out-of-profile packets discarded by the egress Qchip due to: MBS exceeded, buffer pool limit exceeded, etc. |
| forwardedInProfOctets | UINT128 | sapEgrQosQueueStatsForwardedInProfOctets | The number of in-profile octets (rate below CIR) forwarded by the egress Qchip. |
| forwardedInProfPackets | UINT128 | sapEgrQosQueueStatsForwardedInProfPackets | The number of in-profile packets (rate below CIR) forwarded by the egress Qchip. |
| forwardedOutProfOctets | UINT128 | sapEgrQosQueueStatsForwardedOutProfOctets | The number of out-of-profile octets (rate above CIR) forwarded by the egress Qchip. |
| forwardedOutProfPackets | UINT128 | sapEgrQosQueueStatsForwardedOutProfPackets | The number of out-of-profile packets (rate above CIR) forwarded by the egress Qchip. |
| queueId | long | sapEgrQosQueueId | The index of the egress QoS queue of this SAP. |
| **SapEgrQosSchedStats**<br>MIB table name: TIMETRA-SAP-MIB.sapEgrQosSchedStatsTable<br>Monitored classes:<br>• service.L2AccessInterface<br>• service.L3AccessInterface<br>• service.IPsecInterface | | | |
| customerId | long | sapEgrQosSchedCustId | The Customer ID for the associated service. |
| forwardedOctets | UINT128 | sapEgrQosSchedStatsForwardedOctets | The number of forwarded octets by the egress Qchip, as determined by the SAP egress scheduler policy. |
| forwardedPackets | UINT128 | sapEgrQosSchedStatsForwardedPackets | The number of forwarded packets by the egress Qchip, as determined by the SAP egress scheduler policy. |
| qosSchedName | String | sapEgrQosSchedName | The index of the egress QoS scheduler of this SAP. |
| **SapEgrSchedPlcyPortStats**<br>MIB table name: TIMETRA-SAP-MIB.sapEgrSchedPlcyPortStatsTable<br>Monitored classes:<br>• service.L2AccessInterface<br>• service.L3AccessInterface<br>• service.IPsecInterface | | | |
| forwardedOctets | UINT128 | sapEgrSchedPlcyPortStatsFwdOct | The value of sapEgrSchedPlcyPortStatsFwdOct indicates the number of forwarded octets,as determined by the SAP egress scheduler policy, offered by the Pchip to the Qchip. |

**(11 of 30)**

| 5620 SAM counter name | Type | MIB counter name | Description |
|---|---|---|---|
| forwardedPackets | UINT128 | sapEgrSchedPlcyPortStatsFwdPkt | The value of sapEgrSchedPlcyPortStatsFwdPkt indicates the number of forwarded packets, as determined by the SAP egress scheduler policy, offered by the Pchip to the Qchip. |
| **SapEgrSchedPlcyStats**<br>MIB table name: TIMETRA-SAP-MIB.sapEgrSchedPlcyStatsTable<br>Monitored classes:<br>• service.L2AccessInterface<br>• service.L3AccessInterface<br>• service.IPsecInterface | | | |
| forwardedOctets | UINT128 | sapEgrSchedPlcyStatsFwdOct | The number of octets forwarded by the egress Qchip, as determined by the SAP egress scheduler policy. |
| forwardedPackets | UINT128 | sapEgrSchedPlcyStatsFwdPkt | The number of packets forwarded by the egress Qchip, as determined by the SAP egress scheduler policy. |
| **SapIngQosHsmdaCntrStats**<br>MIB table name: TIMETRA-SAP-MIB.sapIngQosHsmdaCntrStatsTable<br>Monitored classes:<br>• service.L2AccessInterface<br>• service.L3AccessInterface<br>• service.ServiceAccessPoint<br>• service.IPsecInterface | | | |
| sapIngHsmdaCntrStAllOctetsOffered | UINT128 | sapIngHsmdaCntrStAllOctOffered | The value of sapIngHsmdaCntrStAllOctOffered indicates the total number of octets offered on ingress on this SAP. |
| sapIngHsmdaCntrStAllPacketsOffered | UINT128 | sapIngHsmdaCntrStAllPktOffered | The value of sapIngHsmdaCntrStAllPktOffered indicates the total number of packets offered on ingress on this SAP. |
| sapIngHsmdaCntrStCounterId | long | sapIngHsmdaCntrStCntrId | The value of sapIngHsmdaCntrStCntrId indicates the counter ID for the statistics. |
| sapIngHsmdaCntrStCusomerId | long | sapIngHsmdaCntrStCustId | The value of sapIngHsmdaCntrStCustId indicates the customer ID for the statistics. |
| sapIngHsmdaCntrStHiOctetsDropped | UINT128 | sapIngHsmdaCntrStHiOctDrop | The value of sapIngHsmdaCntrStHiOctDrop indicates the number of high-priority octets dropped for the ingress counter, specified by the index sapIngHsmdaCntrStCntrId, on this SAP. |
| sapIngHsmdaCntrStHiPacketsDropped | UINT128 | sapIngHsmdaCntrStHiPktDrop | The value of sapIngHsmdaCntrStHiPktDrop indicates the number of high-priority packets dropped for the ingress counter, specified by the index sapIngHsmdaCntrStCntrId, on this SAP. |

**(12 of 30)**

| 5620 SAM counter name | Type | MIB counter name | Description |
|---|---|---|---|
| sapIngHsmdaCntrStInProfileOctetsFwd | UINT128 | sapIngHsmdaCntrStInProfOctFwd | The value of sapIngHsmdaCntrStInProfOctFwd indicates the number of out-of-profile packets forwarded for the ingress counter, specified by the index sapIngHsmdaCntrStCntrId, on this SAP. |
| sapIngHsmdaCntrStInProfilePacketsFwd | UINT128 | sapIngHsmdaCntrStInProfPktFwd | The value of sapIngHsmdaCntrStInProfPktFwd indicates the number of in-profile packets forwarded for the ingress counter, specified by the index sapIngHsmdaCntrStCntrId, on this SAP. |
| sapIngHsmdaCntrStLoOctetsDropped | UINT128 | sapIngHsmdaCntrStLoOctDrop | The value of sapIngHsmdaCntrStLoOctDrop indicates the number of low-priority octets dropped for the ingress counter, specified by the index sapIngHsmdaCntrStCntrId, on this SAP. |
| sapIngHsmdaCntrStLoPacketsDropped | UINT128 | sapIngHsmdaCntrStLoPktDrop | The value of sapIngHsmdaCntrStLoPktDrop indicates the number of low-priority packets dropped for the ingress counter, specified by the index sapIngHsmdaCntrStCntrId, on this SAP. |
| sapIngHsmdaCntrStOutProfileOctetsFwd | UINT128 | sapIngHsmdaCntrStOutProfOctFwd | The value of sapIngHsmdaCntrStOutProfOctFwd indicates the number of out-of-profile packets forwarded for the ingress counter, specified by the index sapIngHsmdaCntrStCntrId, on this SAP. |
| sapIngHsmdaCntrStOutProfilePacketsFwd | UINT128 | sapIngHsmdaCntrStOutProfPktFwd | The value of sapIngHsmdaCntrStOutProfPktFwd indicates the number of out-of-profile packets forwarded for the ingress counter, specified by the index sapIngHsmdaCntrStCntrId, on this SAP. |
| **SapIngQosPlcyQueueStats**<br>MIB table name: TIMETRA-SAP-MIB.sapIngQosPlcyQueueStatsTable<br>Monitored classes:<br>• service.L2AccessInterface<br>• service.L3AccessInterface<br>• service.IPsecInterface | | | |
| droppedHiPrioOctets | UINT128 | sapIgQosPlcyQueueStatsDroppedHiPrioOctets | The value of sapIgQosPlcyQueueStatsDroppedHiPrioOctets indicates the number ofhigh priority octets, as determined by the SAP ingress QoS policy, dropped by the Qchip due to: MBS exceeded, buffer pool limit exceeded, etc. |
| droppedHiPrioPackets | UINT128 | sapIgQosPlcyQueueStatsDroppedHiPrioPackets | The value of sapIgQosPlcyQueueStatsDroppedHiPrioPackets indicates the number of high priority packets, as determined by the SAP ingress QoS policy, dropped by the Qchip due to: MBS exceeded, buffer pool limit exceeded, etc. |

**(13 of 30)**

| 5620 SAM counter name | Type | MIB counter name | Description |
|---|---|---|---|
| droppedLoPrioOctets | UINT128 | sapIgQosPlcyQueueStatsDroppedLoPrioOctets | The value of sapIgQosPlcyQueueStatsDroppedLoPrioOctets indicates the number of low priority octets, as determined by the SAP ingress QoS policy, dropped by the Qchip due to: MBS exceeded, buffer pool limit exceeded, etc. |
| droppedLoPrioPackets | UINT128 | sapIgQosPlcyQueueStatsDroppedLoPrioPackets | The value of sapIgQosPlcyQueueStatsDroppedLoPrioPackets indicates the number of low priority packets, as determined by the SAP ingress QoS policy, dropped by the Qchip due to: MBS exceeded, buffer pool limit exceeded, etc. |
| forwardedInProfOctets | UINT128 | sapIgQosPlcyQueueStatsForwardedInProfOctets | The value of sapIgQosPlcyQueueStatsForwardedInProfOctets indicates the number of in-profile octets (rate below CIR) forwarded by the ingress Qchip. |
| forwardedInProfPackets | UINT128 | sapIgQosPlcyQueueStatsForwardedInProfPackets | The value of sapIgQosPlcyQueueStatsForwardedInProfPackets indicates the number of in-profile packets (rate below CIR) forwarded by the ingress Qchip. |
| forwardedOutProfOctets | UINT128 | sapIgQosPlcyQueueStatsForwardedOutProfOctets | The value of sapIgQosPlcyQueueStatsForwardedOutProfOctets indicates the number of out-of-profile octets (rate above CIR) forwarded by the ingress Qchip. |
| forwardedOutProfPackets | UINT128 | sapIgQosPlcyQueueStatsForwardedOutProfPackets | The value of sapIgQosPlcyQueueStatsForwardedOutProfPackets indicates the number of out-of-profile packets (rate above CIR) forwarded by the ingress Qchip. |
| offeredHiPrioOctets | UINT128 | sapIgQosPlcyQueueStatsOfferedHiPrioOctets | The value of sapIgQosPlcyQueueStatsOfferedHiPrioOctets indicates the number of high priority octets, as determined by the SAP ingress QoS policy, offered by the Pchip to the Qchip. |
| offeredHiPrioPackets | UINT128 | sapIgQosPlcyQueueStatsOfferedHiPrioPackets | The value of sapIgQosPlcyQueueStatsOfferedHiPrioPackets indicates the number of high priority packets, as determined by the SAP ingress QoS policy, offered by the Pchip to the Qchip. |
| offeredLoPrioOctets | UINT128 | sapIgQosPlcyQueueStatsOfferedLoPrioOctets | The value of sapIgQosPlcyQueueStatsOfferedLoPrioOctets indicates the number of low priority octets, as determined by the SAP ingress QoS policy, offered by the Pchip to the Qchip. |
| offeredLoPrioPackets | UINT128 | sapIgQosPlcyQueueStatsOfferedLoPrioPackets | The value of sapIgQosPlcyQueueStatsOfferedLoPrioPackets indicates the number of low priority packets, as determined by the SAP ingress QoS policy, offered by the Pchip to the Qchip. |

**(14 of 30)**

| 5620 SAM counter name | Type | MIB counter name | Description |
|---|---|---|---|
| policyId | long | sapIgQosPlcyQueuePlcyId | The value of the object sapIgQosPlcyQueuePlcyId indicates the row index in the tSapIngressTable corresponding to this ingress QoS policy. |
| queueId | long | sapIgQosPlcyQueueId | The index of the ingress QoS queue of this SAP used by the policy indicated by sapIgQosPlcyQueuePlcyId. |
| uncoloredOctetsOffered | UINT128 | sapIgQosPlcyQueueStatsUncoloredOctetsOffered | The value of sapIgQosPlcyQueueStatsUncoloredOctetsOffered indicates the number of uncolored octets offered to the ingress Qchip. |
| uncoloredPacketsOffered | UINT128 | sapIgQosPlcyQueueStatsUncoloredPacketsOffered | The value of sapIgQosPlcyQueueStatsUncoloredPacketsOffered indicates the number of uncolored packets offered to the ingress Qchip. |
| **SapIngQosPlcyStats**<br>MIB table name: TIMETRA-SAP-MIB.sapIngrQosPlcyStatsTable<br>Monitored classes:<br>• service.L2AccessInterface<br>• service.L3AccessInterface<br>• service.IPsecInterface | | | |
| droppedHiPrioOctets | UINT128 | sapIgQosPlcyDroppedHiPrioOctets | The value of the object sapIgQosPlcyDroppedHiPrioOctets indicates the number of high priority octets, as determined by the SAP ingress QoS policy, dropped by the Qchip due to: MBS exceeded, buffer pool limit exceeded, etc. |
| droppedHiPrioPackets | UINT128 | sapIgQosPlcyDroppedHiPrioPackets | The value of the object sapIgQosPlcyDroppedHiPrioPackets indicates the number of high priority packets, as determined by the SAP ingress QoS policy, dropped by the Qchip due to: MBS exceeded, buffer pool limit exceeded, etc. |
| droppedLoPrioOctets | UINT128 | sapIgQosPlcyDroppedLoPrioOctets | The value of the object sapIgQosPlcyDroppedLoPrioOctets indicates the number of low priority octets, as determined by the SAP ingress QoS policy, dropped by the Qchip due to: MBS exceeded, buffer pool limit exceeded, etc. |
| droppedLoPrioPackets | UINT128 | sapIgQosPlcyDroppedLoPrioPackets | The value of the object sapIgQosPlcyDroppedLoPrioPackets indicates the number of low priority packets, as determined by the SAP ingress QoS policy, dropped by the Qchip due to: MBS exceeded, buffer pool limit exceeded, etc. |
| forwardedInProfOctets | UINT128 | sapIgQosPlcyForwardedInProfOctets | The value of the object sapIgQosPlcyForwardedInProfOctets indicates the number of in-profile octets (rate below CIR) forwarded by the ingress Qchip. |

**(15 of 30)**

| 5620 SAM counter name | Type | MIB counter name | Description |
|---|---|---|---|
| forwardedInProfPackets | UINT128 | sapIgQosPlcyForwardedInProfPackets | The value of the object sapIgQosPlcyForwardedInProfPackets indicates the number of in-profile packets (rate below CIR) forwarded by the ingress Qchip. |
| forwardedOutProfOctets | UINT128 | sapIgQosPlcyForwardedOutProfOctets | The value of the object sapIgQosPlcyForwardedOutProfOctets indicates the number of out-of-profile octets (rate above CIR) forwarded by the ingress Qchip. |
| forwardedOutProfPackets | UINT128 | sapIgQosPlcyForwardedOutProfPackets | The value of the object sapIgQosPlcyForwardedOutProfPackets indicates the number of out-of-profile packets (rate above CIR) forwarded by the ingress Qchip. |
| policyId | long | sapIgQosPlcyId | The value of the object sapIgQosPlcyId indicates the row index in the tSapIngressTable corresponding to this ingress QoS policy, or one if no policy is specified. |
| **SapIngQosQueueStats**<br>MIB table name: TIMETRA-SAP-MIB.sapIngQosQueueStatsTable<br>Monitored classes:<br>• service.L2AccessInterface<br>• service.L3AccessInterface<br>• service.IPsecInterface | | | |
| customerId | long | sapIngQosCustId | The Customer ID for the associated service. |
| droppedHiPrioOctets | UINT128 | sapIngQosQueueStatsDroppedHiPrioOctets | The number of high priority octets, as determined by the SAP ingress QoS policy, dropped by the Qchip due to: MBS exceeded, buffer pool limit exceeded, etc. |
| droppedHiPrioPackets | UINT128 | sapIngQosQueueStatsDroppedHiPrioPackets | The number of high priority packets, as determined by the SAP ingress QoS policy, dropped by the Qchip due to: MBS exceeded, buffer pool limit exceeded, etc. |
| droppedLoPrioOctets | UINT128 | sapIngQosQueueStatsDroppedLoPrioOctets | The number of low priority octets, as determined by the SAP ingress QoS policy, dropped by the Qchip due to: MBS exceeded, buffer pool limit exceeded, etc. |
| droppedLoPrioPackets | UINT128 | sapIngQosQueueStatsDroppedLoPrioPackets | The number of low priority packets, as determined by the SAP ingress QoS policy, dropped by the Qchip due to: MBS exceeded, buffer pool limit exceeded, etc. |
| forwardedInProfOctets | UINT128 | sapIngQosQueueStatsForwardedInProfOctets | The number of in-profile octets (rate below CIR) forwarded by the ingress Qchip. |
| forwardedInProfPackets | UINT128 | sapIngQosQueueStatsForwardedInProfPackets | The number of in-profile packets (rate below CIR) forwarded by the ingress Qchip. |

**(16 of 30)**

| 5620 SAM counter name | Type | MIB counter name | Description |
|---|---|---|---|
| forwardedOutProfOctets | UINT128 | sapIngQosQueueStatsForwardedOutProfOctets | The number of out-of-profile octets (rate above CIR) forwarded by the ingress Qchip. |
| forwardedOutProfPackets | UINT128 | sapIngQosQueueStatsForwardedOutProfPackets | The number of out-of-profile packets (rate above CIR) forwarded by the ingress Qchip. |
| offeredHiPrioOctets | UINT128 | sapIngQosQueueStatsOfferedHiPrioOctets | The number of high priority octets, as determined by the SAP ingress QoS policy, offered by the Pchip to the Qchip. |
| offeredHiPrioPackets | UINT128 | sapIngQosQueueStatsOfferedHiPrioPackets | The number of high priority packets, as determined by the SAP ingress QoS policy, offered by the Pchip to the Qchip. |
| offeredLoPrioOctets | UINT128 | sapIngQosQueueStatsOfferedLoPrioOctets | The number of low priority octets, as determined by the SAP ingress QoS policy, offered by the Pchip to the Qchip. |
| offeredLoPrioPackets | UINT128 | sapIngQosQueueStatsOfferedLoPrioPackets | The number of low priority packets, as determined by the SAP ingress QoS policy, offered by the Pchip to the Qchip. |
| queueId | long | sapIngQosQueueId | The index of the ingress QoS queue of this SAP. |
| uncoloredOctetsOffered | UINT128 | sapIngQosQueueStatsUncoloredOctetsOffered | The number of uncolored octets offered to the ingress Qchip. |
| uncoloredPacketsOffered | UINT128 | sapIngQosQueueStatsUncoloredPacketsOffered | The number of uncolored packets offered to the ingress Qchip. |
| **SapIngQosSchedStats**<br>MIB table name: TIMETRA-SAP-MIB.sapIngQosSchedStatsTable<br>Monitored classes:<br>• service.L2AccessInterface<br>• service.L3AccessInterface<br>• service.IPsecInterface | | | |
| customerId | long | sapIngQosSchedCustId | The Customer ID for the associated service. |
| forwardedOctets | UINT128 | sapIngQosSchedStatsForwardedOctets | The number of forwarded octets, as determined by the SAP ingress scheduler policy, offered by the Pchip to the Qchip. |
| forwardedPackets | UINT128 | sapIngQosSchedStatsForwardedPackets | The number of forwarded packets, as determined by the SAP ingress scheduler policy, offered by the Pchip to the Qchip. |
| qosSchedName | String | sapIngQosSchedName | The index of the ingress QoS scheduler of this SAP. |
| **SapIngSchedPlcyPortStats**<br>MIB table name: TIMETRA-SAP-MIB.sapIngSchedPlcyPortStatsTable<br>Monitored classes:<br>• service.L2AccessInterface<br>• service.L3AccessInterface<br>• service.IPsecInterface | | | |

**(17 of 30)**

| 5620 SAM counter name | Type | MIB counter name | Description |
|---|---|---|---|
| forwardedOctets | UINT128 | sapIngSchedPlcyPortStats FwdOct | The value of sapIngSchedPlcyPortStatsFwdOct indicates the number of forwarded octets,as determined by the SAP ingress scheduler policy, offered by the Pchip to the Qchip. |
| forwardedPackets | UINT128 | sapIngSchedPlcyPortStats FwdPkt | The value of sapIngSchedPlcyPortStatsFwdPkt indicates the number of forwarded packets, as determined by the SAP ingress scheduler policy, offered by the Pchip to the Qchip. |
| **SapIngSchedPlcyStats**<br>MIB table name: TIMETRA-SAP-MIB.sapIngSchedPlcyStatsTable<br>Monitored classes:<br>• service.L2AccessInterface<br>• service.L3AccessInterface<br>• service.IPsecInterface | | | |
| forwardedOctets | UINT128 | sapIngSchedPlcyStatsFwd Oct | The number of forwarded octets, as determined by the SAP ingress scheduler policy, offered by the Pchip to the Qchip. |
| forwardedPackets | UINT128 | sapIngSchedPlcyStatsFwd Pkt | The number of forwarded packets, as determined by the SAP ingress scheduler policy, offered by the Pchip to the Qchip. |
| **VdoGrpSrcAdiStats**<br>MIB table name: TIMETRA-VIDEO-MIB.tmnxVdoSGAdiStatTable<br>Monitored class: service.ZoneAdiChl | | | |
| vdoSGAdiAbortReq | long | tmnxVdoSGAdiAbortReq | The value of tmnxVdoSGAdiAbortReq indicates the total number of abort requests received from the Ad Insert (ADI) server. |
| vdoSGAdiAliveReq | long | tmnxVdoSGAdiAliveReq | The value of tmnxVdoSGAdiAliveReq indicates the total number of alive messages received from the Ad Insert (ADI) server. |
| vdoSGAdiCueReq | long | tmnxVdoSGAdiCueReq | The value of tmnxVdoSGAdiCueReq indicates the total number of total number of cue requests sent to the Ad Insert (ADI) server. |
| vdoSGAdiInitReq | long | tmnxVdoSGAdiInitReq | The value of tmnxVdoSGAdiInitReq indicates the total number of init requests received from the Ad Insert (ADI) server. |
| vdoSGAdiServerAddr | String | tmnxVdoSGAdiServerAddr | The value of tmnxVdoSGAdiServerAddr indicates the address of Ad Insert (ADI) server on this channel. |
| vdoSGAdiServerAddrType | int | tmnxVdoSGAdiServerAddr Type | The value of tmnxVdoSGAdiServerAddrType indicates the type of Ad Insert (ADI) server address represented by tmnxVdoSGAdiServerAddr. |

**(18 of 30)**

| 5620 SAM counter name | Type | MIB counter name | Description |
|---|---|---|---|
| vdoSGAdiServerUptime | long | tmnxVdoSGAdiServerUptime | The value of tmnxVdoSGAdiServerUptime indicates the time in seconds since the connection with Ad Insert (ADI) server was established. |
| vdoSGAdiSpliceReq | long | tmnxVdoSGAdiSpliceReq | The value of tmnxVdoSGAdiSpliceReq indicates the total number of splice requests received from the Ad Insert (ADI) server. |
| vdoSGAdiSucAbortResp | long | tmnxVdoSGAdiSucAbortResp | The value of tmnxVdoSGAdiSucAbortResp indicates the total number of successful abort responses sent to the Ad Insert (ADI) server. |
| vdoSGAdiSucAliveResp | long | tmnxVdoSGAdiSucAliveResp | The value of tmnxVdoSGAdiSucAliveResp indicates the total number of successful alive messages sent to the Ad Insert (ADI) server. |
| vdoSGAdiSucCueResp | long | tmnxVdoSGAdiSucCueResp | The value of tmnxVdoSGAdiSucCueResp indicates the total number of successful cue responses received from the Ad Insert (ADI) server. |
| vdoSGAdiSucInitResp | long | tmnxVdoSGAdiSucInitResp | The value of tmnxVdoSGAdiSucInitResp indicates the total number of successful init responses sent to the Ad Insert (ADI) server. |
| vdoSGAdiSucSpliceInCompResp | long | tmnxVdoSGAdiSucSpliceInCompResp | The value of tmnxVdoSGAdiSucSpliceInCompResp indicates the total number of successful splice-in complete responses sent to the Ad Insert (ADI) server. |
| vdoSGAdiSucSpliceOutCompResp | long | tmnxVdoSGAdiSucSpliceOutCompResp | The value of tmnxVdoSGAdiSucSpliceOutCompResp indicates the total number of successful splice-out complete responses sent to the Ad Insert (ADI) server. |
| vdoSGAdiSucSpliceResp | long | tmnxVdoSGAdiSucSpliceResp | The value of tmnxVdoSGAdiSucSpliceResp indicates the total number of successful splice responses sent to the Ad Insert (ADI) server. |
| vdoSGAdiUnknownSCTE30Req | long | tmnxVdoSGAdiUnknownSCTE30Req | The value of tmnxVdoSGAdiUnknownSCTE30Req indicates the total number of invalid Society of Cable Telecommunications Engineers 30 (SCTE-30) requests received from the Ad Insert (ADI) server. |
| vdoSGAdiUnsucAbortResp | long | tmnxVdoSGAdiUnsucAbortResp | The value of tmnxVdoSGAdiUnsucAbortResp indicates the total number of unsuccessful abort responses sent to the Ad Insert (ADI) server. |
| vdoSGAdiUnSucAliveResp | long | tmnxVdoSGAdiUnSucAliveResp | The value of tmnxVdoSGAdiUnSucAliveResp indicates the total number of unsuccessful alive messages sent to the Ad Insert (ADI) server. |

**(19 of 30)**

| 5620 SAM counter name | Type | MIB counter name | Description |
|---|---|---|---|
| vdoSGAdiUnsucCueResp | long | tmnxVdoSGAdiUnsucCueResp | The value of tmnxVdoSGAdiUnsucCueResp indicates the total number of unsuccessful cue responses received from the Ad Insert (ADI) server. |
| vdoSGAdiUnsucInitResp | long | tmnxVdoSGAdiUnsucInitResp | The value of tmnxVdoSGAdiUnsucInitResp indicates the total number of unsuccessful init responses sent to the Ad Insert (ADI) server. |
| vdoSGAdiUnsucSpliceOutComRes | long | tmnxVdoSGAdiUnsucSpliceOutComRes | The value of tmnxVdoSGAdiUnsucSpliceOutComRes indicates the total number of unsuccessful splice-out complete responses sent to the Ad Insert (ADI) server. |
| vdoSGAdiUnsucSpliceResp | long | tmnxVdoSGAdiUnsucSpliceResp | The value of tmnxVdoSGAdiUnsucSpliceResp indicates the total number of unsuccessful splice responses sent to the Ad Insert (ADI) server. |
| **VdoGrpSrcSpliceStats**<br>MIB table name: TIMETRA-VIDEO-MIB.tmnxVdoSGSpliceStatusTable<br>Monitored class: service.ZoneAdiChl | | | |
| vdoSGSpliceAbortReason | long | tmnxVdoSGSpliceAbortReason | The value of tmnxVdoSGSpliceAbortReason indicates the reason if a splice operation has been aborted. If the value of this object is equal to 'none', then the splice has not been aborted. |
| vdoSGSpliceAdServerAddr | String | tmnxVdoSGSpliceAdServerAddr | The value of tmnxVdoSGSpliceAdServerAddr indicates the address of the Ad Insert (ADI) server that issued the splice request. |
| vdoSGSpliceAdServerAddrType | int | tmnxVdoSGSpliceAdServerAddrType | The value of tmnxVdoSGSpliceAdServerAddrType indicates the type of Ad Insert (ADI) server address represented by tmnxVdoSGSpliceAdServerAddr. |
| vdoSGSpliceBlkFramePTS | String | tmnxVdoSGSpliceBlkFramePTS | The value of tmnxVdoSGSpliceBlkFramePTS indicates the Presentation Timestamp (PTS) of the first black frame. |
| vdoSGSpliceDurationPlayed | long | tmnxVdoSGSpliceDurationPlayed | The value of tmnxVdoSGSpliceDurationPlayed indicates the splice duration, in seconds, played by the splicer. |
| vdoSGSpliceDurationReq | long | tmnxVdoSGSpliceDurationReq | The value of tmnxVdoSGSpliceDurationReq indicates the splice duration, in seconds, of the ad requested by the Ad Insert (ADI) server. |
| vdoSGSpliceMaxAdPTS | String | tmnxVdoSGSpliceMaxAdPTS | The value of tmnxVdoSGSpliceMaxAdPTS indicates the maximum Presentation Timestamp (PTS) value of the last Group of Pictures (GOP) of ad stream (non-black frame). |

**(20 of 30)**

| 5620 SAM counter name | Type | MIB counter name | Description |
|---|---|---|---|
| vdoSGSpliceMinNwPTS | String | tmnxVdoSGSpliceMinNwPTS | The value of tmnxVdoSGSpliceMinNwPTS indicates the minimum Presentation Timestamp (PTS) value from the first Group of Pictures (GOP) of the network stream after the splice out has occured. |
| vdoSGSpliceNumBlkFrames | long | tmnxVdoSGSpliceNumBlkFrames | The value of tmnxVdoSGSpliceNumBlkFrames indicates the number of black frames inserted. |
| vdoSGSplicePriorSessionId | long | tmnxVdoSGSplicePriorSessionId | The value of tmnxVdoSGSplicePriorSessionId indicates the prior session id of the ad. If the value of this object is not equal to 0xFFFFFFFF, then this splice is a back-to-back ad insertion. |
| vdoSGSpliceRate | long | tmnxVdoSGSpliceRate | The value of tmnxVdoSGSpliceRate indicates the rate of the ad stream, in kilo-bits per second (kbps), received by the splicer. |
| vdoSGSpliceSessionId | long | tmnxVdoSGSpliceSessionId | The value of tmnxVdoSGSpliceSessionId indicates the session ID of the ad request. |
| vdoSGSpliceSpliceInSeqNum | long | tmnxVdoSGSpliceSpliceInSeqNum | The value of tmnxVdoSGSpliceSpliceInSeqNum indicates the sequence number at which the splice-in to the ad occurred. |
| vdoSGSpliceSpliceOutSeqNum | long | tmnxVdoSGSpliceSpliceOutSeqNum | The value of tmnxVdoSGSpliceSpliceOutSeqNum indicates the sequence number at which the splice-out to the ad occurred. |
| vdoSGSpliceStartTime | long | tmnxVdoSGSpliceStartTime | The value of tmnxVdoSGSpliceStartTime indicates the start time of splice in seconds. |
| vdoSGSpliceStatus | long | tmnxVdoSGSpliceStatus | The value of tmnxVdoSGSpliceStatus indicates the status of this splice request. |
| **VdoGrpSrcStats**<br>MIB table name: TIMETRA-VIDEO-MIB.tmnxVdoGrpSrcStatTable<br>Monitored classes:<br>• service.AdiChl<br>• service.ZoneAdiChl | | | |
| vdoGrpSrcADIAdminState | int | tmnxVdoGrpSrcADIAdminState | The value of tmnxVdoGrpSrcADIAdminState indicates whether Ad Insertion is enabled on the video ISA. |
| vdoGrpSrcADICurrentState | long | tmnxVdoGrpSrcADICurrentState | The value of tmnxVdoGrpSrcADICurrentState indicates whether the video ISA is transmitting network stream or ads. |
| vdoGrpSrcADIPATChanges | long | tmnxVdoGrpSrcADIPATChanges | The value of tmnxVdoGrpSrcADIPATChanges indicates the total number of Program Association Table (PAT) version changes. |
| vdoGrpSrcADIPATVersion | long | tmnxVdoGrpSrcADIPATVersion | The value of tmnxVdoGrpSrcADIPATVersion indicates the version of the Program Association Table (PAT). |

**(21 of 30)**

| 5620 SAM counter name | Type | MIB counter name | Description |
|---|---|---|---|
| vdoGrpSrcADIPMTChanges | long | tmnxVdoGrpSrcADIPMTChanges | The value of tmnxVdoGrpSrcADIPMTChanges indicates the total number of Program Map Table (PMT) version changes. |
| vdoGrpSrcADIPMTVersion | long | tmnxVdoGrpSrcADIPMTVersion | The value of tmnxVdoGrpSrcADIPMTVersion indicates the version of the Program Map Table (PMT). |
| vdoGrpSrcADIRxPackets | UINT128 | tmnxVdoGrpSrcADIRxPackets | The value of tmnxVdoGrpSrcADIRxPackets indicates the total number of Ad Insert (ADI) packets received by the video ISA. |
| vdoGrpSrcADIRxSCTE35MsgDisc | long | tmnxVdoGrpSrcADIRxSCTE35MsgDisc | The value of tmnxVdoGrpSrcADIRxSCTE35MsgDisc indicates the total number of Society of Cable Telecommunications Engineers (SCTE-35) messages received by the video ISA and discarded. SCTE-35 messages with unsupported commands and encrypted SCTE-35 messages are discarded. |
| vdoGrpSrcADIRxSCTE35MsgEnc | long | tmnxVdoGrpSrcADIRxSCTE35MsgEnc | The value of tmnxVdoGrpSrcADIRxSCTE35MsgEnc indicates the total number of encrypted Society of Cable Telecommunications Engineers (SCTE-35) messages received by the video ISA. |
| vdoGrpSrcADIRxSCTE35Msgs | long | tmnxVdoGrpSrcADIRxSCTE35Msgs | The value of tmnxVdoGrpSrcADIRxSCTE35Msgs indicates the total number of Society of Cable Telecommunications Engineers (SCTE-35) messages received by the video ISA. |
| vdoGrpSrcADIRxSCTE35MsgUnsup | long | tmnxVdoGrpSrcADIRxSCTE35MsgUnsup | The value of tmnxVdoGrpSrcADIRxSCTE35MsgUnsup indicates the total number of unsupported Society of Cable Telecommunications Engineers (SCTE-35) messages received by the video ISA. |
| vdoGrpSrcADITxPackets | UINT128 | tmnxVdoGrpSrcADITxPackets | The value of tmnxVdoGrpSrcADITxPackets indicates the total number of Ad Insert (ADI) packets sent by the video ISA. |
| vdoGrpSrcADIUnsuppTSLenPkts | long | tmnxVdoGrpSrcADIUnsuppTSLenPkts | The value of tmnxVdoGrpSrcADIUnsuppTSLenPkts indicates the total number of data packets received whose size is not equal to 188 bytes. The value of this object is valid only when the corresponding tmnxVdoGrpADIServerState value is set to 'true'. |
| vdoGrpSrcAdminBW | long | tmnxVdoGrpSrcAdminBW | The value of tmnxVdoGrpSrcAdminBW indicates the administrative bandwidth of the multicast group. |
| vdoGrpSrcAdminRTBufferSize | long | tmnxVdoGrpSrcAdminRTBufferSize | The value of tmnxVdoGrpSrcAdminRTBufferSize indicates the number of milliseconds worth of channel packets to store for the Retransmission (RT) server. |

**(22 of 30)**

| 5620 SAM counter name | Type | MIB counter name | Description |
|---|---|---|---|
| vdoGrpSrcBufferSize | long | tmnxVdoGrpSrcBufferSize | The value of tmnxVdoGrpSrcBufferSize indicates the number of milliseconds worth of channel packets stored by the Retransmission (RT) server or Fast Channel Change (FCC) server on this channel. |
| vdoGrpSrcDupSeqNumber | long | tmnxVdoGrpSrcDupSeqNumber | The value of tmnxVdoGrpSrcDupSeqNumber indicates the total number of Real-time Transport Protocol (RTP) packets detected with a duplicate sequence number. |
| vdoGrpSrcFCCSrvrAdminState | int | tmnxVdoGrpSrcFCCSrvrAdminState | The value of tmnxVdoGrpSrcFCCSrvrAdminState indicates whether the Fast Channel Change (FCC) server is enabled on this channel. |
| vdoGrpSrcFCCSrvrChnlType | int | tmnxVdoGrpSrcFCCSrvrChnlType | The value of tmnxVdoGrpSrcFCCSrvrChnlType indicates the type of channel served by the Fast Channel Change (FCC) server. |
| vdoGrpSrcFCCSrvrRxFailedReq | long | tmnxVdoGrpSrcFCCSrvrRxFailedReq | The value of tmnxVdoGrpSrcFCCSrvrRxFailedReq indicates the total number of failed requests at the Fast Channel Change (FCC) server. |
| vdoGrpSrcFCCSrvrRxFCCReq | long | tmnxVdoGrpSrcFCCSrvrRxFCCReq | The value of tmnxVdoGrpSrcFCCSrvrRxFCCReq indicates the total number of Fast Channel Change (FCC) requests received by the FCC server. |
| vdoGrpSrcFCCSrvrTxBytes | UINT128 | tmnxVdoGrpSrcFCCSrvrTxBytes | The value of tmnxVdoGrpSrcFCCSrvrTxBytes indicates the total number of bytes sent by the Fast Channel Change (FCC) server. |
| vdoGrpSrcFCCSrvrTxFCCReplies | long | tmnxVdoGrpSrcFCCSrvrTxFCCReplies | The value of tmnxVdoGrpSrcFCCSrvrTxFCCReplies indicates the total number of Fast Channel Change (FCC) replies sent by the FCC server. |
| vdoGrpSrcFCCSrvrTxPackets | UINT128 | tmnxVdoGrpSrcFCCSrvrTxPackets | The value of tmnxVdoGrpSrcFCCSrvrTxPackets indicates the total number of packets sent by the Fast Channel Change (FCC) server. |
| vdoGrpSrcGroupAddress | String | tmnxVdoGrpSrcGroupAddress | The value of tmnxVdoGrpSrcGroupAddress indicates the IP multicast group address for which this entry contains information. |
| vdoGrpSrcGrpAddrType | int | tmnxVdoGrpSrcGrpAddrType | The value of tmnxVdoGrpSrcGrpAddrType indicates the type of IP multicast group address represented by tmnxVdoGrpSrcGroupAddress. |
| vdoGrpSrcRTClientAdminState | int | tmnxVdoGrpSrcRTClientAdminState | The value of tmnxVdoGrpSrcRTClientAdminState indicates the administrative state of the retransmission client. |

**(23 of 30)**

| 5620 SAM counter name | Type | MIB counter name | Description |
|---|---|---|---|
| vdoGrpSrcRTClientFailedReq | long | tmnxVdoGrpSrcRTClientFailedReq | The value of tmnxVdoGrpSrcRTClientFailedReq indicates the total number of Retransmission (RT) requests that could not be generated by the RT client due to gaps in the sequence numbers. |
| vdoGrpSrcRTClientGapsDetectd | long | tmnxVdoGrpSrcRTClientGapsDetectd | The value of tmnxVdoGrpSrcRTClientGapsDetectd indicates the total number of gaps in the sequence numbers detected by the Retransmission (RT) client. |
| vdoGrpSrcRTClientRTSrvrPort | long | tmnxVdoGrpSrcRTClientRTSrvrPort | The value of tmnxVdoGrpSrcRTClientRTSrvrPort indicates the Retransmission (RT) server port for this channel. |
| vdoGrpSrcRTClientRxReTxBytes | UINT128 | tmnxVdoGrpSrcRTClientRxReTxBytes | The value of tmnxVdoGrpSrcRTClientRxReTxBytes indicates the total number of retransmitted bytes received by the Retransmission (RT) client. |
| vdoGrpSrcRTClientRxReTxPkts | UINT128 | tmnxVdoGrpSrcRTClientRxReTxPkts | The value of tmnxVdoGrpSrcRTClientRxReTxPkts indicates the total number of retransmitted packets received by the Retransmission (RT) client. |
| vdoGrpSrcRTClientTxRTReq | long | tmnxVdoGrpSrcRTClientTxRTReq | The value of tmnxVdoGrpSrcRTClientTxRTReq indicates the total number of Retransmission (RT) requests sent by the RT client. |
| vdoGrpSrcRTClientTxRTReqReTx | long | tmnxVdoGrpSrcRTClientTxRTReqReTx | The value of tmnxVdoGrpSrcRTClientTxRTReqReTx indicates the total number of repeat Retransmission (RT) requests attempted by the RT client. |
| vdoGrpSrcRTClntRTSvrAddr | String | tmnxVdoGrpSrcRTClntRTSvrAddr | The value of tmnxVdoGrpSrcRTClntRTSvrAddr indicates the address of the Retransmission (RT) server for this channel. |
| vdoGrpSrcRTClntRTSvrAddrType | int | tmnxVdoGrpSrcRTClntRTSvrAddrType | The value of tmnxVdoGrpSrcRTClntRTSvrAddrType indicates the type of address represented by tmnxVdoGrpSrcRTClntRTSvrAddr. |
| vdoGrpSrcRTSrvrAdminState | int | tmnxVdoGrpSrcRTSrvrAdminState | The value of tmnxVdoGrpSrcRTSrvrAdminState indicates the administrative state of the Retransmission (RT) server. |
| vdoGrpSrcRTSrvrRtpPktsReq | long | tmnxVdoGrpSrcRTSrvrRtpPktsReq | The value of tmnxVdoGrpSrcRTSrvrRtpPktsReq indicates the totoal number of Real-time Transport Protocol (RTP) packets requested in the Real-time Transport Control Protocol (RTCP) feedback (FB) messages received on this channel. |

**(24 of 30)**

| 5620 SAM counter name | Type | MIB counter name | Description |
|---|---|---|---|
| vdoGrpSrcRTSrvrRxFailedReq | long | tmnxVdoGrpSrcRTSrvrRxFailedReq | The value of tmnxVdoGrpSrcRTSrvrRxFailedReq indicates the total number of failed requests at the Retransmission (RT) server due to congestion or lack of resources. |
| vdoGrpSrcRTSrvrRxRTReq | long | tmnxVdoGrpSrcRTSrvrRxRTReq | The value of tmnxVdoGrpSrcRTSrvrRxRTReq indicates the total number of RT requests received by the Retransmission (RT) server. |
| vdoGrpSrcRTSrvrTxBytes | UINT128 | tmnxVdoGrpSrcRTSrvrTxBytes | The value of tmnxVdoGrpSrcRTSrvrTxBytes indicates the total number of bytes sent by the Retransmission (RT) server. |
| vdoGrpSrcRTSrvrTxPackets | UINT128 | tmnxVdoGrpSrcRTSrvrTxPackets | The value of tmnxVdoGrpSrcRTSrvrTxPackets indicates the total number of packets sent by the Retransmission (RT) server. |
| vdoGrpSrcRTSrvrTxRTReplies | long | tmnxVdoGrpSrcRTSrvrTxRTReplies | The value of tmnxVdoGrpSrcRTSrvrTxRTReplies indicates the total number of Retransmission (RT) replies sent by the RT server. |
| vdoGrpSrcRxBytes | UINT128 | tmnxVdoGrpSrcRxBytes | The value of tmnxVdoGrpSrcRxBytes indicates the total number of bytes received on this multicast channel. |
| vdoGrpSrcRxInvalidPackets | UINT128 | tmnxVdoGrpSrcRxInvalidPackets | The value of tmnxVdoGrpSrcRxInvalidPackets indicates the total number of invalid packets received on this multicast channel. |
| vdoGrpSrcRxPackets | UINT128 | tmnxVdoGrpSrcRxPackets | The value of tmnxVdoGrpSrcRxPackets indicates the total number of packets received on this multicast channel. |
| vdoGrpSrcSourceAddress | String | tmnxVdoGrpSrcSourceAddress | The value of tmnxVdoGrpSrcSourceAddress indicates the IP multicast source address for which this entry contains information. |
| vdoGrpSrcSrcAddrType | int | tmnxVdoGrpSrcSrcAddrType | The value of tmnxVdoGrpSrcSrcAddrType indicates the type of IP multicast source address represented by tmnxVdoGrpSrcSourceAddress. |
| vdoGrpSrcSSRCId | long | tmnxVdoGrpSrcSSRCId | The value of tmnxVdoGrpSrcSSRCId indicates the synchronization source (SSRC) identifier carried in the Real-time Transport Protocol (RTP) header to identify the source of a stream of RTP packets. |
| vdoGrpSrcStreamType | long | tmnxVdoGrpSrcStreamType | The value of tmnxVdoGrpSrcStreamType indicates the type of stream being transmitted from the video ISA perspective. Network stream is the stream ingressing the video ISA and being stored by it. Zone stream is the stream egressing the video ISA into which AD streams will be inserted. |

**(25 of 30)**

| 5620 SAM counter name | Type | MIB counter name | Description |
|---|---|---|---|
| vdoGrpSrcTxBytes | UINT128 | tmnxVdoGrpSrcTxBytes | The value of tmnxVdoGrpSrcTxBytes indicates the total number of bytes transmitted on this multicast channel. |
| vdoGrpSrcTxFailedPackets | UINT128 | tmnxVdoGrpSrcTxFailedPackets | The value of tmnxVdoGrpSrcTxFailedPackets indicates the total number of failures during the transmission of packets on this multicast channel. Failure happens when the packet to be sent is not stored in the video cache. |
| vdoGrpSrcTxPackets | UINT128 | tmnxVdoGrpSrcTxPackets | The value of tmnxVdoGrpSrcTxPackets indicates the total number of packets transmitted on this multicast channel. |
| vdoGrpSrcUDPDestPort | long | tmnxVdoGrpSrcUDPDestPort | The value of tmnxVdoGrpSrcUDPDestPort indicates the UDP destination port in the received RTP multicast stream. |
| vdoGrpSrcUDPSrcPort | long | tmnxVdoGrpSrcUDPSrcPort | The value of tmnxVdoGrpSrcUDPSrcPort indicates the UDP source port in the received RTP multicast stream. |
| vdoGrpSrcUptime | long | tmnxVdoGrpSrcUptime | The value of tmnxVdoGrpSrcUptime indicates the time since this source group entry was created. |
| vdoGrpSrcVdoGrpId | long | tmnxVdoGrpSrcVdoGrpId | The value of tmnxVdoGrpSrcVdoGrpId indicates the identifier of the video group. |
| **VdoIfStats**<br>MIB table name: TIMETRA-VIDEO-MIB.tmnxVdoIfStatTable<br>Monitored class: service.VideoIfIpAddress | | | |
| vdoIfScte30InitSessions | long | tmnxVdoIfScte30InitSessions | The value of tmnxVdoIfScte30InitSessions indicates the total number of scte30 init sessions with the Ad Insert (ADI) servers for this interface. |
| vdoIfScte30TcpSessions | long | tmnxVdoIfScte30TcpSessions | The value of tmnxVdoIfScte30TcpSessions indicates the total number of scte30 tcp sessions with the Ad Insert (ADI) servers for this interface. |
| vdoIfStatFCCSrRxHdFailedReq | UINT128 | tmnxVdoIfStatFCCSrRxHdFailedReq | The value of tmnxVdoIfStatFCCSrRxHdFailedReq indicates the total number of failed Fast Channel Change (FCC) requests received from High Definition (HD) channels on this interface. |
| vdoIfStatFCCSrRxHdFCCReq | UINT128 | tmnxVdoIfStatFCCSrRxHdFCCReq | The value of tmnxVdoIfStatFCCSrRxHdFCCReq indicates the total number of Fast Channel Change (FCC) requests received from High Definition (HD) channels on this interface. |
| vdoIfStatFCCSrRxPipFailedReq | UINT128 | tmnxVdoIfStatFCCSrRxPipFailedReq | The value of tmnxVdoIfStatFCCSrRxPipFailedReq indicates the total number of failed Fast Channel Change (FCC) requests received from Picture-In-Picture (PIP) channels on this interface. |

**(26 of 30)**

| 5620 SAM counter name | Type | MIB counter name | Description |
|---|---|---|---|
| vdoIfStatFCCSrRxPipFCCReq | UINT128 | tmnxVdoIfStatFCCSrRxPipFCCReq | The value of tmnxVdoIfStatFCCSrRxPipFCCReq indicates the total number of Fast Channel Change (FCC) requests received from Picture-In-Picture (PIP) channels on this interface. |
| vdoIfStatFCCSrRxSdFailedReq | UINT128 | tmnxVdoIfStatFCCSrRxSdFailedReq | The value of tmnxVdoIfStatFCCSrRxSdFailedReq indicates the total number of failed Fast Channel Change (FCC) requests received from Standard Definition (SD) channels on this interface. |
| vdoIfStatFCCSrRxSdFCCReq | UINT128 | tmnxVdoIfStatFCCSrRxSdFCCReq | The value of tmnxVdoIfStatFCCSrRxSdFCCReq indicates the total number of Fast Channel Change (FCC) requests received from Standard Definition (SD) channels on this interface. |
| vdoIfStatFCCSrTxHdBytes | UINT128 | tmnxVdoIfStatFCCSrTxHdBytes | The value of tmnxVdoIfStatFCCSrTxHdBytes indicates the total number of High Definition (HD) channel bytes sent from this interface. |
| vdoIfStatFCCSrTxHdFCCReplies | UINT128 | tmnxVdoIfStatFCCSrTxHdFCCReplies | The value of tmnxVdoIfStatFCCSrTxHdFCCReplies indicates the total number of High Definition (HD) channel Fast Channel Change (FCC) replies sent from this interface. |
| vdoIfStatFCCSrTxHdPackets | UINT128 | tmnxVdoIfStatFCCSrTxHdPackets | The value of tmnxVdoIfStatFCCSrTxHdPackets indicates the total number of High Definition (HD) channel packets sent from this interface. |
| vdoIfStatFCCSrTxPipBytes | UINT128 | tmnxVdoIfStatFCCSrTxPipBytes | The value of tmnxVdoIfStatFCCSrTxPipBytes indicates the total number of Picture-In-Picture (PIP) channel bytes sent from this interface. |
| vdoIfStatFCCSrTxPipFCCRplies | UINT128 | tmnxVdoIfStatFCCSrTxPipFCCRplies | The value of tmnxVdoIfStatFCCSrTxPipFCCRplies indicates the total number of Picture-In-Picture (PIP) channel Fast Channel Change (FCC) replies sent from this interface. |
| vdoIfStatFCCSrTxPipPackets | UINT128 | tmnxVdoIfStatFCCSrTxPipPackets | The value of tmnxVdoIfStatFCCSrTxPipPackets indicates the total number of Picture-In-Picture (PIP) channel packets sent from this interface. |
| vdoIfStatFCCSrTxSdBytes | UINT128 | tmnxVdoIfStatFCCSrTxSdBytes | The value of tmnxVdoIfStatFCCSrTxSdBytes indicates the total number of Standard Definition (SD) channel bytes sent from this interface. |

**(27 of 30)**

| 5620 SAM counter name | Type | MIB counter name | Description |
|---|---|---|---|
| vdoIfStatFCCSrTxSdFCCReplies | UINT128 | tmnxVdoIfStatFCCSrTxSdFCCReplies | The value of tmnxVdoIfStatFCCSrTxSdFCCReplies indicates the total number of Standard Definition (SD) channel Fast Channel Change (FCC) replies sent from this interface. |
| vdoIfStatFCCSrTxSdPackets | UINT128 | tmnxVdoIfStatFCCSrTxSdPackets | The value of tmnxVdoIfStatFCCSrTxSdPackets indicates the total number of Standard Definition (SD) channel packets sent from this interface. |
| vdoIfStatHdFCCServerMode | int | tmnxVdoIfStatHdFCCServerMode | The value of tmnxVdoIfStatHdFCCServerMode indicates the mode of the High Definition (HD) Fast Channel Change (FCC) server on this interface. |
| vdoIfStatHdRTServerState | boolean | tmnxVdoIfStatHdRTServerState | The value of tmnxVdoIfStatHdRTServerState indicates whether the High Definition (HD) retransmission server is enabled on this interface. |
| vdoIfStatPipFCCServerMode | int | tmnxVdoIfStatPipFCCServerMode | The value of tmnxVdoIfStatPipFCCServerMode indicates the mode of the Picture-in-Picture (PIP) Fast Channel Change (FCC) server on this interface. |
| vdoIfStatPipRTServerState | boolean | tmnxVdoIfStatPipRTServerState | The value of tmnxVdoIfStatPipRTServerState indicates whether the Picture-in-Picture (PIP) retransmission server is enabled on this interface. |
| vdoIfStatRTSvrHdRtpPktsReq | UINT128 | tmnxVdoIfStatRTSvrHdRtpPktsReq | The value of tmnxVdoIfStatRTSvrHdRtpPktsReq indicates the total number of High Definition (HD) channel Real-time Transport Protocol (RTP) packets requested in the Real-time Transport Control Protocol (RTCP) feedback (FB) messages received on this interface. |
| vdoIfStatRTSvrPipRtpPktsReq | UINT128 | tmnxVdoIfStatRTSvrPipRtpPktsReq | The value of tmnxVdoIfStatRTSvrPipRtpPktsReq indicates the total number of Picture-In-Picture (PIP) channel Real-time Transport Protocol (RTP) packets requested in the Real-time Transport Control Protocol (RTCP) feedback (FB) messages received on this interface. |
| vdoIfStatRTSvrRxHdFailedReq | UINT128 | tmnxVdoIfStatRTSvrRxHdFailedReq | The value of tmnxVdoIfStatRTSvrRxHdFailedReq indicates the total number of failed Retransmission (RT) requests received from High Definition (HD) channels on this interface. |
| vdoIfStatRTSvrRxHdRTReq | UINT128 | tmnxVdoIfStatRTSvrRxHdRTReq | The value of tmnxVdoIfStatRTSvrRxHdRTReq indicates the total number of Retransmission (RT) requests received from High Definition (HD) channels on this interface. |

**(28 of 30)**

| 5620 SAM counter name | Type | MIB counter name | Description |
|---|---|---|---|
| vdoIfStatRTSvrRxPipFailedReq | UINT128 | tmnxVdoIfStatRTSvrRxPipFailedReq | The value of tmnxVdoIfStatRTSvrRxPipFailedReq indicates the total number of failed Retransmission (RT) requests received from Picture-In-Picture (PIP) channels on this interface. |
| vdoIfStatRTSvrRxPipRTReq | UINT128 | tmnxVdoIfStatRTSvrRxPipRTReq | The value of tmnxVdoIfStatRTSvrRxPipRTReq indicates the total number of Retransmission (RT) requests received from Picture-In-Picture (PIP) channels on this interface. |
| vdoIfStatRTSvrRxSdFailedReq | UINT128 | tmnxVdoIfStatRTSvrRxSdFailedReq | The value of tmnxVdoIfStatRTSvrRxSdFailedReq indicates the total number of failed Retransmission (RT) requests received from Standard Definition (SD) channels on this interface. |
| vdoIfStatRTSvrRxSdRTReq | UINT128 | tmnxVdoIfStatRTSvrRxSdRTReq | The value of tmnxVdoIfStatRTSvrRxSdRTReq indicates the total number of Retransmission (RT) requests received from Standard Definition (SD) channels on this interface. |
| vdoIfStatRTSvrSdRtpPktsReq | UINT128 | tmnxVdoIfStatRTSvrSdRtpPktsReq | The value of tmnxVdoIfStatRTSvrSdRtpPktsReq indicates the total number of Standard Definition (SD) channel Real-time Transport Protocol (RTP) packets requested in the Real-time Transport Control Protocol (RTCP) feedback (FB) messages received on this interface. |
| vdoIfStatRTSvrTxHdBytes | UINT128 | tmnxVdoIfStatRTSvrTxHdBytes | The value of tmnxVdoIfStatRTSvrTxHdBytes indicates the total number of High Definition (HD) channel bytes sent from this interface. |
| vdoIfStatRTSvrTxHdPackets | UINT128 | tmnxVdoIfStatRTSvrTxHdPackets | The value of tmnxVdoIfStatRTSvrTxHdPackets indicates the total number of High Definition (HD) channel packets sent from this interface. |
| vdoIfStatRTSvrTxHdRTReplies | UINT128 | tmnxVdoIfStatRTSvrTxHdRTReplies | The value of tmnxVdoIfStatRTSvrTxHdRTReplies indicates the total number of High Definition (HD) channel Retransmission (RT) replies sent from this interface. |
| vdoIfStatRTSvrTxPipBytes | UINT128 | tmnxVdoIfStatRTSvrTxPipBytes | The value of tmnxVdoIfStatRTSvrTxPipBytes indicates the total number of Picture-In-Picture (PIP) channel bytes sent from this interface. |
| vdoIfStatRTSvrTxPipPackets | UINT128 | tmnxVdoIfStatRTSvrTxPipPackets | The value of tmnxVdoIfStatRTSvrTxPipPackets indicates the total number of Picture-In-Picture (PIP) channel packets sent from this interface. |

**(29 of 30)**

| 5620 SAM counter name | Type | MIB counter name | Description |
|---|---|---|---|
| vdoIfStatRTSvrTxPipRTReplies | UINT128 | tmnxVdoIfStatRTSvrTxPipRTReplies | The value of tmnxVdoIfStatRTSvrTxPipRTReplies indicates the total number of Picture-In-Picture (PIP) channel Retransmission (RT) replies sent from this interface. |
| vdoIfStatRTSvrTxSdBytes | UINT128 | tmnxVdoIfStatRTSvrTxSdBytes | The value of tmnxVdoIfStatRTSvrTxSdBytes indicates the total number of Standard Definition (SD) channel bytes sent from this interface. |
| vdoIfStatRTSvrTxSdPackets | UINT128 | tmnxVdoIfStatRTSvrTxSdPackets | The value of tmnxVdoIfStatRTSvrTxSdPackets indicates the total number of Standard Definition (SD) channel packets sent from this interface. |
| vdoIfStatRTSvrTxSdRTReplies | UINT128 | tmnxVdoIfStatRTSvrTxSdRTReplies | The value of tmnxVdoIfStatRTSvrTxSdRTReplies indicates the total number of Standard Definition (SD) channel Retransmission (RT) replies sent from this interface. |
| vdoIfStatSdFCCServerMode | int | tmnxVdoIfStatSdFCCServerMode | The value of tmnxVdoIfStatSdFCCServerMode indicates the mode of the Standard Definition (SD) Fast Channel Change (FCC) server on this interface. |
| vdoIfStatSdRTServerState | boolean | tmnxVdoIfStatSdRTServerState | The value of tmnxVdoIfStatSdRTServerState indicates whether the Standard Definition (SD) retransmission server is enabled on this interface. |
| vdoIfStatTxFailedPackets | UINT128 | tmnxVdoIfStatTxFailedPackets | The value of tmnxVdoIfStatTxFailedPackets indicates the total number of failures during the transmission of packets from this video interface. Failure happens when the packet to be sent is not stored in the video cache. |

**(30 of 30)**

### Table A-45 sitesec statistics

| 5620 SAM counter name | Type | MIB counter name | Description |
|---|---|---|---|
| **CpmFilterQueueStats**<br>MIB table name: TIMETRA-SECURITY-MIB.tCpmFilterQueueStatsTable<br>Monitored class: sitesec.CpmFilterQueue | | | |
| droppedInOctets | UINT128 | tCpmFilterQInProfileDropOctets | The value of tCpmFilterQInProfileDropOctets indicates the number of octets complying to the queue Qos profile dropped from the tCpmFilterQueueEntry with the same index. |

**(1 of 3)**

| 5620 SAM counter name | Type | MIB counter name | Description |
|---|---|---|---|
| droppedInPackets | UINT128 | tCpmFilterQInProfileDropPkts | The value of tCpmFilterQInProfileDropPkts indicates the number of packets complying to the queue Qos profile dropped from the tCpmFilterQueueEntry with the same index. |
| droppedOutOctets | UINT128 | tCpmFilterQOutProfileDropOctets | The value of tCpmFilterQOutProfileDropOctets indicates the number of octets not complying to the queue Qos profile dropped from the tCpmFilterQueueEntry with the same index. |
| droppedOutPackets | UINT128 | tCpmFilterQOutProfileDropPkts | The value of tCpmFilterQOutProfileDropPkts indicates the number of packets not complying to the queue Qos profile dropped from the tCpmFilterQueueEntry with the same index. |
| forwardedInOctets | UINT128 | tCpmFilterQInProfileFwdOctets | The value of tCpmFilterQInProfileFwdOctets indicates the number of octets complying to the queue Qos profile forwarded from the tCpmFilterQueueEntry with the same index. |
| forwardedInPackets | UINT128 | tCpmFilterQInProfileFwdPkts | The value of tCpmFilterQInProfileFwdPkts indicates the number of packets complying to the queue Qos profile forwarded from the tCpmFilterQueueEntry with the same index. |
| forwardedOutOctets | UINT128 | tCpmFilterQOutProfileFwdOctets | The value of tCpmFilterQOutProfileFwdOctets indicates the number of octets not complying to the queue Qos profile forwarded from the tCpmFilterQueueEntry with the same index. |
| forwardedOutPackets | UINT128 | tCpmFilterQOutProfileFwdPkts | The value of tCpmFilterQOutProfileFwdPkts indicates the number of packets not complying to the queue Qos profile forwarded from the tCpmFilterQueueEntry with the same index. |
| **CpmIpFilterStats**<br>MIB table name: TIMETRA-SECURITY-MIB.tCpmIpFilterStatsTable<br>Monitored class: sitesec.CpmIpFilterEntry | | | |
| droppedPackets | UINT128 | tCpmIpFilterStatsDroppedPkts | The value of tCpmIpFilterStatsDroppedPkts indicates the number of packets dropped due to the tCpmIpFilterEntry with the same index. |
| forwardedPackets | UINT128 | tCpmIpFilterStatsForwardedPkts | The value of tCpmIpFilterStatsForwardedPkts indicates the number of packets forwarded due to the tCpmIpFilterEntry with the same index. |

**(2 of 3)**

| 5620 SAM counter name | Type | MIB counter name | Description |
|---|---|---|---|
| **CpmIPv6FilterStats**<br>MIB table name: TIMETRA-SECURITY-MIB.tCpmIPv6FilterStatsTable<br>Monitored class: sitesec.CpmIPv6FilterEntry | | | |
| droppedPackets | UINT128 | tCpmIPv6FilterStatsDroppedPkts | The value of tCpmIPv6FilterStatsDroppedPkts indicates the number of packets dropped due to the tCpmIPv6FilterEntry with the same index. |
| forwardedPackets | UINT128 | tCpmIPv6FilterStatsForwardedPkts | The value of tCpmIPv6FilterStatsForwardedPkts indicates the number of packets forwarded due to the tCpmIPv6FilterEntry with the same index. |
| **CpmMacFilterStats**<br>MIB table name: TIMETRA-SECURITY-MIB.tCpmMacFilterStatsTable<br>Monitored class: sitesec.CpmMacFilterEntry | | | |
| droppedPackets | UINT128 | tCpmMacFilterStatsDroppedPkts | The value of tCpmMacFilterStatsDroppedPkts indicates the number of packets dropped due to the tCpmMacFilterEntry with the same index. |
| forwardedPackets | UINT128 | tCpmMacFilterStatsForwardedPkts | The value of tCpmMacFilterStatsForwardedPkts indicates the number of packets forwarded due to the tCpmMacFilterEntry with the same index. |
| **MafEntryStats**<br>MIB table name: TIMETRA-SECURITY-MIB.tmnxIPMafMatchTable<br>Monitored class: sitesec.MafEntry | | | |
| matchCount | UINT128 | tmnxIPMafMatchCount | The value of tmnxIPMafMatchCount indicates the number of times a management packet has matched this filter entry. |

**(3 of 3)**

### Table A-46 sonetequipment statistics

| 5620 SAM counter name | Type | MIB counter name | Description |
|---|---|---|---|
| **SonetFarEndLineCurrentStats**<br>MIB table name: SONET-MIB.sonetFarEndLineCurrentTable<br>Monitored class: equipment.PhysicalPort | | | |
| codingViolations | long | sonetFarEndLineCurrentCVs | The counter associated with the number of Far End Coding Violations reported via the far end block error count encountered by a SONET/SDH Medium/Section/Line interface in the current 15 minute interval. |
| erroredSeconds | long | sonetFarEndLineCurrentESs | The counter associated with the number of Far End Errored Seconds encountered by a SONET/SDH interface in the current 15 minute interval. |

**(1 of 9)**

| 5620 SAM counter name | Type | MIB counter name | Description |
|---|---|---|---|
| severelyErroredSeconds | long | sonetFarEndLineCurrentSESs | The counter associated with the number of Far End Severely Errored Seconds encountered by a SONET/SDH Medium/Section/Line interface in the current 15 minute interval. |
| unavailableSeconds | long | sonetFarEndLineCurrentUASs | The counter associated with the number of Far End Unavailable Seconds encountered by a SONET/SDH Medium/Section/Line interface in the current 15 minute interval. |
| **SonetFarEndLineIntervalStats**<br>MIB table name: SONET-MIB.sonetFarEndLineIntervalTable<br>Monitored class: equipment.PhysicalPort | | | |
| codingViolations | long | sonetFarEndLineIntervalCVs | The counter associated with the number of Far End Coding Violations reported via the far end block error count encountered by a SONET/SDH Line interface in a particular 15-minute interval in the past 24 hours. |
| erroredSeconds | long | sonetFarEndLineIntervalESs | The counter associated with the number of Far End Errored Seconds encountered by a SONET/SDH Line interface in a particular 15-minute interval in the past 24 hours. |
| intervalNumber | int | sonetFarEndLineIntervalNumber | A number between 1 and 96, which identifies the interval for which the set of statistics is available. The interval identified by 1 is the most recently completed 15 minute interval, and the interval identified by N is the interval immediately preceding the one identified by N-1. |
| severelyErroredSeconds | long | sonetFarEndLineIntervalSESs | The counter associated with the number of Far End Severely Errored Seconds encountered by a SONET/SDH Line interface in a particular 15-minute interval in the past 24 hours. |
| unavailableSeconds | long | sonetFarEndLineIntervalUASs | The counter associated with the number of Far End Unavailable Seconds encountered by a SONET/SDH Line interface in a particular 15-minute interval in the past 24 hours. |
| **SonetFarEndPathCurrentStats**<br>MIB table name: SONET-MIB.sonetFarEndPathCurrentTable<br>Monitored classes:<br>• sonetequipment.Sts1Channel<br>• sonetequipment.Sts3Channel<br>• sonetequipment.Sts12Channel<br>• sonetequipment.Sts48Channel<br>• sonetequipment.Sts192Channel<br>• sonetequipment.Tu3Channel | | | |

**(2 of 9)**

| 5620 SAM counter name | Type | MIB counter name | Description |
|---|---|---|---|
| codingViolations | long | sonetFarEndPathCurrentCVs | The counter associated with the number of Far End Coding Violations reported via the far end block error count encountered by a SONET/SDH Path interface in the current 15 minute interval. |
| erroredSeconds | long | sonetFarEndPathCurrentESs | The counter associated with the number of Far End Errored Seconds encountered by a SONET/SDH interface in the current 15 minute interval. |
| severelyErroredSeconds | long | sonetFarEndPathCurrentSESs | The counter associated with the number of Far End Severely Errored Seconds encountered by a SONET/SDH Path interface in the current 15 minute interval. |
| unavailableSeconds | long | sonetFarEndPathCurrentUASs | The counter associated with the number of Far End Unavailable Seconds encountered by a SONET/SDH Path interface in the current 15 minute interval. |
| **SonetFarEndPathIntervalStats**<br>MIB table name: SONET-MIB.sonetFarEndPathIntervalTable<br>Monitored classes:<br>• sonetequipment.Sts1Channel<br>• sonetequipment.Sts3Channel<br>• sonetequipment.Sts12Channel<br>• sonetequipment.Sts48Channel<br>• sonetequipment.Sts192Channel<br>• sonetequipment.Tu3Channel | | | |
| codingViolations | long | sonetFarEndPathIntervalCVs | The counter associated with the number of Far End Coding Violations reported via the far end block error count encountered by a SONET/SDH Path interface in a particular 15-minute interval in the past 24 hours. |
| erroredSeconds | long | sonetFarEndPathIntervalESs | The counter associated with the number of Far End Errored Seconds encountered by a SONET/SDH Path interface in a particular 15-minute interval in the past 24 hours. |
| intervalNumber | int | sonetFarEndPathIntervalNumber | A number between 1 and 96, which identifies the interval for which the set of statistics is available. The interval identified by 1 is the most recently completed 15 minute interval, and the interval identified by N is the interval immediately preceding the one identified by N-1. |
| severelyErroredSeconds | long | sonetFarEndPathIntervalSESs | The counter associated with the number of Far End Severely Errored Seconds encountered by a SONET/SDH Path interface in a particular 15-minute interval in the past 24 hours. |

**(3 of 9)**

| 5620 SAM counter name | Type | MIB counter name | Description |
|---|---|---|---|
| unavailableSeconds | long | sonetFarEndPathInterval UASs | The counter associated with the number of Far End Unavailable Seconds encountered by a SONET/SDH Path interface in a particular 15-minute interval in the past 24 hours. |
| **SonetFarEndVtCurrentStats**<br>MIB table name: SONET-MIB.sonetFarEndVTCurrentTable<br>Monitored class: sonetequipment.TributaryChannel | | | |
| codingViolations | long | sonetFarEndVTCurrentCV s | The counter associated with the number of Far End Coding Violations reported via the far end block error count encountered by a SONET/SDH VT interface in the current 15 minute interval. |
| erroredSeconds | long | sonetFarEndVTCurrentESs | The counter associated with the number of Far End Errored Seconds encountered by a SONET/SDH interface in the current 15 minute interval. |
| severelyErroredSeconds | long | sonetFarEndVTCurrentSE Ss | The counter associated with the number of Far End Severely Errored Seconds encountered by a SONET/SDH VT interface in the current 15 minute interval. |
| unavailableSeconds | long | sonetFarEndVTCurrentUA Ss | The counter associated with the number of Far End Unavailable Seconds encountered by a SONET/SDH VT interface in the current 15 minute interval. |
| **SonetFarEndVtIntervalStats**<br>MIB table name: SONET-MIB.sonetFarEndVTIntervalTable<br>Monitored class: sonetequipment.TributaryChannel | | | |
| codingViolations | long | sonetFarEndVTIntervalCV s | The counter associated with the number of Far End Coding Violations reported via the far end block error count encountered by a SONET/SDH VT interface in a particular 15-minute interval in the past 24 hours. |
| erroredSeconds | long | sonetFarEndVTIntervalES s | The counter associated with the number of Far End Errored Seconds encountered by a SONET/SDH VT interface in a particular 15-minute interval in the past 24 hours. |
| intervalNumber | int | sonetFarEndVTIntervalNu mber | A number between 1 and 96, which identifies the interval for which the set of statistics is available. The interval identified by 1 is the most recently completed 15 minute interval, and the interval identified by N is the interval immediately preceding the one identified by N-1. |
| severelyErroredSeconds | long | sonetFarEndVTIntervalSE Ss | The counter associated with the number of Far End Severely Errored Seconds encountered by a SONET/SDH VT interface in a particular 15-minute interval in the past 24 hours. |

**(4 of 9)**

| 5620 SAM counter name | Type | MIB counter name | Description |
|---|---|---|---|
| unavailableSeconds | long | sonetFarEndVTIntervalUASs | The counter associated with the number of Far End Unavailable Seconds encountered by a SONET/SDH VT interface in a particular 15-minute interval in the past 24 hours. |
| **SonetLineCurrentStats**<br>MIB table name: SONET-MIB.sonetLineCurrentTable<br>Monitored class: equipment.PhysicalPort | | | |
| codingViolations | long | sonetLineCurrentCVs | The counter associated with the number of Coding Violations encountered by a SONET/SDH Line in the current 15 minute interval. |
| currentStatus | long | sonetLineCurrentStatus | This variable indicates the status of the interface. The sonetLineCurrentStatus is a bit map represented as a sum, therefore, it can represent multiple defects simultaneously. The sonetLineNoDefect should be set if and only if no other flag is set. The various bit positions are: 1 sonetLineNoDefect 2 sonetLineAIS 4 sonetLineRDI. |
| erroredSeconds | long | sonetLineCurrentESs | The counter associated with the number of Errored Seconds encountered by a SONET/SDH Line in the current 15 minute interval. |
| severelyErroredSeconds | long | sonetLineCurrentSESs | The counter associated with the number of Severely Errored Seconds encountered by a SONET/SDH Line in the current 15 minute interval. |
| unavailableSeconds | long | sonetLineCurrentUASs | The counter associated with the number of Unavailable Seconds encountered by a SONET/SDH Line in the current 15 minute interval. |
| **SonetLineIntervalStats**<br>MIB table name: SONET-MIB.sonetLineIntervalTable<br>Monitored class: equipment.PhysicalPort | | | |
| codingViolations | long | sonetLineIntervalCVs | The counter associated with the number of Coding Violations encountered by a SONET/SDH Line in a particular 15-minute interval in the past 24 hours. |
| erroredSeconds | long | sonetLineIntervalESs | The counter associated with the number of Errored Seconds encountered by a SONET/SDH Line in a particular 15-minute interval in the past 24 hours. |
| intervalNumber | int | sonetLineIntervalNumber | A number between 1 and 96, which identifies the interval for which the set of statistics is available. The interval identified by 1 is the most recently completed 15 minute interval, and the interval identified by N is the interval immediately preceding the one identified by N-1. |

**(5 of 9)**

| 5620 SAM counter name | Type | MIB counter name | Description |
|---|---|---|---|
| severelyErroredSeconds | long | sonetLineIntervalSESs | The counter associated with the number of Severely Errored Seconds encountered by a SONET/SDH Line in a particular 15-minute interval in the past 24 hours. |
| unavailableSeconds | long | sonetLineIntervalUASs | The counter associated with the number of Unavailable Seconds encountered by a SONET/SDH Line in a particular 15-minute interval in the past 24 hours. |
| **SonetPathCurrentStats**<br>MIB table name: SONET-MIB.sonetPathCurrentTable<br>Monitored classes:<br>• sonetequipment.Sts1Channel<br>• sonetequipment.Sts3Channel<br>• sonetequipment.Sts12Channel<br>• sonetequipment.Sts48Channel<br>• sonetequipment.Sts192Channel<br>• sonetequipment.Tu3Channel | | | |
| codingViolations | long | sonetPathCurrentCVs | The counter associated with the number of Coding Violations encountered by a SONET/SDH Path in the current 15 minute interval. |
| currentStatus | long | sonetPathCurrentStatus | This variable indicates the status of the interface. The sonetPathCurrentStatus is a bit map represented as a sum, therefore, it can represent multiple defects simultaneously. The sonetPathNoDefect should be set if and only if no other flag is set. The various bit positions are: 1 sonetPathNoDefect 2 sonetPathSTSLOP 4 sonetPathSTSAIS 8 sonetPathSTSRDI 16 sonetPathUnequipped 32 sonetPathSignalLabelMismatch. |
| currentWidth | int | sonetPathCurrentWidth | A value that indicates the type of the SONET/SDH Path. For SONET, the assigned types are the STS-Nc SPEs, where N = 1, 3, 12, 24, 48, 192 and 768. STS-1 is equal to 51.84 Mbps. For SDH, the assigned types are the STM-Nc VCs, where N = 1, 4, 16, 64 and 256. |
| erroredSeconds | long | sonetPathCurrentESs | The counter associated with the number of Errored Seconds encountered by a SONET/SDH Path in the current 15 minute interval. |
| severelyErroredSeconds | long | sonetPathCurrentSESs | The counter associated with the number of Severely Errored Seconds encountered by a SONET/SDH Path in the current 15 minute interval. |
| unavailableSeconds | long | sonetPathCurrentUASs | The counter associated with the number of Unavailable Seconds encountered by a Path in the current 15 minute interval. |

**(6 of 9)**

| 5620 SAM counter name | Type | MIB counter name | Description |
|---|---|---|---|
| **SonetPathIntervalStats**<br>MIB table name: SONET-MIB.sonetPathIntervalTable<br>Monitored classes:<br>• sonetequipment.Sts1Channel<br>• sonetequipment.Sts3Channel<br>• sonetequipment.Sts12Channel<br>• sonetequipment.Sts48Channel<br>• sonetequipment.Sts192Channel<br>• sonetequipment.Tu3Channel | | | |
| codingViolations | long | sonetPathIntervalCVs | The counter associated with the number of Coding Violations encountered by a SONET/SDH Path in a particular 15-minute interval in the past 24 hours. |
| erroredSeconds | long | sonetPathIntervalESs | The counter associated with the number of Errored Seconds encountered by a SONET/SDH Path in a particular 15-minute interval in the past 24 hours. |
| intervalNumber | int | sonetPathIntervalNumber | A number between 1 and 96, which identifies the interval for which the set of statistics is available. The interval identified by 1 is the most recently completed 15 minute interval, and the interval identified by N is the interval immediately preceding the one identified by N-1. |
| severelyErroredSeconds | long | sonetPathIntervalSESs | The counter associated with the number of Severely Errored Seconds encountered by a SONET/SDH Path in a particular 15-minute interval in the past 24 hours. |
| unavailableSeconds | long | sonetPathIntervalUASs | The counter associated with the number of Unavailable Seconds encountered by a Path in a particular 15-minute interval in the past 24 hours. |
| **SonetSectionCurrentStats**<br>MIB table name: SONET-MIB.sonetSectionCurrentTable<br>Monitored class: equipment.PhysicalPort | | | |
| codingViolations | long | sonetSectionCurrentCVs | The counter associated with the number of Coding Violations encountered by a SONET/SDH Section in the current 15 minute interval. |
| currentStatus | long | sonetSectionCurrentStatus | This variable indicates the status of the interface. The sonetSectionCurrentStatus is a bit map represented as a sum, therefore, it can represent multiple defects simultaneously. The sonetSectionNoDefect should be set if and only if no other flag is set. The various bit positions are: 1 sonetSectionNoDefect 2 sonetSectionLOS 4 sonetSectionLOF. |
| erroredSeconds | long | sonetSectionCurrentESs | The counter associated with the number of Errored Seconds encountered by a SONET/SDH Section in the current 15 minute interval. |

**(7 of 9)**

| 5620 SAM counter name | Type | MIB counter name | Description |
|---|---|---|---|
| severelyErroredFramingSeconds | long | sonetSectionCurrentSEFSs | The counter associated with the number of Severely Errored Framing Seconds encountered by a SONET/SDH Section in the current 15 minute interval. |
| severelyErroredSeconds | long | sonetSectionCurrentSESs | The counter associated with the number of Severely Errored Seconds encountered by a SONET/SDH Section in the current 15 minute interval. |
| **SonetSectionIntervalStats**<br>MIB table name: SONET-MIB.sonetSectionIntervalTable<br>Monitored class: equipment.PhysicalPort | | | |
| codingViolations | long | sonetSectionIntervalCVs | The counter associated with the number of Coding Violations encountered by a SONET/SDH Section in a particular 15-minute interval in the past 24 hours. |
| erroredSeconds | long | sonetSectionIntervalESs | The counter associated with the number of Errored Seconds encountered by a SONET/SDH Section in a particular 15-minute interval in the past 24 hours. |
| intervalNumber | int | sonetSectionIntervalNumber | A number between 1 and 96, which identifies the interval for which the set of statistics is available. The interval identified by 1 is the most recently completed 15 minute interval, and the interval identified by N is the interval immediately preceding the one identified by N-1. |
| severelyErroredFramingSeconds | long | sonetSectionIntervalSEFSs | The counter associated with the number of Severely Errored Framing Seconds encountered by a SONET/SDH Section in a particular 15-minute interval in the past 24 hours. |
| severelyErroredSeconds | long | sonetSectionIntervalSESs | The counter associated with the number of Severely Errored Seconds encountered by a SONET/SDH Section in a particular 15-minute interval in the past 24 hours. |
| **SonetVtCurrentStats**<br>MIB table name: SONET-MIB.sonetVTCurrentTable<br>Monitored class: sonetequipment.TributaryChannel | | | |
| codingViolations | long | sonetVTCurrentCVs | The counter associated with the number of Coding Violations encountered by a SONET/SDH VT in the current 15 minute interval. |
| currentStatus | long | sonetVTCurrentStatus | This variable indicates the status of the interface. The sonetVTCurrentStatus is a bit map represented as a sum, therefore, it can represent multiple defects and failures simultaneously. The sonetVTNoDefect should be set if and only if no other flag is set. The various bit positions are: 1 sonetVTNoDefect 2 sonetVTLOP 4 sonetVTPathAIS 8 sonetVTPathRDI 16 sonetVTPathRFI 32 sonetVTUnequipped 64 sonetVTSignalLabelMismatch. |

**(8 of 9)**

| 5620 SAM counter name | Type | MIB counter name | Description |
|---|---|---|---|
| currentWidth | int | sonetVTCurrentWidth | A value that indicates the type of the SONET VT and SDH VC. Assigned widths are VT1.5/VC11, VT2/VC12, VT3, VT6/VC2, and VT6c. |
| erroredSeconds | long | sonetVTCurrentESs | The counter associated with the number of Errored Seconds encountered by a SONET/SDH VT in the current 15 minute interval. |
| severelyErroredSeconds | long | sonetVTCurrentSESs | The counter associated with the number of Severely Errored Seconds encountered by a SONET/SDH VT in the current 15 minute interval. |
| unavailableSeconds | long | sonetVTCurrentUASs | The counter associated with the number of Unavailable Seconds encountered by a VT in the current 15 minute interval. |
| **SonetVtIntervalStats**<br>MIB table name: SONET-MIB.sonetVTIntervalTable<br>Monitored class: sonetequipment.TributaryChannel | | | |
| codingViolations | long | sonetVTIntervalCVs | The counter associated with the number of Coding Violations encountered by a SONET/SDH VT in a particular 15-minute interval in the past 24 hours. |
| erroredSeconds | long | sonetVTIntervalESs | The counter associated with the number of Errored Seconds encountered by a SONET/SDH VT in a particular 15-minute interval in the past 24 hours. |
| intervalNumber | int | sonetVTIntervalNumber | A number between 1 and 96, which identifies the interval for which the set of statistics is available. The interval identified by 1 is the most recently completed 15 minute interval, and the interval identified by N is the interval immediately preceding the one identified by N-1. |
| severelyErroredSeconds | long | sonetVTIntervalSESs | The counter associated with the number of Severely Errored Seconds encountered by a SONET/SDH VT in a particular 15-minute interval in the past 24 hours. |
| unavailableSeconds | long | sonetVTIntervalUASs | The counter associated with the number of Unavailable Seconds encountered by a VT in a particular 15-minute interval in the past 24 hours. |

**(9 of 9)**

### Table A-47 srrp statistics

| 5620 SAM counter name | Type | MIB counter name | Description |
|---|---|---|---|
| **InstanceStats**<br>MIB table name: TIMETRA-MC-REDUNDANCY-MIB.tmnxSrrpStatsTable<br>Monitored class: srrp.Instance | | | |

**(1 of 3)**

| 5620 SAM counter name | Type | MIB counter name | Description |
|---|---|---|---|
| advertiseIntervalDiscards | long | tmnxSrrpStatsAdvIntDiscards | The value for tmnxSrrpStatsAdvIntDiscards indicates the total number of SRRP advertisement packets discarded because the advertisement interval in the received packet was different than the one configured for the local virtual router. |
| advertiseIntervalErrors | long | tmnxSrrpStatsAdvIntErrors | The value for tmnxSrrpStatsAdvIntErrors indicates the total number of SRRP advertisement packets received for which the advertisement interval is different than the one configured for the local virtual router. |
| advertiseRcvd | long | tmnxSrrpStatsAdvRcvd | The value for tmnxSrrpStatsAdvRcvd indicates the total number of SRRP advertisements received by this virtual router. |
| advertiseSent | long | tmnxSrrpStatsAdvSent | The value for tmnxSrrpStatsAdvSent indicates the total number of SRRP advertisements sent by this virtual router. |
| becomeBackupRouting | long | tmnxSrrpStatsBecomeBackupRouting | The value for tmnxSrrpStatsBecomeBackupRouting indicates the total number of times that the virtual router's state has transitioned to backup routing state. |
| becomeBackupShunt | long | tmnxSrrpStatsBecomeBackupShunt | The value for tmnxSrrpStatsBecomeBackupShunt indicates the total number of times that the virtual router's state has transitioned to backup shunt. |
| becomeMaster | long | tmnxSrrpStatsBecomeMaster | The value for tmnxSrrpStatsBecomeMaster indicates the total number of times that the virtual router's state has transitioned to master. |
| becomeNonMaster | long | tmnxSrrpStatsBecomeNonMaster | The value for tmnxSrrpStatsBecomeNonMaster indicates the total number times that the virtual router's state has transitioned from master to a non-master state. |
| masterChanges | long | tmnxSrrpStatsMasterChanges | The value for tmnxSrrpStatsMasterChanges indicates the total number of times the virtual router has seen the master virtual router change. |
| preemptedEvents | long | tmnxSrrpStatsPreemptedEvents | The value for tmnxSrrpStatsPreemptedEvents indicates the total number of times the virtual router has been preempted by another non-owner master with higher priority. |
| preemptEvents | long | tmnxSrrpStatsPreemptEvents | The value for tmnxSrrpStatsPreemptEvents indicates the total number of times the virtual router has preempted another non-owner master with lower priority. |

**(2 of 3)**

| 5620 SAM counter name | Type | MIB counter name | Description |
|---|---|---|---|
| priorityZeroPktsRcvd | long | tmnxSrrpStatsPriZeroPkts Sent | The value for tmnxSrrpStatsPriZeroPktsSent indicates the total number of SRRP packets sent by the virtual router with a priority of '0'. |
| priorityZeroPktsSent | long | tmnxSrrpStatsPriZeroPkts Rcvd | The value for tmnxSrrpStatsPriZeroPktsRcvd indicates the total number of SRRP packets received by the virtual router with a priority of '0'. |

**(3 of 3)**

### Table A-48 subscrauth statistics

| 5620 SAM counter name | Type | MIB counter name | Description |
|---|---|---|---|
| **PolicyStats**<br>MIB table name: TIMETRA-SUBSCRIBER-MGMT-MIB.tmnxSubAuthPlcyStatsTable<br>Monitored class: subscrauth.Policy | | | |
| rejectedAuthentications | long | tmnxSubAuthPlcyReject | The value of tmnxSubAuthPlcyReject indicates how many subscriber messages (e.g. DHCP, PPPoE, ...) were rejected by the authentication. Note that not all requests are therefore forwarded to radius. If several requests are sent in a short timeframe, only the first one is sent to radius. |
| rejectedRadiusFallbackAuthentica tions | long | tmnxSubAuthPlcyFallback Reject | The value of tmnxSubAuthPlcyReject indicates how many subscriber messages (e.g. DHCP, PPPoE, ...) were rejected by the fallback mechanism. |
| successfulAuthentications | long | tmnxSubAuthPlcySuccess | The value of tmnxSubAuthPlcySuccess indicates how many subscriber messages (e.g. DHCP, PPPoE, ...) were authenticated successfully. Note that not all requests are therefore forwarded to radius. If several requests are sent in a short timeframe, only the first one is sent to radius. |
| successfulRadiusFallbackAuthentic ations | long | tmnxSubAuthPlcyFallback Success | The value of tmnxSubAuthPlcySuccess indicates how many subscriber messages (e.g. DHCP, PPPoE, ...) were authenticated successfully by the fallback mechanism. |
| **RadiusEntryStats**<br>MIB table name: TIMETRA-SUBSCRIBER-MGMT-MIB.tmnxSubAuthPlcyRadStatsTable<br>Monitored class: subscrauth.RadiusEntry | | | |
| failedAuthenticationRequests | long | tmnxSubAuthPlcyRadSen dFail | The value of tmnxSubAuthPlcyRadSendFail indicates how many authentication requests failed because the packet could not be sent out. |
| md5VerificationFailedRequests | long | tmnxSubAuthPlcyRadMd5 Fail | The value of tmnxSubAuthPlcyRadMd5Fail indicates how many times the MD5 verification failed on a msg from this radius server. |

**(1 of 2)**

| 5620 SAM counter name | Type | MIB counter name | Description |
|---|---|---|---|
| pendingAuthenticationRequest | long | tmnxSubAuthPlcyRadPending | The value of tmnxSubAuthPlcyRadPending indicates how many authentication requests are currently pending. |
| rejectedAuthenticationRequests | long | tmnxSubAuthPlcyRadReject | The value of tmnxSubAuthPlcyRadReject indicates how many authentication requests were rejected by this radius server. |
| successfulAuthenticationRequests | long | tmnxSubAuthPlcyRadSuccess | The value of tmnxSubAuthPlcyRadSuccess indicates how many authentication requests were accepted by this radius server. |
| timedOutAuthenticationRequests | long | tmnxSubAuthPlcyRadTimeout | The value of tmnxSubAuthPlcyRadTimeout indicates how many times this radius did not reply to an authentication request within the timeout. |

**(2 of 2)**

**Table A-49 svq statistics**

| 5620 SAM counter name | Type | MIB counter name | Description |
|---|---|---|---|
| **CustMultiSvcSiteEgrSchedPlcyPortStats**<br>MIB table name: TIMETRA-SERV-MIB.custMultiSvcSiteEgrSchedPlcyPortStatsTable<br>Monitored class: svq.AggregationScheduler | | | |
| forwardedOctets | UINT128 | custEgrSchedPlcyPortStatsFwdOct | The value of custEgrSchedPlcyPortStatsFwdOct indicates the number of forwarded octets, as determined by the customer multi service site egress scheduler policy. |
| forwardedPackets | UINT128 | custEgrSchedPlcyPortStatsFwdPkt | The value of custEgrSchedPlcyPortStatsFwdPkt indicates the number of forwarded packets, as determined by the customer multi service site egress scheduler policy. |
| portID | long | custEgrSchedPlcyPortStatsPort | The value of custEgrSchedPlcyPortStatsPort is used as an index of the egress QoS scheduler of this customer multi service site. When an MSS assignment is an aps/ccag/lag in 'link' mode, each member-port of the aps/ccag/lag has its own scheduler. This object refers to the TmnxPortID of these member-ports. |
| **CustMultiSvcSiteEgrSchedPlcyStats**<br>MIB table name: TIMETRA-SERV-MIB.custMultiSvcSiteEgrSchedPlcyStatsTable<br>Monitored class: svq.AggregationScheduler | | | |
| forwardedOctets | UINT128 | custEgrSchedPlcyStatsFwdOct | The value of the object custEgrSchedPlcyStatsFwdOct indicates the number of forwarded octets, as determined by the customer multi service site egress scheduler policy. |

**(1 of 2)**

| 5620 SAM counter name | Type | MIB counter name | Description |
|---|---|---|---|
| forwardedPackets | UINT128 | custEgrSchedPlcyStatsFwdPkt | The value of the object custEgrSchedPlcyStatsFwdPkt indicates the number of forwarded packets, as determined by the customer multi service site egress scheduler policy. |
| **CustMultiSvcSiteIngSchedPlcyPortStats**<br>MIB table name: TIMETRA-SERV-MIB.custMultiSvcSiteIngSchedPlcyPortStatsTable<br>Monitored class: svq.AggregationScheduler | | | |
| forwardedOctets | UINT128 | custIngSchedPlcyPortStatsFwdOct | The value of custIngSchedPlcyPortStatsFwdOct indicates the number of forwarded octets, as determined by the customer multi service site ingress scheduler policy. |
| forwardedPackets | UINT128 | custIngSchedPlcyPortStatsFwdPkt | The value of custIngSchedPlcyPortStatsFwdPkt indicates the number of forwarded packets, as determined by the customer multi service site ingress scheduler policy. |
| portID | long | custIngSchedPlcyPortStatsPort | The value of custIngSchedPlcyPortStatsPort is used as an index of the ingress QoS scheduler of this customer multi service site. When an MSS assignment is an aps/ccag/lag in 'link' mode, each member-port of the aps/ccag/lag has its own scheduler. This object refers to the TmnxPortID of these member-ports. |
| **CustMultiSvcSiteIngSchedPlcyStats**<br>MIB table name: TIMETRA-SERV-MIB.custMultiSvcSiteIngSchedPlcyStatsTable<br>Monitored class: svq.AggregationScheduler | | | |
| forwardedOctets | UINT128 | custIngSchedPlcyStatsFwdOct | The value of the object custIngSchedPlcyStatsFwdOct indicates the number of forwarded octets, as determined by the customer multi service site ingress scheduler policy. |
| forwardedPackets | UINT128 | custIngSchedPlcyStatsFwdPkt | The value of the object custIngSchedPlcyStatsFwdPkt indicates the number of forwarded packets, as determined by the customer multi service site ingress scheduler policy. |

**(2 of 2)**

### Table A-50 svt statistics

| 5620 SAM counter name | Type | MIB counter name | Description |
|---|---|---|---|
| **BsxSpokeSdpBindingCustRecAppGrpStats**<br>MIB table name: TIMETRA-BSX-NG-MIB.tmnxBsxStatAaSubTable<br>Monitored class: svt.SpokeSdpBinding | | | |

**(1 of 19)**

| 5620 SAM counter name | Type | MIB counter name | Description |
|---|---|---|---|
| activeFlowsFromSub | long | tmnxBsxStatAaSubActFlwsFmSb | The value of tmnxBsxStatAaSubActFlwsFmSb indicates the number of allowed flows in the subscriber to network direction that are active. |
| activeFlowsToSub | long | tmnxBsxStatAaSubActFlwsToSb | The value of tmnxBsxStatAaSubActFlwsToSb indicates the number of allowed flows in the network to subscriber direction that are active. |
| appGrpName | String | tmnxBsxStatAaName | The value of tmnxBsxStatAaName specifies either the ISA-AA protocol, application or app-group name for which statistics are requested. The tmnxBsxStatAaType is used to determine the statistics type. |
| durationFlowsLong | UINT128 | tmnxBsxStatAaSubHCLngDurFlws | The value of tmnxBsxStatAaSubHCLngDurFlws indicates the total number of flows with a duration greater than 180 seconds, that have completed. This object is a 64-bit version of tmnxBsxStatAaSubLngDurFlws. |
| durationFlowsMedium | UINT128 | tmnxBsxStatAaSubHCMedDurFlws | The value of tmnxBsxStatAaSubHCMedDurFlws indicates the total number of flows with a duration less than or equal to 180 seconds, but greater than 30 seconds, that have completed. This object is a 64-bit version of tmnxBsxStatAaSubMedDurFlws. |
| durationFlowsShort | UINT128 | tmnxBsxStatAaSubHCShrtDurFlws | The value of tmnxBsxStatAaSubHCShrtDurFlws indicates the total number of flows with a duration less than or equal to 30 seconds, that have completed. This object is a 64-bit version of tmnxBsxStatAaSubShrtDurFlws. |
| flowsAdmitFromSub | UINT128 | tmnxBsxStatAaSubHCFlwsAdmFmSb | The value of tmnxBsxStatAaSubHCFlwsAdmFmSb indicates the total number of flows permitted for the subscriber to network direction. This object is a 64-bit version of tmnxBsxStatAaSubFlwsAdmFmSb. |
| flowsAdmitToSub | UINT128 | tmnxBsxStatAaSubHCFlwsAdmToSb | The value of tmnxBsxStatAaSubHCFlwsAdmToSb indicates the total number of flows permitted for the network to subscriber direction. This object is a 64-bit version of tmnxBsxStatAaSubFlwsAdmToSb. |
| flowsDenyFromSub | UINT128 | tmnxBsxStatAaSubHCFlwsDnyFmSb | The value of tmnxBsxStatAaSubHCFlwsDnyFmSb indicates the total number of flows that dropped subsequent packets in the subscriber to network direction. This object is a 64-bit version of tmnxBsxStatAaSubFlwsDnyFmSb. |

**(2 of 19)**

| 5620 SAM counter name | Type | MIB counter name | Description |
|---|---|---|---|
| flowsDenyToSub | UINT128 | tmnxBsxStatAaSubHCFlwsDnyToSb | The value of tmnxBsxStatAaSubHCFlwsDnyToSb indicates the total number of flows that dropped subsequent packets in the network to subscriber direction. This object is the 64-bit version of tmnxBsxStatAaSubFlwsDnyToSb. |
| octsAdmitFromSub | UINT128 | tmnxBsxStatAaSubHCOctsAdmFmSb | The value of tmnxBsxStatAaSubHCOctsAdmFmSb indicates the total number of bytes permitted for the subscriber to network direction. This object is a 64-bit version of tmnxBsxStatAaSubOctsAdmFmSb. |
| octsAdmitToSub | UINT128 | tmnxBsxStatAaSubHCOctsAdmToSb | The value of tmnxBsxStatAaSubHCOctsAdmToSb indicates the total number of bytes permitted for the network to subscriber direction. This object is a 64-bit version of tmnxBsxStatAaSubOctsAdmToSb. |
| octsDenyFromSub | UINT128 | tmnxBsxStatAaSubHCOctsDnyFmSb | The value of tmnxBsxStatAaSubHCOctsDnyFmSb indicates the total number of bytes dropped for the subscriber to network direction. This object is a 64-bit version of tmnxBsxStatAaSubOctsDnyFmSb. |
| octsDenyToSub | UINT128 | tmnxBsxStatAaSubHCOctsDnyToSb | The value of tmnxBsxStatAaSubHCOctsDnyToSb indicates the total number of bytes dropped for the network to subscriber direction. This object is a 64-bit version of tmnxBsxStatAaSubOctsDnyToSb. |
| pktsAdmitFromSub | UINT128 | tmnxBsxStatAaSubHCPktsAdmFmSb | The value of tmnxBsxStatAaSubHCPktsAdmFmSb indicates the total number of packets permitted for the subscriber to network direction. This object is a 64-bit version of tmnxBsxStatAaSubPktsAdmFmSb. |
| pktsAdmitToSub | UINT128 | tmnxBsxStatAaSubHCPktsAdmToSb | The value of tmnxBsxStatAaSubHCPktsAdmToSb indicates the total number of packets permitted for the network to subscriber direction. This object is a 64-bit version of tmnxBsxStatAaSubPktsAdmToSb. |
| pktsDenyFromSub | UINT128 | tmnxBsxStatAaSubHCPktsDnyFmSb | The value of tmnxBsxStatAaSubHCPktsDnyFmSb indicates the total number of packets dropped for the subscriber to network direction. This object is a 64-bit version of tmnxBsxStatAaSubPktsDnyFmSb. |
| pktsDenyToSub | UINT128 | tmnxBsxStatAaSubHCPktsDnyToSb | The value of tmnxBsxStatAaSubHCPktsDnyToSb indicates the total number of packets dropped for the network to subscriber direction. This object is a 64-bit version of tmnxBsxStatAaSubPktsDnyToSb. |

**(3 of 19)**

| 5620 SAM counter name | Type | MIB counter name | Description |
|---|---|---|---|
| statsInterval | int | tmnxBsxAaSubStatsInterval | The tmnxBsxAaSubStatsInterval specifies the interval for the retrieval of application assurance subscriber statistics. |
| termFlowDuration | UINT128 | tmnxBsxStatAaSubHCTermFlwDur | The value of tmnxBsxStatAaSubHCTermFlwDur indicates the sum of all flow durations from first packet seen to last packet seen for flows that have terminated. This object is a 64-bit version of tmnxBsxStatAaSubTermFlwDur. |
| termFlows | UINT128 | tmnxBsxStatAaSubHCTermFlws | The value of tmnxBsxStatAaSubHCTermFlws indicates the total number of allowed flows that have terminated. This object is a 64-bit version of tmnxBsxStatAaSubTermFlws. |
| **BsxSpokeSdpBindingCustRecAppStats**<br>MIB table name: TIMETRA-BSX-NG-MIB.tmnxBsxStatAaSubTable<br>Monitored class: svt.SpokeSdpBinding | | | |
| activeFlowsFromSub | long | tmnxBsxStatAaSubActFlwsFmSb | The value of tmnxBsxStatAaSubActFlwsFmSb indicates the number of allowed flows in the subscriber to network direction that are active. |
| activeFlowsToSub | long | tmnxBsxStatAaSubActFlwsToSb | The value of tmnxBsxStatAaSubActFlwsToSb indicates the number of allowed flows in the network to subscriber direction that are active. |
| durationFlowsLong | UINT128 | tmnxBsxStatAaSubHCLngDurFlws | The value of tmnxBsxStatAaSubHCLngDurFlws indicates the total number of flows with a duration greater than 180 seconds, that have completed. This object is a 64-bit version of tmnxBsxStatAaSubLngDurFlws. |
| durationFlowsMedium | UINT128 | tmnxBsxStatAaSubHCMedDurFlws | The value of tmnxBsxStatAaSubHCMedDurFlws indicates the total number of flows with a duration less than or equal to 180 seconds, but greater than 30 seconds, that have completed. This object is a 64-bit version of tmnxBsxStatAaSubMedDurFlws. |
| durationFlowsShort | UINT128 | tmnxBsxStatAaSubHCShrtDurFlws | The value of tmnxBsxStatAaSubHCShrtDurFlws indicates the total number of flows with a duration less than or equal to 30 seconds, that have completed. This object is a 64-bit version of tmnxBsxStatAaSubShrtDurFlws. |
| flowsAdmitFromSub | UINT128 | tmnxBsxStatAaSubHCFlwsAdmFmSb | The value of tmnxBsxStatAaSubHCFlwsAdmFmSb indicates the total number of flows permitted for the subscriber to network direction. This object is a 64-bit version of tmnxBsxStatAaSubFlwsAdmFmSb. |

**(4 of 19)**

| 5620 SAM counter name | Type | MIB counter name | Description |
|---|---|---|---|
| flowsAdmitToSub | UINT128 | tmnxBsxStatAaSubHCFlwsAdmToSb | The value of tmnxBsxStatAaSubHCFlwsAdmToSb indicates the total number of flows permitted for the network to subscriber direction. This object is a 64-bit version of tmnxBsxStatAaSubFlwsAdmToSb. |
| flowsDenyFromSub | UINT128 | tmnxBsxStatAaSubHCFlwsDnyFmSb | The value of tmnxBsxStatAaSubHCFlwsDnyFmSb indicates the total number of flows that dropped subsequent packets in the subscriber to network direction. This object is a 64-bit version of tmnxBsxStatAaSubFlwsDnyFmSb. |
| flowsDenyToSub | UINT128 | tmnxBsxStatAaSubHCFlwsDnyToSb | The value of tmnxBsxStatAaSubHCFlwsDnyToSb indicates the total number of flows that dropped subsequent packets in the network to subscriber direction. This object is the 64-bit version of tmnxBsxStatAaSubFlwsDnyToSb. |
| octsAdmitFromSub | UINT128 | tmnxBsxStatAaSubHCOctsAdmFmSb | The value of tmnxBsxStatAaSubHCOctsAdmFmSb indicates the total number of bytes permitted for the subscriber to network direction. This object is a 64-bit version of tmnxBsxStatAaSubOctsAdmFmSb. |
| octsAdmitToSub | UINT128 | tmnxBsxStatAaSubHCOctsAdmToSb | The value of tmnxBsxStatAaSubHCOctsAdmToSb indicates the total number of bytes permitted for the network to subscriber direction. This object is a 64-bit version of tmnxBsxStatAaSubOctsAdmToSb. |
| octsDenyFromSub | UINT128 | tmnxBsxStatAaSubHCOctsDnyFmSb | The value of tmnxBsxStatAaSubHCOctsDnyFmSb indicates the total number of bytes dropped for the subscriber to network direction. This object is a 64-bit version of tmnxBsxStatAaSubOctsDnyFmSb. |
| octsDenyToSub | UINT128 | tmnxBsxStatAaSubHCOctsDnyToSb | The value of tmnxBsxStatAaSubHCOctsDnyToSb indicates the total number of bytes dropped for the network to subscriber direction. This object is a 64-bit version of tmnxBsxStatAaSubOctsDnyToSb. |
| pktsAdmitFromSub | UINT128 | tmnxBsxStatAaSubHCPktsAdmFmSb | The value of tmnxBsxStatAaSubHCPktsAdmFmSb indicates the total number of packets permitted for the subscriber to network direction. This object is a 64-bit version of tmnxBsxStatAaSubPktsAdmFmSb. |
| pktsAdmitToSub | UINT128 | tmnxBsxStatAaSubHCPktsAdmToSb | The value of tmnxBsxStatAaSubHCPktsAdmToSb indicates the total number of packets permitted for the network to subscriber direction. This object is a 64-bit version of tmnxBsxStatAaSubPktsAdmToSb. |

**(5 of 19)**

| 5620 SAM counter name | Type | MIB counter name | Description |
|---|---|---|---|
| pktsDenyFromSub | UINT128 | tmnxBsxStatAaSubHCPktsDnyFmSb | The value of tmnxBsxStatAaSubHCPktsDnyFmSb indicates the total number of packets dropped for the subscriber to network direction. This object is a 64-bit version of tmnxBsxStatAaSubPktsDnyFmSb. |
| pktsDenyToSub | UINT128 | tmnxBsxStatAaSubHCPktsDnyToSb | The value of tmnxBsxStatAaSubHCPktsDnyToSb indicates the total number of packets dropped for the network to subscriber direction. This object is a 64-bit version of tmnxBsxStatAaSubPktsDnyToSb. |
| statsInterval | int | tmnxBsxAaSubStatsInterval | The tmnxBsxAaSubStatsInterval specifies the interval for the retrieval of application assurance subscriber statistics. |
| termFlowDuration | UINT128 | tmnxBsxStatAaSubHCTermFlwDur | The value of tmnxBsxStatAaSubHCTermFlwDur indicates the sum of all flow durations from first packet seen to last packet seen for flows that have terminated. This object is a 64-bit version of tmnxBsxStatAaSubTermFlwDur. |
| termFlows | UINT128 | tmnxBsxStatAaSubHCTermFlws | The value of tmnxBsxStatAaSubHCTermFlws indicates the total number of allowed flows that have terminated. This object is a 64-bit version of tmnxBsxStatAaSubTermFlws. |
| **BsxSpokeSdpBindingCustRecProtStats**<br>MIB table name: TIMETRA-BSX-NG-MIB.tmnxBsxStatAaSubTable<br>Monitored class: svt.SpokeSdpBinding | | | |
| activeFlowsFromSub | long | tmnxBsxStatAaSubActFlwsFmSb | The value of tmnxBsxStatAaSubActFlwsFmSb indicates the number of allowed flows in the subscriber to network direction that are active. |
| activeFlowsToSub | long | tmnxBsxStatAaSubActFlwsToSb | The value of tmnxBsxStatAaSubActFlwsToSb indicates the number of allowed flows in the network to subscriber direction that are active. |
| durationFlowsLong | UINT128 | tmnxBsxStatAaSubHCLngDurFlws | The value of tmnxBsxStatAaSubHCLngDurFlws indicates the total number of flows with a duration greater than 180 seconds, that have completed. This object is a 64-bit version of tmnxBsxStatAaSubLngDurFlws. |
| durationFlowsMedium | UINT128 | tmnxBsxStatAaSubHCMedDurFlws | The value of tmnxBsxStatAaSubHCMedDurFlws indicates the total number of flows with a duration less than or equal to 180 seconds, but greater than 30 seconds, that have completed. This object is a 64-bit version of tmnxBsxStatAaSubMedDurFlws. |

**(6 of 19)**

| 5620 SAM counter name | Type | MIB counter name | Description |
|---|---|---|---|
| durationFlowsShort | UINT128 | tmnxBsxStatAaSubHCShrtDurFlws | The value of tmnxBsxStatAaSubHCShrtDurFlws indicates the total number of flows with a duration less than or equal to 30 seconds, that have completed. This object is a 64-bit version of tmnxBsxStatAaSubShrtDurFlws. |
| flowsAdmitFromSub | UINT128 | tmnxBsxStatAaSubHCFlwsAdmFmSb | The value of tmnxBsxStatAaSubHCFlwsAdmFmSb indicates the total number of flows permitted for the subscriber to network direction. This object is a 64-bit version of tmnxBsxStatAaSubFlwsAdmFmSb. |
| flowsAdmitToSub | UINT128 | tmnxBsxStatAaSubHCFlwsAdmToSb | The value of tmnxBsxStatAaSubHCFlwsAdmToSb indicates the total number of flows permitted for the network to subscriber direction. This object is a 64-bit version of tmnxBsxStatAaSubFlwsAdmToSb. |
| flowsDenyFromSub | UINT128 | tmnxBsxStatAaSubHCFlwsDnyFmSb | The value of tmnxBsxStatAaSubHCFlwsDnyFmSb indicates the total number of flows that dropped subsequent packets in the subscriber to network direction. This object is a 64-bit version of tmnxBsxStatAaSubFlwsDnyFmSb. |
| flowsDenyToSub | UINT128 | tmnxBsxStatAaSubHCFlwsDnyToSb | The value of tmnxBsxStatAaSubHCFlwsDnyToSb indicates the total number of flows that dropped subsequent packets in the network to subscriber direction. This object is the 64-bit version of tmnxBsxStatAaSubFlwsDnyToSb. |
| octsAdmitFromSub | UINT128 | tmnxBsxStatAaSubHCOctsAdmFmSb | The value of tmnxBsxStatAaSubHCOctsAdmFmSb indicates the total number of bytes permitted for the subscriber to network direction. This object is a 64-bit version of tmnxBsxStatAaSubOctsAdmFmSb. |
| octsAdmitToSub | UINT128 | tmnxBsxStatAaSubHCOctsAdmToSb | The value of tmnxBsxStatAaSubHCOctsAdmToSb indicates the total number of bytes permitted for the network to subscriber direction. This object is a 64-bit version of tmnxBsxStatAaSubOctsAdmToSb. |
| octsDenyFromSub | UINT128 | tmnxBsxStatAaSubHCOctsDnyFmSb | The value of tmnxBsxStatAaSubHCOctsDnyFmSb indicates the total number of bytes dropped for the subscriber to network direction. This object is a 64-bit version of tmnxBsxStatAaSubOctsDnyFmSb. |
| octsDenyToSub | UINT128 | tmnxBsxStatAaSubHCOctsDnyToSb | The value of tmnxBsxStatAaSubHCOctsDnyToSb indicates the total number of bytes dropped for the network to subscriber direction. This object is a 64-bit version of tmnxBsxStatAaSubOctsDnyToSb. |

**(7 of 19)**

| 5620 SAM counter name | Type | MIB counter name | Description |
|---|---|---|---|
| pktsAdmitFromSub | UINT128 | tmnxBsxStatAaSubHCPktsAdmFmSb | The value of tmnxBsxStatAaSubHCPktsAdmFmSb indicates the total number of packets permitted for the subscriber to network direction. This object is a 64-bit version of tmnxBsxStatAaSubPktsAdmFmSb. |
| pktsAdmitToSub | UINT128 | tmnxBsxStatAaSubHCPktsAdmToSb | The value of tmnxBsxStatAaSubHCPktsAdmToSb indicates the total number of packets permitted for the network to subscriber direction. This object is a 64-bit version of tmnxBsxStatAaSubPktsAdmToSb. |
| pktsDenyFromSub | UINT128 | tmnxBsxStatAaSubHCPktsDnyFmSb | The value of tmnxBsxStatAaSubHCPktsDnyFmSb indicates the total number of packets dropped for the subscriber to network direction. This object is a 64-bit version of tmnxBsxStatAaSubPktsDnyFmSb. |
| pktsDenyToSub | UINT128 | tmnxBsxStatAaSubHCPktsDnyToSb | The value of tmnxBsxStatAaSubHCPktsDnyToSb indicates the total number of packets dropped for the network to subscriber direction. This object is a 64-bit version of tmnxBsxStatAaSubPktsDnyToSb. |
| statsInterval | int | tmnxBsxAaSubStatsInterval | The tmnxBsxAaSubStatsInterval specifies the interval for the retrieval of application assurance subscriber statistics. |
| termFlowDuration | UINT128 | tmnxBsxStatAaSubHCTermFlwDur | The value of tmnxBsxStatAaSubHCTermFlwDur indicates the sum of all flow durations from first packet seen to last packet seen for flows that have terminated. This object is a 64-bit version of tmnxBsxStatAaSubTermFlwDur. |
| termFlows | UINT128 | tmnxBsxStatAaSubHCTermFlws | The value of tmnxBsxStatAaSubHCTermFlws indicates the total number of allowed flows that have terminated. This object is a 64-bit version of tmnxBsxStatAaSubTermFlws. |
| **BsxSpokeSdpBindingStudyAppStats**<br>MIB table name: TIMETRA-BSX-NG-MIB.tmnxBsxStatAaSubSdyTable<br>Monitored class: svt.SpokeSdpBinding | | | |
| activeFlowsFromSub | long | tmnxBsxStatAaSubSdyActFlwsFmSb | The value of tmnxBsxStatAaSubSdyActFlwsFmSb indicates the number of allowed flows in the subscriber to network direction that are active. |
| activeFlowsToSub | long | tmnxBsxStatAaSubSdyActFlwsToSb | The value of tmnxBsxStatAaSubSdyActFlwsToSb indicates the number of allowed flows in the network to subscriber direction that are active. |

**(8 of 19)**

| 5620 SAM counter name | Type | MIB counter name | Description |
|---|---|---|---|
| durationFlowsLong | UINT128 | tmnxBsxStatAaSubSdyHCLngDurFlws | The value of tmnxBsxStatAaSubSdyHCLngDurFlws indicates the total number of flows with a duration greater than 180 seconds, that have completed. This object is a 64-bit version of tmnxBsxStatAaSubSdyLngDurFlws. |
| durationFlowsMedium | UINT128 | tmnxBsxStatAaSubSdyHCMedDurFlws | The value of tmnxBsxStatAaSubSdyHCMedDurFlws indicates the total number of flows with a duration less than or equal to 180 seconds, but greater than 30 seconds, that have completed. This object is a 64-bit version of tmnxBsxStatAaSubSdyMedDurFlws. |
| durationFlowsShort | UINT128 | tmnxBsxStatAaSubSdyHCShrtDurFlws | The value of tmnxBsxStatAaSubSdyHCShrtDurFlws indicates the total number of flows with a duration less than or equal to 30 seconds, that have completed. This object is a 64-bit version of tmnxBsxStatAaSubSdyShrtDurFlws. |
| flowsAdmitFromSub | UINT128 | tmnxBsxStatAaSubSdyHCFlwsAdmFmSb | The value of tmnxBsxStatAaSubSdyHCFlwsAdmFmSb indicates the total number of flows permitted for the subscriber to network direction. This object is a 64-bit version of tmnxBsxStatAaSubSdyFlwsAdmFmSb. |
| flowsAdmitToSub | UINT128 | tmnxBsxStatAaSubSdyHCFlwsAdmToSb | The value of tmnxBsxStatAaSubSdyHCFlwsAdmToSb indicates the total number of flows permitted for the network to subscriber direction. This object is a 64-bit version of tmnxBsxStatAaSubSdyFlwsAdmToSb. |
| flowsDenyFromSub | UINT128 | tmnxBsxStatAaSubSdyHCFlwsDnyFmSb | The value of tmnxBsxStatAaSubSdyHCFlwsDnyFmSb indicates the total number of flows that dropped subsequent packets in the subscriber to network direction. This object is a 64-bit version of tmnxBsxStatAaSubSdyFlwsDnyFmSb. |
| flowsDenyToSub | UINT128 | tmnxBsxStatAaSubSdyHCFlwsDnyToSb | The value of tmnxBsxStatAaSubSdyHCFlwsDnyToSb indicates the total number of flows that dropped subsequent packets in the network to subscriber direction. This object is a 64-bit version of tmnxBsxStatAaSubSdyFlwsDnyToSb. |
| octsAdmitFromSub | UINT128 | tmnxBsxStatAaSubSdyHCOctsAdmFmSb | The value of tmnxBsxStatAaSubSdyHCOctsAdmFmSb indicates the total number of bytes permitted for the subscriber to network direction. This object is a 64-bit version of tmnxBsxStatAaSubSdyOctsAdmFmSb. |
| octsAdmitFromSub | UINT128 | tmnxBsxStatAaSubSdyOctsAdmFmSb | The value of tmnxBsxStatAaSubSdyOctsAdmFmSb indicates the total number of bytes permitted for the subscriber to network direction. |

**(9 of 19)**

| 5620 SAM counter name | Type | MIB counter name | Description |
|---|---|---|---|
| octsAdmitToSub | UINT128 | tmnxBsxStatAaSubSdyHC OctsAdmToSb | The value of tmnxBsxStatAaSubSdyHCOctsAdmToSb indicates the total number of bytes permitted for the network to subscriber direction. This object is a 64-bit version of tmnxBsxStatAaSubSdyOctsAdmToSb. |
| octsDenyFromSub | UINT128 | tmnxBsxStatAaSubSdyHC OctsDnyFmSb | The value of tmnxBsxStatAaSubSdyHCOctsDnyFmSb indicates the total number of bytes dropped for the subscriber to network direction. This object is a 64-bit version of tmnxBsxStatAaSubSdyOctsDnyFmSb. |
| octsDenyToSub | UINT128 | tmnxBsxStatAaSubSdyHC OctsDnyToSb | The value of tmnxBsxStatAaSubSdyHCOctsDnyToSb indicates the total number of bytes dropped for the network to subscriber direction. This object is a 64-bit version of tmnxBsxStatAaSubSdyOctsDnyToSb. |
| pktsAdmitFromSub | UINT128 | tmnxBsxStatAaSubSdyHC PktsAdmFmSb | The value of tmnxBsxStatAaSubSdyHCPktsAdmFmSb indicates the total number of packets permitted for the subscriber to network direction. This object is a 64-bit version of tmnxBsxStatAaSubSdyPktsAdmFmSb. |
| pktsAdmitToSub | UINT128 | tmnxBsxStatAaSubSdyHC PktsAdmToSb | The value of tmnxBsxStatAaSubSdyHCPktsAdmToSb indicates the total number of packets permitted for the network to subscriber direction. This object is a 64-bit version of tmnxBsxStatAaSubSdyPktsAdmToSb. |
| pktsDenyFromSub | UINT128 | tmnxBsxStatAaSubSdyHC PktsDnyFmSb | The value of tmnxBsxStatAaSubSdyHCPktsDnyFmSb indicates the total number of packets dropped for the subscriber to network direction. This object is a 64-bit version of tmnxBsxStatAaSubSdyPktsDnyFmSb. |
| pktsDenyToSub | UINT128 | tmnxBsxStatAaSubSdyHC PktsDnyToSb | The value of tmnxBsxStatAaSubSdyHCPktsDnyToSb indicates the total number of packets dropped for the network to subscriber direction. This object is a 64-bit version of tmnxBsxStatAaSubSdyPktsDnyToSb. |
| termFlowDuration | UINT128 | tmnxBsxStatAaSubSdyHC TermFlwDur | The value of tmnxBsxStatAaSubSdyHCTermFlwDur indicates the sum of all flow durations from first packet seen to last packet seen for flows that have terminated. This object is a 64-bit version of tmnxBsxStatAaSubSdyTermFlwDur. |
| termFlows | UINT128 | tmnxBsxStatAaSubSdyHC TermFlws | The value of tmnxBsxStatAaSubSdyHCTermFlws indicates the total number of allowed flows that have terminated. This object is a 64-bit version of tmnxBsxStatAaSubSdyTermFlws. |

**(10 of 19)**

| 5620 SAM counter name | Type | MIB counter name | Description |
|---|---|---|---|
| **BsxSpokeSdpBindingStudyProtStats**<br>MIB table name: TIMETRA-BSX-NG-MIB.tmnxBsxStatAaSubSdyTable<br>Monitored class: svt.SpokeSdpBinding | | | |
| activeFlowsFromSub | long | tmnxBsxStatAaSubSdyActFlwsFmSb | The value of tmnxBsxStatAaSubSdyActFlwsFmSb indicates the number of allowed flows in the subscriber to network direction that are active. |
| activeFlowsToSub | long | tmnxBsxStatAaSubSdyActFlwsToSb | The value of tmnxBsxStatAaSubSdyActFlwsToSb indicates the number of allowed flows in the network to subscriber direction that are active. |
| durationFlowsLong | UINT128 | tmnxBsxStatAaSubSdyHCLngDurFlws | The value of tmnxBsxStatAaSubSdyHCLngDurFlws indicates the total number of flows with a duration greater than 180 seconds, that have completed. This object is a 64-bit version of tmnxBsxStatAaSubSdyLngDurFlws. |
| durationFlowsMedium | UINT128 | tmnxBsxStatAaSubSdyHCMedDurFlws | The value of tmnxBsxStatAaSubSdyHCMedDurFlws indicates the total number of flows with a duration less than or equal to 180 seconds, but greater than 30 seconds, that have completed. This object is a 64-bit version of tmnxBsxStatAaSubSdyMedDurFlws. |
| durationFlowsShort | UINT128 | tmnxBsxStatAaSubSdyHCShrtDurFlws | The value of tmnxBsxStatAaSubSdyHCShrtDurFlws indicates the total number of flows with a duration less than or equal to 30 seconds, that have completed. This object is a 64-bit version of tmnxBsxStatAaSubSdyShrtDurFlws. |
| flowsAdmitFromSub | UINT128 | tmnxBsxStatAaSubSdyHCFlwsAdmFmSb | The value of tmnxBsxStatAaSubSdyHCFlwsAdmFmSb indicates the total number of flows permitted for the subscriber to network direction. This object is a 64-bit version of tmnxBsxStatAaSubSdyFlwsAdmFmSb. |
| flowsAdmitToSub | UINT128 | tmnxBsxStatAaSubSdyHCFlwsAdmToSb | The value of tmnxBsxStatAaSubSdyHCFlwsAdmToSb indicates the total number of flows permitted for the network to subscriber direction. This object is a 64-bit version of tmnxBsxStatAaSubSdyFlwsAdmToSb. |
| flowsDenyFromSub | UINT128 | tmnxBsxStatAaSubSdyHCFlwsDnyFmSb | The value of tmnxBsxStatAaSubSdyHCFlwsDnyFmSb indicates the total number of flows that dropped subsequent packets in the subscriber to network direction. This object is a 64-bit version of tmnxBsxStatAaSubSdyFlwsDnyFmSb. |

**(11 of 19)**

| 5620 SAM counter name | Type | MIB counter name | Description |
|---|---|---|---|
| flowsDenyToSub | UINT128 | tmnxBsxStatAaSubSdyHCFlwsDnyToSb | The value of tmnxBsxStatAaSubSdyHCFlwsDnyToSb indicates the total number of flows that dropped subsequent packets in the network to subscriber direction. This object is a 64-bit version of tmnxBsxStatAaSubSdyFlwsDnyToSb. |
| octsAdmitFromSub | UINT128 | tmnxBsxStatAaSubSdyHCOctsAdmFmSb | The value of tmnxBsxStatAaSubSdyHCOctsAdmFmSb indicates the total number of bytes permitted for the subscriber to network direction. This object is a 64-bit version of tmnxBsxStatAaSubSdyOctsAdmFmSb. |
| octsAdmitFromSub | UINT128 | tmnxBsxStatAaSubSdyOctsAdmFmSb | The value of tmnxBsxStatAaSubSdyOctsAdmFmSb indicates the total number of bytes permitted for the subscriber to network direction. |
| octsAdmitToSub | UINT128 | tmnxBsxStatAaSubSdyHCOctsAdmToSb | The value of tmnxBsxStatAaSubSdyHCOctsAdmToSb indicates the total number of bytes permitted for the network to subscriber direction. This object is a 64-bit version of tmnxBsxStatAaSubSdyOctsAdmToSb. |
| octsDenyFromSub | UINT128 | tmnxBsxStatAaSubSdyHCOctsDnyFmSb | The value of tmnxBsxStatAaSubSdyHCOctsDnyFmSb indicates the total number of bytes dropped for the subscriber to network direction. This object is a 64-bit version of tmnxBsxStatAaSubSdyOctsDnyFmSb. |
| octsDenyToSub | UINT128 | tmnxBsxStatAaSubSdyHCOctsDnyToSb | The value of tmnxBsxStatAaSubSdyHCOctsDnyToSb indicates the total number of bytes dropped for the network to subscriber direction. This object is a 64-bit version of tmnxBsxStatAaSubSdyOctsDnyToSb. |
| pktsAdmitFromSub | UINT128 | tmnxBsxStatAaSubSdyHCPktsAdmFmSb | The value of tmnxBsxStatAaSubSdyHCPktsAdmFmSb indicates the total number of packets permitted for the subscriber to network direction. This object is a 64-bit version of tmnxBsxStatAaSubSdyPktsAdmFmSb. |
| pktsAdmitToSub | UINT128 | tmnxBsxStatAaSubSdyHCPktsAdmToSb | The value of tmnxBsxStatAaSubSdyHCPktsAdmToSb indicates the total number of packets permitted for the network to subscriber direction. This object is a 64-bit version of tmnxBsxStatAaSubSdyPktsAdmToSb. |
| pktsDenyFromSub | UINT128 | tmnxBsxStatAaSubSdyHCPktsDnyFmSb | The value of tmnxBsxStatAaSubSdyHCPktsDnyFmSb indicates the total number of packets dropped for the subscriber to network direction. This object is a 64-bit version of tmnxBsxStatAaSubSdyPktsDnyFmSb. |

**(12 of 19)**

| 5620 SAM counter name | Type | MIB counter name | Description |
|---|---|---|---|
| pktsDenyToSub | UINT128 | tmnxBsxStatAaSubSdyHCPktsDnyToSb | The value of tmnxBsxStatAaSubSdyHCPktsDnyToSb indicates the total number of packets dropped for the network to subscriber direction. This object is a 64-bit version of tmnxBsxStatAaSubSdyPktsDnyToSb. |
| protName | String | tmnxBsxStatAaName | The value of tmnxBsxStatAaName specifies either the ISA-AA protocol, application or app-group name for which statistics are requested. The tmnxBsxStatAaType is used to determine the statistics type. |
| termFlowDuration | UINT128 | tmnxBsxStatAaSubSdyHCTermFlwDur | The value of tmnxBsxStatAaSubSdyHCTermFlwDur indicates the sum of all flow durations from first packet seen to last packet seen for flows that have terminated. This object is a 64-bit version of tmnxBsxStatAaSubSdyTermFlwDur. |
| termFlows | UINT128 | tmnxBsxStatAaSubSdyHCTermFlws | The value of tmnxBsxStatAaSubSdyHCTermFlws indicates the total number of allowed flows that have terminated. This object is a 64-bit version of tmnxBsxStatAaSubSdyTermFlws. |
| **GRETunnelStats**<br>MIB table name: TIMETRA-SAP-MIB.tmnxGreTunnelStatsTable<br>Monitored class: svt.GRETunnel | | | |
| bytesRx | UINT128 | tmnxGreTunnelBytesRx | The value of tmnxGreTunnelBytesRx indicates the number of bytes this GRE Tunnel has received. |
| bytesRxHi | long | tmnxGreTunnelBytesRxHi | The value of tmnxGreTunnelBytesRxHi indicates higher 32 bits of the value of tmnxGreTunnelBytesRx object. |
| bytesRxLo | long | tmnxGreTunnelBytesRxLo | The value of tmnxGreTunnelBytesRxLo indicates lower 32 bits of the value of tmnxGreTunnelBytesRx object. |
| bytesTx | UINT128 | tmnxGreTunnelBytesTx | The value of tmnxGreTunnelBytesTx indicates the number of bytes this GRE Tunnel has sent. |
| bytesTxHi | long | tmnxGreTunnelBytesTxHi | The value of tmnxGreTunnelBytesTxHi indicates higher 32 bits of the value of tmnxGreTunnelBytesTx object. |
| bytesTxLo | long | tmnxGreTunnelBytesTxLo | The value of tmnxGreTunnelBytesTxLo indicates lower 32 bits of the value of tmnxGreTunnelBytesTx object. |
| invalidChksumRx | UINT128 | tmnxGreTunnelInvalidChksumRx | The value of tmnxGreTunnelInvalidChksumRx indicates the number of packets this GRE Tunnel received with invalid checksum and were dropped. |
| invalidChksumRxHi | long | tmnxGreTunnelInvalidChksumRxHi | The value of tmnxGreTunnelInvalidChksumRxHi indicates higher 32 bits of the value of tmnxGreTunnelInvalidChksumRx object. |

**(13 of 19)**

| 5620 SAM counter name | Type | MIB counter name | Description |
|---|---|---|---|
| invalidChksumRxLo | long | tmnxGreTunnelInvalidChksumRxLo | The value of tmnxGreTunnelInvalidChksumRxLo indicates lower 32 bits of the value of tmnxGreTunnelInvalidChksumRx object. |
| keyIgnoredRx | UINT128 | tmnxGreTunnelKeyIgnoredRx | The value of tmnxGreTunnelKeyIgnoredRx indicates the number of packets this GRE Tunnel received and processed ignoring key field. |
| keyIgnoredRxHi | long | tmnxGreTunnelKeyIgnoredRxHi | The value of tmnxGreTunnelKeyIgnoredRxHi indicates higher 32 bits of the value of tmnxGreTunnelKeyIgnoredRx object. |
| keyIgnoredRxLo | long | tmnxGreTunnelKeyIgnoredRxLo | The value of tmnxGreTunnelKeyIgnoredRxLo indicates lower 32 bits of the value of tmnxGreTunnelKeyIgnoredRx object. |
| loopsRx | UINT128 | tmnxGreTunnelLoopsRx | The value of tmnxGreTunnelLoopsRx indicates the number of packets this GRE Tunnel received with payload with destination address which could result in a loop and were dropped. |
| loopsRxHi | long | tmnxGreTunnelLoopsRxHi | The value of tmnxGreTunnelLoopsRxHi indicates higher 32 bits of the value of tmnxGreTunnelLoopsRx object. |
| loopsRxLo | long | tmnxGreTunnelLoopsRxLo | The value of tmnxGreTunnelLoopsRxLo indicates lower 32 bits of the value of tmnxGreTunnelLoopsRx object. |
| pktsRx | UINT128 | tmnxGreTunnelPktsRx | The value of tmnxGreTunnelPktsRx indicates the number of packets this GRE Tunnel has received. |
| pktsRxHi | long | tmnxGreTunnelPktsRxHi | The value of tmnxGreTunnelPktsRxHi indicates higher 32 bits of the value of tmnxGreTunnelPktsRx object. |
| pktsRxLo | long | tmnxGreTunnelPktsRxLo | The value of tmnxGreTunnelPktsRxLo indicates lower 32 bits of the value of tmnxGreTunnelPktsRx object. |
| pktsTx | UINT128 | tmnxGreTunnelPktsTx | The value of tmnxGreTunnelPktsTx indicates the number of packets this GRE Tunnel has sent. |
| pktsTxHi | long | tmnxGreTunnelPktsTxHi | The value of tmnxGreTunnelPktsTxHi indicates higher 32 bits of the value of tmnxGreTunnelPktsTx object. |
| pktsTxLo | long | tmnxGreTunnelPktsTxLo | The value of tmnxGreTunnelPktsTxLo indicates lower 32 bits of the value of tmnxGreTunnelPktsTx object. |
| rxErrors | long | tmnxGreTunnelRxErrors | The value of tmnxGreTunnelRxErrors indicates the number of packet receive errors. |
| seqIgnoredRx | UINT128 | tmnxGreTunnelSeqIgnoredRx | The value of tmnxGreTunnelSeqIgnoredRx indicates the number of packets this GRE Tunnel and processed ignoring sequence field. |

**(14 of 19)**

| 5620 SAM counter name | Type | MIB counter name | Description |
|---|---|---|---|
| seqIgnoredRxHi | long | tmnxGreTunnelSeqIgnoredRxHi | The value of tmnxGreTunnelSeqIgnoredRxHi indicates higher 32 bits of the value of tmnxGreTunnelSeqIgnoredRx object. |
| seqIgnoredRxLo | long | tmnxGreTunnelSeqIgnoredRxLo | The value of tmnxGreTunnelSeqIgnoredRxLo indicates lower 32 bits of the value of tmnxGreTunnelSeqIgnoredRx object. |
| tooBigTx | UINT128 | tmnxGreTunnelTooBigTx | The value of tmnxGreTunnelTooBigTx indicates the number of packets this GRE Tunnel received which were too big to transmit. |
| tooBigTxHi | long | tmnxGreTunnelTooBigTxHi | The value of tmnxGreTunnelTooBigTxHi indicates higher 32 bits of the value of tmnxGreTunnelTooBigTx object. |
| tooBigTxLo | long | tmnxGreTunnelTooBigTxLo | The value of tmnxGreTunnelTooBigTxLo indicates lower 32 bits of the value of tmnxGreTunnelTooBigTx object. |
| txErrors | long | tmnxGreTunnelTxErrors | The value of tmnxGreTunnelTxErrors indicates the number of packet transmit errors. |
| versUnsupRx | UINT128 | tmnxGreTunnelVersUnsupRx | The value of tmnxGreTunnelVersUnsupRx indicates the number of packets this GRE Tunnel received with unsupported GRE version and were dropped. |
| versUnsupRxHi | long | tmnxGreTunnelVersUnsupRxHi | The value of tmnxGreTunnelVersUnsupRxHi indicates higher 32 bits of the value of tmnxGreTunnelVersUnsupRx object. |
| versUnsupRxLo | long | tmnxGreTunnelVersUnsupRxLo | The value of tmnxGreTunnelVersUnsupRxLo indicates lower 32 bits of the value of tmnxGreTunnelVersUnsupRx object. |
| **MirrorSdpBindingStats**<br>MIB table name: TIMETRA-SDP-MIB.sdpBindBaseStatsTable<br>Monitored class: svt.MirrorSdpBinding | | | |
| egressForwardedOctets | UINT128 | sdpBindBaseStatsEgressForwardedOctets | . |
| egressForwardedPackets | UINT128 | sdpBindBaseStatsEgressForwardedPackets | . |
| ingressDroppedOctets | UINT128 | sdpBindBaseStatsIngDropOctets | . |
| ingressDroppedPackets | UINT128 | sdpBindBaseStatsIngressDroppedPackets | . |
| ingressForwardedOctets | UINT128 | sdpBindBaseStatsIngFwdOctets | . |
| ingressForwardedPackets | UINT128 | sdpBindBaseStatsIngressForwardedPackets | . |

**(15 of 19)**

| 5620 SAM counter name | Type | MIB counter name | Description |
|---|---|---|---|
| **SdpBindingBaseStats**<br>MIB table name: TIMETRA-SDP-MIB.sdpBindBaseStatsTable<br>Monitored classes:<br>• svt.SpokeSdpBinding<br>• svt.MeshSdpBinding | | | |
| egressForwardedOctets | UINT128 | sdpBindBaseStatsEgressForwardedOctets | . |
| egressForwardedPackets | UINT128 | sdpBindBaseStatsEgressForwardedPackets | . |
| ingressDroppedOctets | UINT128 | sdpBindBaseStatsIngDropOctets | . |
| ingressDroppedPackets | UINT128 | sdpBindBaseStatsIngressDroppedPackets | . |
| ingressForwardedOctets | UINT128 | sdpBindBaseStatsIngFwdOctets | . |
| ingressForwardedPackets | UINT128 | sdpBindBaseStatsIngressForwardedPackets | . |
| **SdpBindingIgmpSnpgErrorStats**<br>MIB table name: ALCATEL-IGMP-SNOOPING-MIB.sdpBindIgmpSnpgStatsTable<br>Monitored classes:<br>• svt.SpokeSdpBinding<br>• svt.MeshSdpBinding | | | |
| sdpBndIgmpSnpgImportPolicyDrops | long | sdpBndIgmpSnpgImportPolicyDrops | The value of the object sdpBndIgmpSnpgImportPolicyDrops indicates the number of times an IGMP Group or Source is dropped because of applying an import policy on this SDP Bind. |
| sdpBndIgmpSnpgMaxNumGroupsDrops | long | sdpBndIgmpSnpgMaxNumGroupsDrops | The value of the object sdpBndIgmpSnpgMaxNumGroupsDrops indicates the number of times an IGMP Group is dropped because of exceeding the configured maximum number of groups on this SDP Bind. |
| sdpBndIgmpSnpgMaxNumSourcesDrops | long | sdpBndIgmpSnpgMaxNumSourcesDrops | The value of the object sdpBndIgmpSnpgMaxNumSourcesDrops indicates the number of times an IGMP Source is dropped because of exceeding the configured maximum number of sources per group on this SDP Bind. |
| sdpBndIgmpSnpgMcacPolicyDrops | long | sdpBndIgmpSnpgMcacPolicyDrops | The value of the object sdpBndIgmpSnpgMcacPolicyDrops indicates the number of times an IGMP Group is dropped because of applying a multicast CAC policy on this SDP Bind. |
| sdpBndIgmpSnpgRxBadEncodedPkts | long | sdpBndIgmpSnpgRxBadEncodedPkts | The value of the object sdpBndIgmpSnpgRxBadEncodedPkts indicates the number of IGMP packets dropped on this SDP Bind because of a bad encoding. |

**(16 of 19)**

| 5620 SAM counter name | Type | MIB counter name | Description |
|---|---|---|---|
| sdpBndIgmpSnpgRxBadIgmpChksmPkts | long | sdpBndIgmpSnpgRxBadIgmpChksmPkts | The value of the object sdpBndIgmpSnpgRxBadIgmpChksmPkts indicates the number of dropped IGMP packets on this SDP Bind because of a bad IGMP header checksum. |
| sdpBndIgmpSnpgRxBadIpChksmPkts | long | sdpBndIgmpSnpgRxBadIpChksmPkts | The value of the object sdpBndIgmpSnpgRxBadIpChksmPkts indicates the number of dropped IGMP packets on this SDP Bind because of a bad IPv4 header checksum. |
| sdpBndIgmpSnpgRxBadLenPkts | long | sdpBndIgmpSnpgRxBadLenPkts | The value of the object sdpBndIgmpSnpgRxBadLenPkts indicates the number of IGMP packets dropped on this SDP Bind because of a bad length. |
| sdpBndIgmpSnpgRxNoRtrAlertPkts | long | sdpBndIgmpSnpgRxNoRtrAlertPkts | The value of the object sdpBndIgmpSnpgRxNoRtrAlertPkts indicates the number of IGMP packets dropped on this SDP Bind because the Router Alert Option in the IP packet is not set. |
| sdpBndIgmpSnpgRxWrongVersionPkts | long | sdpBndIgmpSnpgRxWrongVersionPkts | The value of the object sdpBndIgmpSnpgRxWrongVersionPkts indicates the total number of IGMP packets with a wrong version received on this SDP Bind. |
| sdpBndIgmpSnpgRxZeroSrcAdrPkts | long | sdpBndIgmpSnpgRxZeroSrcAdrPkts | The value of the object sdpBndIgmpSnpgRxZeroSrcAdrPkts indicates the number of IGMP packets dropped on this SDP Bind because they contain a zero source IPv4 address. |
| sdpBndIgmpSnpgSendQueryCfgDrops | long | sdpBndIgmpSnpgSendQueryCfgDrops | The value of the object sdpBndIgmpSnpgSendQueryCfgDrops indicates the number of times an IGMP Query is dropped because the object sdpBndIgmpSnpgCfgSendQueries for this SDP Bind is set to 'enabled(1)'. |
| **SdpBindingIgmpSnpgStats**<br>MIB table name: ALCATEL-IGMP-SNOOPING-MIB.sdpBindIgmpSnpgStatsTable<br>Monitored classes:<br>• svt.SpokeSdpBinding<br>• svt.MeshSdpBinding | | | |
| sdpBndIgmpSnpgFwdGenQueries | long | sdpBndIgmpSnpgFwdGenQueries | The value of the object sdpBndIgmpSnpgFwdGenQueries indicates the number of IGMP General Queries forwarded on this SDP Bind. |
| sdpBndIgmpSnpgFwdGrpSpecQueries | long | sdpBndIgmpSnpgFwdGrpSpecQueries | The value of the object sdpBndIgmpSnpgFwdGrpSpecQueries indicates the number of IGMP Group-Specific Queries forwarded on this SDP Bind. |
| sdpBndIgmpSnpgFwdSrcSpecQueries | long | sdpBndIgmpSnpgFwdSrcSpecQueries | The value of the object sdpBndIgmpSnpgFwdSrcSpecQueries indicates the number of IGMP Group-And-Source-Specific Queries forwarded on this SDP Bind. |

**(17 of 19)**

| 5620 SAM counter name | Type | MIB counter name | Description |
|---|---|---|---|
| sdpBndIgmpSnpgFwdUnknownType | long | sdpBndIgmpSnpgFwdUnknownType | The value of the object sdpBndIgmpSnpgFwdUnknownType indicates the number of IGMP unknown type packets forwarded on this SDP Bind. |
| sdpBndIgmpSnpgFwdV1Reports | long | sdpBndIgmpSnpgFwdV1Reports | The value of the object sdpBndIgmpSnpgFwdV1Reports indicates the number of IGMPv1 Reports forwarded on this SDP Bind. |
| sdpBndIgmpSnpgFwdV2Leaves | long | sdpBndIgmpSnpgFwdV2Leaves | The value of the object sdpBndIgmpSnpgFwdV2Leaves indicates the number of IGMPv2 Leaves forwarded on this SDP Bind. |
| sdpBndIgmpSnpgFwdV2Reports | long | sdpBndIgmpSnpgFwdV2Reports | The value of the object sdpBndIgmpSnpgFwdV2Reports indicates the number of IGMPv2 Reports forwarded on this SDP Bind. |
| sdpBndIgmpSnpgFwdV3Reports | long | sdpBndIgmpSnpgFwdV3Reports | The value of the object sdpBndIgmpSnpgFwdV3Reports indicates the number of IGMPv3 Reports forwarded on this SDP Bind. |
| sdpBndIgmpSnpgRxGenQueries | long | sdpBndIgmpSnpgRxGenQueries | The value of the object sdpBndIgmpSnpgRxGenQueries indicates the number of IGMP General Queries received on this SDP Bind. |
| sdpBndIgmpSnpgRxGrpSpecQueries | long | sdpBndIgmpSnpgRxGrpSpecQueries | The value of the object sdpBndIgmpSnpgRxGrpSpecQueries indicates the number of IGMP Group-Specific Queries received on this SDP Bind. |
| sdpBndIgmpSnpgRxSrcSpecQueries | long | sdpBndIgmpSnpgRxSrcSpecQueries | The value of the object sdpBndIgmpSnpgRxSrcSpecQueries indicates the number of IGMP Group-And-Source-Specific Queries received on this SDP Bind. |
| sdpBndIgmpSnpgRxUnknownType | long | sdpBndIgmpSnpgRxUnknownType | The value of the object sdpBndIgmpSnpgRxUnknownType indicates the number of IGMP unknown type packets received on this SDP Bind. |
| sdpBndIgmpSnpgRxV1Reports | long | sdpBndIgmpSnpgRxV1Reports | The value of the object sdpBndIgmpSnpgRxV1Reports indicates the number of IGMPv1 Reports received on this SDP Bind. |
| sdpBndIgmpSnpgRxV2Leaves | long | sdpBndIgmpSnpgRxV2Leaves | The value of the object sdpBndIgmpSnpgRxV2Leaves indicates the number of IGMPv2 Leaves received on this SDP Bind. |
| sdpBndIgmpSnpgRxV2Reports | long | sdpBndIgmpSnpgRxV2Reports | The value of the object sdpBndIgmpSnpgRxV2Reports indicates the number of IGMPv2 Reports received on this SDP Bind. |
| sdpBndIgmpSnpgRxV3Reports | long | sdpBndIgmpSnpgRxV3Reports | The value of the object sdpBndIgmpSnpgRxV3Reports indicates the number of IGMPv3 Reports received on this SDP Bind. |

**(18 of 19)**

| 5620 SAM counter name | Type | MIB counter name | Description |
|---|---|---|---|
| sdpBndIgmpSnpgTxGenQueries | long | sdpBndIgmpSnpgTxGenQueries | The value of the object sdpBndIgmpSnpgTxGenQueries indicates the number of IGMP General Queries transmitted on this SDP Bind. |
| sdpBndIgmpSnpgTxGrpSpecQueries | long | sdpBndIgmpSnpgTxGrpSpecQueries | The value of the object sdpBndIgmpSnpgTxGrpSpecQueries indicates the number of IGMP Group-Specific Queries transmitted on this SDP Bind. |
| sdpBndIgmpSnpgTxSrcSpecQueries | long | sdpBndIgmpSnpgTxSrcSpecQueries | The value of the object sdpBndIgmpSnpgTxSrcSpecQueries indicates the number of IGMP Group-And-Source-Specific Queries transmitted on this SDP Bind. |
| sdpBndIgmpSnpgTxV1Reports | long | sdpBndIgmpSnpgTxV1Reports | The value of the object sdpBndIgmpSnpgTxV1Reports indicates the number of IGMPv1 Reports transmitted on this SDP Bind. |
| sdpBndIgmpSnpgTxV2Leaves | long | sdpBndIgmpSnpgTxV2Leaves | The value of the object sdpBndIgmpSnpgTxV2Leaves indicates the number of IGMPv2 Leaves transmitted on this SDP Bind. |
| sdpBndIgmpSnpgTxV2Reports | long | sdpBndIgmpSnpgTxV2Reports | The value of the object sdpBndIgmpSnpgTxV2Reports indicates the number of IGMPv2 Reports transmitted on this SDP Bind. |
| sdpBndIgmpSnpgTxV3Reports | long | sdpBndIgmpSnpgTxV3Reports | The value of the object sdpBndIgmpSnpgTxV3Reports indicates the number of IGMPv3 Reports transmitted on this SDP Bind. |
| **TunnelKeepAliveStats**<br>MIB table name: TIMETRA-SDP-MIB.sdpInfoTable<br>Monitored class: svt.Tunnel | | | |
| lateHelloResponses | long | sdpKeepAliveNumLateHelloResponseMessages | The number of SDP Echo Response messages received after the corresponding Request timeout timer expired. |
| receivedHelloMessages | long | sdpKeepAliveNumHelloResponseMessages | The number of SDP Echo Response messages received since the keep-alive was administratively enabled or the counter was cleared. |
| transmittedHelloMessages | long | sdpKeepAliveNumHelloRequestMessages | The number of SDP Echo Request messages transmitted since the keep-alive was administratively enabled or the counter was cleared. |

**(19 of 19)**

**Table A-51 tdmequipment statistics**

| 5620 SAM counter name | Type | MIB counter name | Description |
|---|---|---|---|
| **DS1CurrentStats**<br>MIB table name: DS1-MIB.dsx1CurrentTable<br>Monitored class: tdmequipment.DS1E1Channel | | | |
| burstyErroredSeconds | long | dsx1CurrentBESs | The number of Bursty Errored Seconds. |
| controlledSlipSeconds | long | dsx1CurrentCSSs | The number of Controlled Slip Seconds. |
| degradedMinutes | long | dsx1CurrentDMs | The number of Degraded Minutes. |
| erroredSeconds | long | dsx1CurrentESs | The number of Errored Seconds. |
| lineCodingViolations | long | dsx1CurrentLCVs | The number of Line Code Violations (LCVs). |
| lineErroredSeconds | long | dsx1CurrentLESs | The number of Line Errored Seconds. |
| pBitCodingViolations | long | dsx1CurrentPCVs | The number of Path Coding Violations. |
| severelyErroredFramingSeconds | long | dsx1CurrentSEFSs | The number of Severely Errored Framing Seconds. |
| severelyErroredSeconds | long | dsx1CurrentSESs | The number of Severely Errored Seconds. |
| unavailableSeconds | long | dsx1CurrentUASs | The number of Unavailable Seconds. |
| **DS1FarEndCurrentStats**<br>MIB table name: DS1-MIB.dsx1FarEndCurrentTable<br>Monitored class: tdmequipment.DS1E1Channel | | | |
| burstyErroredSeconds | long | dsx1FarEndCurrentBESs | The number of Far End Bursty Errored Seconds. |
| controlledSlipSeconds | long | dsx1FarEndCurrentCSSs | The number of Far End Controlled Slip Seconds. |
| degradedMinutes | long | dsx1FarEndCurrentDMs | The number of Far End Degraded Minutes. |
| erroredSeconds | long | dsx1FarEndCurrentESs | The number of Far End Errored Seconds. |
| invalidIntervals | int | dsx1FarEndInvalidIntervals | The number of intervals in the range from 0 to dsx1FarEndValidIntervals for which no data is available. This object will typically be zero except in cases where the data for some intervals are not available (e.g., in proxy situations). |
| lineErroredSeconds | long | dsx1FarEndCurrentLESs | The number of Far End Line Errored Seconds. |
| pathCodingViolations | long | dsx1FarEndCurrentPCVs | The number of Far End Path Coding Violations. |
| severelyErroredFramingSeconds | long | dsx1FarEndCurrentSEFSs | The number of Far End Severely Errored Framing Seconds. |
| severelyErroredSeconds | long | dsx1FarEndCurrentSESs | The number of Far End Severely Errored Seconds. |
| timeElapsed | int | dsx1FarEndTimeElapsed | The number of seconds that have elapsed since the beginning of the far end current error-measurement period. If, for some reason, such as an adjustment in the system's time-of-day clock, the current interval exceeds the maximum value, the agent will return the maximum value. |

**(1 of 8)**

| 5620 SAM counter name | Type | MIB counter name | Description |
|---|---|---|---|
| unavailableSeconds | long | dsx1FarEndCurrentUASs | The number of Unavailable Seconds. |
| validIntervals | int | dsx1FarEndValidIntervals | The number of previous far end intervals for which data was collected. The value will be 96 unless the interface was brought online within the last 24 hours, in which case the value will be the number of complete 15 minute far end intervals since the interface has been online. In the case where the agent is a proxy, it is possible that some intervals are unavailable. In this case, this interval is the maximum interval number for which data is available. |
| **DS1FarEndIntervalStats**<br>MIB table name: DS1-MIB.dsx1FarEndIntervalTable<br>Monitored class: tdmequipment.DS1E1Channel | | | |
| burstyErroredSeconds | long | dsx1FarEndIntervalBESs | The number of Far End Bursty Errored Seconds. |
| controlledSlipSeconds | long | dsx1FarEndIntervalCSSs | The number of Far End Controlled Slip Seconds. |
| degradedMinutes | long | dsx1FarEndIntervalDMs | The number of Far End Degraded Minutes. |
| erroredSeconds | long | dsx1FarEndIntervalESs | The number of Far End Errored Seconds. |
| intervalNumber | int | dsx1FarEndIntervalNumber | A number between 1 and 96, where 1 is the most recently completed 15 minute interval and 96 is the 15 minutes interval completed 23 hours and 45 minutes prior to interval 1. |
| lineErroredSeconds | long | dsx1FarEndIntervalLESs | The number of Far End Line Errored Seconds. |
| pathCodingViolations | long | dsx1FarEndIntervalPCVs | The number of Far End Path Coding Violations. |
| severelyErroredFramingSeconds | long | dsx1FarEndIntervalSEFSs | The number of Far End Severely Errored Framing Seconds. |
| severelyErroredSeconds | long | dsx1FarEndIntervalSESs | The number of Far End Severely Errored Seconds. |
| unavailableSeconds | long | dsx1FarEndIntervalUASs | The number of Unavailable Seconds. |
| **DS1FarEndTotalStats**<br>MIB table name: DS1-MIB.dsx1FarEndTotalTable<br>Monitored class: tdmequipment.DS1E1Channel | | | |
| burstyErroredSeconds | long | dsx1FarEndTotalBESs | The number of Bursty Errored Seconds (BESs) encountered by a DS1 interface in the previous 24 hour interval. Invalid 15 minute intervals count as 0. |
| controlledSlipSeconds | long | dsx1FarEndTotalCSSs | The number of Far End Controlled Slip Seconds encountered by a DS1 interface in the previous 24 hour interval. Invalid 15 minute intervals count as 0. |
| degradedMinutes | long | dsx1FarEndTotalDMs | The number of Degraded Minutes (DMs) encountered by a DS1 interface in the previous 24 hour interval. Invalid 15 minute intervals count as 0. |

**(2 of 8)**

| 5620 SAM counter name | Type | MIB counter name | Description |
|---|---|---|---|
| erroredSeconds | long | dsx1FarEndTotalESs | The number of Far End Errored Seconds encountered by a DS1 interface in the previous 24 hour interval. Invalid 15 minute intervals count as 0. |
| lineErroredSeconds | long | dsx1FarEndTotalLESs | The number of Far End Line Errored Seconds encountered by a DS1 interface in the previous 24 hour interval. Invalid 15 minute intervals count as 0. |
| pathCodingViolations | long | dsx1FarEndTotalPCVs | The number of Far End Path Coding Violations reported via the far end block error count encountered by a DS1 interface in the previous 24 hour interval. Invalid 15 minute intervals count as 0. |
| severelyErroredFramingSeconds | long | dsx1FarEndTotalSEFSs | The number of Far End Severely Errored Framing Seconds encountered by a DS1 interface in the previous 24 hour interval. Invalid 15 minute intervals count as 0. |
| severelyErroredSeconds | long | dsx1FarEndTotalSESs | The number of Far End Severely Errored Seconds encountered by a DS1 interface in the previous 24 hour interval. Invalid 15 minute intervals count as 0. |
| unavailableSeconds | long | dsx1FarEndTotalUASs | The number of Unavailable Seconds encountered by a DS1 interface in the previous 24 hour interval. Invalid 15 minute intervals count as 0. |
| **DS1IntervalStats**<br>MIB table name: DS1-MIB.dsx1IntervalTable<br>Monitored class: tdmequipment.DS1E1Channel | | | |
| burstyErroredSeconds | long | dsx1IntervalBESs | The number of Bursty Errored Seconds. |
| controlledSlipSeconds | long | dsx1IntervalCSSs | The number of Controlled Slip Seconds. |
| degradedMinutes | long | dsx1IntervalDMs | The number of Degraded Minutes. |
| erroredSeconds | long | dsx1IntervalESs | The number of Errored Seconds. |
| intervalNumber | int | dsx1IntervalNumber | A number between 1 and 96, where 1 is the most recently completed 15 minute interval and 96 is the 15 minutes interval completed 23 hours and 45 minutes prior to interval 1. |
| lineCodingViolations | long | dsx1IntervalLCVs | The number of Line Code Violations. |
| lineErroredSeconds | long | dsx1IntervalLESs | The number of Line Errored Seconds. |
| pBitCodingViolations | long | dsx1IntervalPCVs | The number of Path Coding Violations. |
| severelyErroredFramingSeconds | long | dsx1IntervalSEFSs | The number of Severely Errored Framing Seconds. |
| severelyErroredSeconds | long | dsx1IntervalSESs | The number of Severely Errored Seconds. |
| unavailableSeconds | long | dsx1IntervalUASs | The number of Unavailable Seconds. This object may decrease if the occurrence of unavailable seconds occurs across an interval boundary. |
| **DS1TotalStats**<br>MIB table name: DS1-MIB.dsx1TotalTable<br>Monitored class: tdmequipment.DS1E1Channel | | | |

**(3 of 8)**

| 5620 SAM counter name | Type | MIB counter name | Description |
|---|---|---|---|
| burstyErroredSeconds | long | dsx1TotalBESs | The number of Bursty Errored Seconds (BESs) encountered by a DS1 interface in the previous 24 hour interval. Invalid 15 minute intervals count as 0. |
| controlledSlipSeconds | long | dsx1TotalCSSs | The number of Controlled Slip Seconds encountered by a DS1 interface in the previous 24 hour interval. Invalid 15 minute intervals count as 0. |
| degradedMinutes | long | dsx1TotalDMs | The number of Degraded Minutes (DMs) encountered by a DS1 interface in the previous 24 hour interval. Invalid 15 minute intervals count as 0. |
| erroredSeconds | long | dsx1TotalESs | The sum of Errored Seconds encountered by a DS1 interface in the previous 24 hour interval. Invalid 15 minute intervals count as 0. |
| lineCodingViolations | long | dsx1TotalLCVs | The number of Line Code Violations (LCVs) encountered by a DS1 interface in the current 15 minute interval. Invalid 15 minute intervals count as 0. |
| lineErroredSeconds | long | dsx1TotalLESs | The number of Line Errored Seconds encountered by a DS1 interface in the previous 24 hour interval. Invalid 15 minute intervals count as 0. |
| pBitCodingViolations | long | dsx1TotalPCVs | The number of Path Coding Violations encountered by a DS1 interface in the previous 24 hour interval. Invalid 15 minute intervals count as 0. |
| severelyErroredFramingSeconds | long | dsx1TotalSEFSs | The number of Severely Errored Framing Seconds encountered by a DS1 interface in the previous 24 hour interval. Invalid 15 minute intervals count as 0. |
| severelyErroredSeconds | long | dsx1TotalSESs | The number of Severely Errored Seconds encountered by a DS1 interface in the previous 24 hour interval. Invalid 15 minute intervals count as 0. |
| unavailableSeconds | long | dsx1TotalUASs | The number of Unavailable Seconds encountered by a DS1 interface in the previous 24 hour interval. Invalid 15 minute intervals count as 0. |
| **DS3CurrentStats**<br>MIB table name: DS3-MIB.dsx3CurrentTable<br>Monitored class: tdmequipment.DS3E3Channel | | | |
| cBitCodingViolations | long | dsx3CurrentCCVs | The number of C-bit Coding Violations. |
| cBitErroredSeconds | long | dsx3CurrentCESs | The number of C-bit Errored Seconds. |
| cBitSeverelyErroredSeconds | long | dsx3CurrentCSESs | The number of C-bit Severely Errored Seconds. |
| lineCodingViolations | long | dsx3CurrentLCVs | The counter associated with the number of Line Coding Violations. |
| lineErroredSeconds | long | dsx3CurrentLESs | The number of Line Errored Seconds. |
| pBitCodingViolations | long | dsx3CurrentPCVs | The counter associated with the number of P-bit Coding Violations. |

**(4 of 8)**

| 5620 SAM counter name | Type | MIB counter name | Description |
|---|---|---|---|
| pBitErroredSeconds | long | dsx3CurrentPESs | The counter associated with the number of P-bit Errored Seconds. |
| pBitSeverelyErroredSeconds | long | dsx3CurrentPSESs | The counter associated with the number of P-bit Severely Errored Seconds. |
| severelyErroredFramingSeconds | long | dsx3CurrentSEFSs | The counter associated with the number of Severely Errored Framing Seconds. |
| unavailableSeconds | long | dsx3CurrentUASs | The counter associated with the number of Unavailable Seconds. |
| **DS3FarEndCurrentStats**<br>MIB table name: DS3-MIB.dsx3FarEndCurrentTable<br>Monitored class: tdmequipment.DS3E3Channel | | | |
| cBitCodingViolations | long | dsx3FarEndCurrentCCVs | The counter associated with the number of Far End C-bit Coding Violations reported via the far end block error count. |
| cBitErroredSeconds | long | dsx3FarEndCurrentCESs | The counter associated with the number of Far End C-bit Errored Seconds. |
| cBitSeverelyErroredSeconds | long | dsx3FarEndCurrentCSESs | The counter associated with the number of Far End C-bit Severely Errored Seconds. |
| invalidIntervals | int | dsx3FarEndInvalidIntervals | The number of intervals in the range from 0 to dsx3FarEndValidIntervals for which no data is available. This object will typically be zero except in cases where the data for some intervals are not available (e.g., in proxy situations). |
| timeElapsed | int | dsx3FarEndTimeElapsed | The number of seconds that have elapsed since the beginning of the far end current error-measurement period. If, for some reason, such as an adjustment in the system's time-of-day clock, the current interval exceeds the maximum value, the agent will return the maximum value. |
| unavailableSeconds | long | dsx3FarEndCurrentUASs | The counter associated with the number of Far End unavailable seconds. |
| validIntervals | int | dsx3FarEndValidIntervals | The number of previous far end intervals for which data was collected. The value will be 96 unless the interface was brought online within the last 24 hours, in which case the value will be the number of complete 15 minute far end intervals since the interface has been online. In the case where the agent is a proxy, it is possible that some intervals are unavailable. In this case, this interval is the maximum interval number for which data is available. |
| **DS3FarEndIntervalStats**<br>MIB table name: DS3-MIB.dsx3FarEndIntervalTable<br>Monitored class: tdmequipment.DS3E3Channel | | | |
| cBitCodingViolations | long | dsx3FarEndIntervalCCVs | The counter associated with the number of Far End C-bit Coding Violations reported via the far end block error count. |

**(5 of 8)**

| 5620 SAM counter name | Type | MIB counter name | Description |
|---|---|---|---|
| cBitErroredSeconds | long | dsx3FarEndIntervalCESs | The counter associated with the number of Far End C-bit Errored Seconds encountered by a DS3 interface in one of the previous 96, individual 15 minute, intervals. In the case where the agent is a proxy and data is not available, return noSuchInstance. |
| cBitSeverelyErroredSeconds | long | dsx3FarEndIntervalCSESs | The counter associated with the number of Far End C-bit Severely Errored Seconds. |
| intervalNumber | int | dsx3FarEndIntervalNumber | A number between 1 and 96, where 1 is the most recently completed 15 minute interval and 96 is the 15 minutes interval completed 23 hours and 45 minutes prior to interval 1. |
| unavailableSeconds | long | dsx3FarEndIntervalUASs | The counter associated with the number of Far End unavailable seconds. |
| **DS3FarEndTotalStats**<br>MIB table name: DS3-MIB.dsx3FarEndTotalTable<br>Monitored class: tdmequipment.DS3E3Channel | | | |
| cBitCodingViolations | long | dsx3FarEndTotalCCVs | The counter associated with the number of Far End C-bit Coding Violations reported via the far end block error count encountered by a DS3 interface in the previous 24 hour interval. Invalid 15 minute intervals count as 0. |
| cBitErroredSeconds | long | dsx3FarEndTotalCESs | The counter associated with the number of Far End C-bit Errored Seconds encountered by a DS3 interface in the previous 24 hour interval. Invalid 15 minute intervals count as 0. |
| cBitSeverelyErroredSeconds | long | dsx3FarEndTotalCSESs | The counter associated with the number of Far End C-bit Severely Errored Seconds encountered by a DS3 interface in the previous 24 hour interval. Invalid 15 minute intervals count as 0. |
| unavailableSeconds | long | dsx3FarEndTotalUASs | The counter associated with the number of Far End unavailable seconds encountered by a DS3 interface in the previous 24 hour interval. Invalid 15 minute intervals count as 0. |
| **DS3IntervalStats**<br>MIB table name: DS3-MIB.dsx3IntervalTable<br>Monitored class: tdmequipment.DS3E3Channel | | | |
| cBitCodingViolations | long | dsx3IntervalCCVs | The number of C-bit Coding Violations. |
| cBitErroredSeconds | long | dsx3IntervalCESs | The number of C-bit Errored Seconds. |
| cBitSeverelyErroredSeconds | long | dsx3IntervalCSESs | The number of C-bit Severely Errored Seconds. |
| intervalNumber | int | dsx3IntervalNumber | A number between 1 and 96, where 1 is the most recently completed 15 minute interval and 96 is the 15 minutes interval completed 23 hours and 45 minutes prior to interval 1. |

**(6 of 8)**

| 5620 SAM counter name | Type | MIB counter name | Description |
|---|---|---|---|
| lineCodingViolations | long | dsx3IntervalLCVs | The counter associated with the number of Line Coding Violations. |
| lineErroredSeconds | long | dsx3IntervalLESs | The number of Line Errored Seconds (BPVs or illegal zero sequences). |
| pBitCodingViolations | long | dsx3IntervalPCVs | The counter associated with the number of P-bit Coding Violations. |
| pBitErroredSeconds | long | dsx3IntervalPESs | The counter associated with the number of P-bit Errored Seconds. |
| pBitSeverelyErroredSeconds | long | dsx3IntervalPSESs | The counter associated with the number of P-bit Severely Errored Seconds. |
| severelyErroredFramingSeconds | long | dsx3IntervalSEFSs | The counter associated with the number of Severely Errored Framing Seconds. |
| unavailableSeconds | long | dsx3IntervalUASs | The counter associated with the number of Unavailable Seconds. This object may decrease if the occurrence of unavailable seconds occurs across an interval boundary. |
| **DS3TotalStats**<br>MIB table name: DS3-MIB.dsx3TotalTable<br>Monitored class: tdmequipment.DS3E3Channel | | | |
| cBitCodingViolations | long | dsx3TotalCCVs | The number of C-bit Coding Violations encountered by a DS3 interface in the previous 24 hour interval. Invalid 15 minute intervals count as 0. |
| cBitErroredSeconds | long | dsx3TotalCESs | The number of C-bit Errored Seconds encountered by a DS3 interface in the previous 24 hour interval. Invalid 15 minute intervals count as 0. |
| cBitSeverelyErroredSeconds | long | dsx3TotalCSESs | The number of C-bit Severely Errored Seconds encountered by a DS3 interface in the previous 24 hour interval. Invalid 15 minute intervals count as 0. |
| lineCodingViolations | long | dsx3TotalLCVs | The counter associated with the number of Line Coding Violations encountered by a DS3/E3 interface in the previous 24 hour interval. Invalid 15 minute intervals count as 0. |
| lineErroredSeconds | long | dsx3TotalLESs | The number of Line Errored Seconds (BPVs or illegal zero sequences) encountered by a DS3/E3 interface in the previous 24 hour interval. Invalid 15 minute intervals count as 0. |
| pBitCodingViolations | long | dsx3TotalPCVs | The counter associated with the number of P-bit Coding Violations, encountered by a DS3 interface in the previous 24 hour interval. Invalid 15 minute intervals count as 0. |
| pBitErroredSeconds | long | dsx3TotalPESs | The counter associated with the number of P-bit Errored Seconds, encountered by a DS3 interface in the previous 24 hour interval. Invalid 15 minute intervals count as 0. |

**(7 of 8)**

| 5620 SAM counter name | Type | MIB counter name | Description |
|---|---|---|---|
| pBitSeverelyErroredSeconds | long | dsx3TotalPSESs | The counter associated with the number of P-bit Severely Errored Seconds, encountered by a DS3 interface in the previous 24 hour interval. Invalid 15 minute intervals count as 0. |
| severelyErroredFramingSeconds | long | dsx3TotalSEFSs | The counter associated with the number of Severely Errored Framing Seconds, encountered by a DS3/E3 interface in the previous 24 hour interval. Invalid 15 minute intervals count as 0. |
| unavailableSeconds | long | dsx3TotalUASs | The counter associated with the number of Unavailable Seconds, encountered by a DS3 interface in the previous 24 hour interval. Invalid 15 minute intervals count as 0. |

**(8 of 8)**

### Table A-52 vpls statistics

| 5620 SAM counter name | Type | MIB counter name | Description |
|---|---|---|---|
| **CircuitDhcpRelayCfgStats**<br>MIB table name: TIMETRA-SDP-MIB.sdpBindDhcpStatsTable<br>Monitored class: svt.SdpBinding | | | |
| sdpBindDhcpStatsClntDropdPckts | long | sdpBindDhcpStatsClntDropdPckts | The value of the object sdpBindDhcpStatsClntDropdPckts indicates the number of DHCP client packets that have been dropped on this SDP bind. |
| sdpBindDhcpStatsClntForwdPckts | long | sdpBindDhcpStatsClntForwdPckts | The value of the object sdpBindDhcpStatsClntForwdPckts indicates the number of DHCP client packets that have been forwarded on this SDP bind. |
| sdpBindDhcpStatsClntProxLSPckts | long | sdpBindDhcpStatsClntProxLSPckts | The value of the object sdpBindDhcpStatsClntProxLSPckts indicates the number of DHCP client packets that have been proxied on this SDP bind based on a lease state. The lease itself can have been obtained from a DHCP or RADIUS server. This is the so called lease split functionality. |
| sdpBindDhcpStatsClntProxRadPckts | long | sdpBindDhcpStatsClntProxRadPckts | The value of the object sdpBindDhcpStatsClntProxRadPckts indicates the number of DHCP client packets that have been proxied on this SDP bind based on data received from a RADIUS server. |
| sdpBindDhcpStatsClntSnoopdPckts | long | sdpBindDhcpStatsClntSnoopdPckts | The value of the object sdpBindDhcpStatsClntSnoopdPckts indicates the number of DHCP client packets that have been snooped on this SDP bind. |

**(1 of 14)**

| 5620 SAM counter name | Type | MIB counter name | Description |
|---|---|---|---|
| sdpBindDhcpStatsGenForceRenPckts | long | sdpBindDhcpStatsGenForceRenPckts | The value of the object sdpBindDhcpStatsGenForceRenPckts indicates the number of DHCP FORCERENEW messages spoofed on this SDP bind to the DHCP clients. |
| sdpBindDhcpStatsGenReleasePckts | long | sdpBindDhcpStatsGenReleasePckts | The value of the object sdpBindDhcpStatsGenReleasePckts indicates the number of DHCP RELEASE messages spoofed on this SDP bind to the DHCP server. |
| sdpBindDhcpStatsSrvrDropdPckts | long | sdpBindDhcpStatsSrvrDropdPckts | The value of the object sdpBindDhcpStatsSrvrDropdPckts indicates the number of DHCP server packets that have been dropped on this SDP bind. |
| sdpBindDhcpStatsSrvrForwdPckts | long | sdpBindDhcpStatsSrvrForwdPckts | The value of the object sdpBindDhcpStatsSrvrForwdPckts indicates the number of DHCP server packets that have been forwarded on this SDP bind. |
| sdpBindDhcpStatsSrvrSnoopdPckts | long | sdpBindDhcpStatsSrvrSnoopdPckts | The value of the object sdpBindDhcpStatsSrvrSnoopdPckts indicates the number of DHCP server packets that have been snooped on this SDP bind. |
| **InterfacePimSnoopingStats**<br>MIB table name: TIMETRA-PIM-SNOOPING-MIB.tmnxPimSnpgIfStatsTable<br>Monitored class: vpls.InterfacePimSnooping | | | |
| tmnxPimSnpgIfJoinPolicyDrops | long | tmnxPimSnpgIfJoinPolicyDrops | The value of tmnxPimSnpgIfJoinPolicyDrops indicates the number of times the join policy match resulted in dropping PIM Join-Prune Message or one of the source group contained in the message. |
| tmnxPimSnpgIfRxBadChecksumDscrd | long | tmnxPimSnpgIfRxBadChecksumDscrd | The value of tmnxPimSnpgIfRxBadChecksumDscrd indicates the number of PIM messages received on this interface which were discarded because of bad checksum. |
| tmnxPimSnpgIfRxBadEncodings | long | tmnxPimSnpgIfRxBadEncodings | The value of tmnxPimSnpgIfRxBadEncodings indicates the number of PIM messages with bad encodings received on this interface. |
| tmnxPimSnpgIfRxBadVersionDscrd | long | tmnxPimSnpgIfRxBadVersionDscrd | The value of tmnxPimSnpgIfRxBadVersionDscrd indicates the number of PIM messages with bad versions received on this interface. |
| tmnxPimSnpgIfRxHellos | long | tmnxPimSnpgIfRxHellos | The value of tmnxPimSnpgIfRxHellos indicates the number of PIM hello messages received on this interface. |
| tmnxPimSnpgIfRxHellosDropped | long | tmnxPimSnpgIfRxHellosDropped | The value of tmnxPimSnpgIfRxHellosDropped indicates the number of PIM Hello messages which were received on this interface but were dropped. |

**(2 of 14)**

| 5620 SAM counter name | Type | MIB counter name | Description |
|---|---|---|---|
| tmnxPimSnpgIfRxJoinPruneErrs | long | tmnxPimSnpgIfRxJoinPruneErrs | The value of tmnxPimSnpgIfRxJoinPruneErrs indicates the number of errors while processing Join-Prune messages received on this interface. |
| tmnxPimSnpgIfRxJoinPrunes | long | tmnxPimSnpgIfRxJoinPrunes | The value of tmnxPimSnpgIfRxJoinPrunes indicates the number of PIM Join Prune messages received on this interface. |
| tmnxPimSnpgIfRxNbrUnknown | long | tmnxPimSnpgIfRxNbrUnknown | The value of tmnxPimSnpgIfRxNbrUnknown indicates the number of PIM messages (other than Hello messages) which were received on this interface and were rejected because the adjacency with the neighbor router was not already established. |
| tmnxPimSnpgIfRxPkts | long | tmnxPimSnpgIfRxPkts | The value of tmnxPimSnpgIfRxPkts indicates the number of multicast data packets received on this interface. |
| tmnxPimSnpgIfSGTypes | long | tmnxPimSnpgIfSGTypes | The value of tmnxPimSnpgIfSGTypes indicates the number of (S,G) entries in tmnxPimSnpgIfGrpSrcTable. |
| tmnxPimSnpgIfStarGTypes | long | tmnxPimSnpgIfStarGTypes | The value of tmnxPimSnpgIfStarGTypes indicates the number of (*,G) entries in tmnxPimSnpgIfGrpSrcTable. |
| tmnxPimSnpgIfTxJoinPrunes | long | tmnxPimSnpgIfTxJoinPrunes | The value of tmnxPimSnpgIfTxJoinPrunes indicates the number of PIM Join Prune messages transmitted on this interface. |
| tmnxPimSnpgIfTxPkts | long | tmnxPimSnpgIfTxPkts | The value of tmnxPimSnpgIfTxPkts indicates the number of multicast data packets transmitted on this interface. |
| **L2AccessInterfaceIgmpSnpgErrorStats**<br>MIB table name: ALCATEL-IGMP-SNOOPING-MIB.sapIgmpSnpgStatsTable<br>Monitored classes:<br>• vpls.AbstractL2AccessInterface<br>• vpls.IL2AccessInterface<br>• mvpls.IL2AccessInterface | | | |
| sapIgmpSnpgImportPolicyDrops | long | sapIgmpSnpgImportPolicyDrops | The value of the object sapIgmpSnpgImportPolicyDrops indicates the number of times an IGMP Group or Source is dropped because of applying an import policy on this SAP. |
| sapIgmpSnpgMaxNumGroupsDrops | long | sapIgmpSnpgMaxNumGroupsDrops | The value of the object sapIgmpSnpgMaxNumGroupsDrops indicates the number of times an IGMP Group is dropped because of exceeding the configured maximum number of groups on this SAP. |
| sapIgmpSnpgMaxNumSourcesDrops | long | sapIgmpSnpgMaxNumSourcesDrops | The value of the object sapIgmpSnpgMaxNumSourcesDrops indicates the number of times an IGMP Source is dropped because of exceeding the configured maximum number of sources per group on this SAP. |

**(3 of 14)**

| 5620 SAM counter name | Type | MIB counter name | Description |
|---|---|---|---|
| sapIgmpSnpgMcacPolicyDrops | long | sapIgmpSnpgMcacPolicyDrops | The value of the object sapIgmpSnpgMcacPolicyDrops indicates the number of times an IGMP Group is dropped because of applying a multicast CAC policy on this SAP. |
| sapIgmpSnpgMcsFailures | long | sapIgmpSnpgMcsFailures | The value of the object sapIgmpSnpgMcsFailures indicates the number of times an IGMP Group on this SAP could not be synced to the MCS (multi-chassis synchronization) database. |
| sapIgmpSnpgRxBadEncodedPkts | long | sapIgmpSnpgRxBadEncodedPkts | The value of the object sapIgmpSnpgRxBadEncodedPkts indicates the number of IGMP packets dropped on this SAP because of a bad encoding. |
| sapIgmpSnpgRxBadIgmpChksmPkts | long | sapIgmpSnpgRxBadIgmpChksmPkts | The value of the object sapIgmpSnpgRxBadIgmpChksmPkts indicates the number of dropped IGMP packets on this SAP because of a bad IGMP header checksum. |
| sapIgmpSnpgRxBadIpChksmPkts | long | sapIgmpSnpgRxBadIpChksmPkts | The value of the object sapIgmpSnpgRxBadIpChksmPkts indicates the number of dropped IGMP packets on this SAP because of a bad IPv4 header checksum. |
| sapIgmpSnpgRxBadLenPkts | long | sapIgmpSnpgRxBadLenPkts | The value of the object sapIgmpSnpgRxBadLenPkts indicates the number of IGMP packets dropped on this SAP because of a bad length. |
| sapIgmpSnpgRxNoRtrAlertPkts | long | sapIgmpSnpgRxNoRtrAlertPkts | The value of the object sapIgmpSnpgRxNoRtrAlertPkts indicates the number of IGMP packets dropped on this SAP because the Router Alert Option in the IP packet is not set. |
| sapIgmpSnpgRxWrongVersionPkts | long | sapIgmpSnpgRxWrongVersionPkts | The value of the object sapIgmpSnpgRxWrongVersionPkts indicates the total number of IGMP packets with a wrong version received on this SAP. |
| sapIgmpSnpgRxZeroSrcAdrPkts | long | sapIgmpSnpgRxZeroSrcAdrPkts | The value of the object sapIgmpSnpgRxZeroSrcAdrPkts indicates the number of IGMP packets dropped on this SAP because they contain a zero source IPv4 address. |
| sapIgmpSnpgSendQueryCfgDrops | long | sapIgmpSnpgSendQueryCfgDrops | The value of the object sapIgmpSnpgSendQueryCfgDrops indicates the number of times an IGMP Query is dropped because the object sapIgmpSnpgCfgSendQueries for this SAP is set to 'enabled(1)'. |
| **L2AccessInterfaceIgmpSnpgStats**<br>MIB table name: ALCATEL-IGMP-SNOOPING-MIB.sapIgmpSnpgStatsTable<br>Monitored classes:<br>• vpls.AbstractL2AccessInterface<br>• vpls.IL2AccessInterface<br>• mvpls.IL2AccessInterface | | | |

**(4 of 14)**

| 5620 SAM counter name | Type | MIB counter name | Description |
|---|---|---|---|
| sapIgmpSnpgFwdGenQueries | long | sapIgmpSnpgFwdGenQueries | The value of the object sapIgmpSnpgFwdGenQueries indicates the number of IGMP General Queries forwarded on this SAP. |
| sapIgmpSnpgFwdGrpSpecQueries | long | sapIgmpSnpgFwdGrpSpecQueries | The value of the object sapIgmpSnpgFwdGrpSpecQueries indicates the number of IGMP Group-Specific Queries forwarded on this SAP. |
| sapIgmpSnpgFwdSrcSpecQueries | long | sapIgmpSnpgFwdSrcSpecQueries | The value of the object sapIgmpSnpgFwdSrcSpecQueries indicates the number of IGMP Group-And-Source-Specific Queries forwarded on this SAP. |
| sapIgmpSnpgFwdUnknownType | long | sapIgmpSnpgFwdUnknownType | The value of the object sapIgmpSnpgFwdUnknownType indicates the number of IGMP unknown type packets forwarded on this SAP. |
| sapIgmpSnpgFwdV1Reports | long | sapIgmpSnpgFwdV1Reports | The value of the object sapIgmpSnpgFwdV1Reports indicates the number of IGMPv1 Reports forwarded on this SAP. |
| sapIgmpSnpgFwdV2Leaves | long | sapIgmpSnpgFwdV2Leaves | The value of the object sapIgmpSnpgFwdV2Leaves indicates the number of IGMPv2 Leaves forwarded on this SAP. |
| sapIgmpSnpgFwdV2Reports | long | sapIgmpSnpgFwdV2Reports | The value of the object sapIgmpSnpgFwdV2Reports indicates the number of IGMPv2 Reports forwarded on this SAP. |
| sapIgmpSnpgFwdV3Reports | long | sapIgmpSnpgFwdV3Reports | The value of the object sapIgmpSnpgFwdV3Reports indicates the number of IGMPv3 Reports forwarded on this SAP. |
| sapIgmpSnpgRxGenQueries | long | sapIgmpSnpgRxGenQueries | The value of the object sapIgmpSnpgRxGenQueries indicates the number of IGMP General Queries received on this SAP. |
| sapIgmpSnpgRxGrpSpecQueries | long | sapIgmpSnpgRxGrpSpecQueries | The value of the object sapIgmpSnpgRxGrpSpecQueries indicates the number of IGMP Group-Specific Queries received on this SAP. |
| sapIgmpSnpgRxSrcSpecQueries | long | sapIgmpSnpgRxSrcSpecQueries | The value of the object sapIgmpSnpgRxSrcSpecQueries indicates the number of IGMP Group-And-Source-Specific Queries received on this SAP. |
| sapIgmpSnpgRxUnknownType | long | sapIgmpSnpgRxUnknownType | The value of the object sapIgmpSnpgRxUnknownType indicates the number of IGMP unknown type packets received on this SAP. |
| sapIgmpSnpgRxV1Reports | long | sapIgmpSnpgRxV1Reports | The value of the object sapIgmpSnpgRxV1Reports indicates the number of IGMPv1 Reports received on this SAP. |

**(5 of 14)**

| 5620 SAM counter name | Type | MIB counter name | Description |
|---|---|---|---|
| sapIgmpSnpgRxV2Leaves | long | sapIgmpSnpgRxV2Leaves | The value of the object sapIgmpSnpgRxV2Leaves indicates the number of IGMPv2 Leaves received on this SAP. |
| sapIgmpSnpgRxV2Reports | long | sapIgmpSnpgRxV2Reports | The value of the object sapIgmpSnpgRxV2Reports indicates the number of IGMPv2 Reports received on this SAP. |
| sapIgmpSnpgRxV3Reports | long | sapIgmpSnpgRxV3Reports | The value of the object sapIgmpSnpgRxV3Reports indicates the number of IGMPv3 Reports received on this SAP. |
| sapIgmpSnpgTxGenQueries | long | sapIgmpSnpgTxGenQueries | The value of the object sapIgmpSnpgTxGenQueries indicates the number of IGMP General Queries transmitted on this SAP. |
| sapIgmpSnpgTxGrpSpecQueries | long | sapIgmpSnpgTxGrpSpecQueries | The value of the object sapIgmpSnpgTxGrpSpecQueries indicates the number of IGMP Group-Specific Queries transmitted on this SAP. |
| sapIgmpSnpgTxSrcSpecQueries | long | sapIgmpSnpgTxSrcSpecQueries | The value of the object sapIgmpSnpgTxSrcSpecQueries indicates the number of IGMP Group-And-Source-Specific Queries transmitted on this SAP. |
| sapIgmpSnpgTxV1Reports | long | sapIgmpSnpgTxV1Reports | The value of the object sapIgmpSnpgTxV1Reports indicates the number of IGMPv1 Reports transmitted on this SAP. |
| sapIgmpSnpgTxV2Leaves | long | sapIgmpSnpgTxV2Leaves | The value of the object sapIgmpSnpgTxV2Leaves indicates the number of IGMPv2 Leaves transmitted on this SAP. |
| sapIgmpSnpgTxV2Reports | long | sapIgmpSnpgTxV2Reports | The value of the object sapIgmpSnpgTxV2Reports indicates the number of IGMPv2 Reports transmitted on this SAP. |
| sapIgmpSnpgTxV3Reports | long | sapIgmpSnpgTxV3Reports | The value of the object sapIgmpSnpgTxV3Reports indicates the number of IGMPv3 Reports transmitted on this SAP. |
| **L2AccessInterfaceMldMvrStats**<br>MIB table name: TIMETRA-MLD-SNOOPING-MIB.sapMldSnpgStatsTable<br>Monitored class: vpls.AbstractL2AccessInterface | | | |
| sapMldSnpgMvrFromVplsCfgDrops | long | sapMldSnpgMvrFromVplsCfgDrops | The value of the object sapMldSnpgMvrFromVplsCfgDrops indicates the number of times an MLD group or Query is dropped because of applying the sapMldSnpgCfgMvrFromVplsId configuration on this SAP. |

**(6 of 14)**

| 5620 SAM counter name | Type | MIB counter name | Description |
|---|---|---|---|
| sapMldSnpgMvrToSapCfgDrops | long | sapMldSnpgMvrToSapCfgDrops | The value of the object sapMldSnpgMvrToSapCfgDrops indicates the number times an MLD Report or Query is dropped because of applying the sapMldSnpgCfgMvrToSapPortId and sapMldSnpgCfgMvrToSapEncapVal configuration on this SAP. |
| **L2AccessInterfaceMldSnpgErrorStats**<br>MIB table name: TIMETRA-MLD-SNOOPING-MIB.sapMldSnpgStatsTable<br>Monitored class: vpls.AbstractL2AccessInterface | | | |
| sapMldSnpgImportPolicyDrops | long | sapMldSnpgImportPolicyDrops | The value of the object sapMldSnpgImportPolicyDrops indicates the number of times an MLD group or source is dropped because of applying an import policy on this SAP. |
| sapMldSnpgMaxNumGroupsDrops | long | sapMldSnpgMaxNumGroupsDrops | The value of the object sapMldSnpgMaxNumGroupsDrops indicates the number of times an MLD group is dropped because of exceeding the configured maximum number of groups on this SAP. |
| sapMldSnpgMcsFailures | long | sapMldSnpgMcsFailures | The value of the object sapMldSnpgMcsFailures indicates the number of times an MLD group on this SAP could not be synced to the MCS (multi-chassis synchronization) database. |
| sapMldSnpgRxBadEncodedPkts | long | sapMldSnpgRxBadEncodedPkts | The value of the object sapMldSnpgRxBadEncodedPkts indicates the number of MLD packets dropped on this SAP because of a bad encoding. |
| sapMldSnpgRxBadLenPkts | long | sapMldSnpgRxBadLenPkts | The value of the object sapMldSnpgRxBadLenPkts indicates the number of MLD packets dropped on this SAP because of a bad length. |
| sapMldSnpgRxBadMldChksmPkts | long | sapMldSnpgRxBadMldChksmPkts | The value of the object sapMldSnpgRxBadMldChksmPkts indicates the number of dropped MLD packets on this SAP because of a bad MLD header checksum. |
| sapMldSnpgRxNoRtrAlertPkts | long | sapMldSnpgRxNoRtrAlertPkts | The value of the object sapMldSnpgRxNoRtrAlertPkts indicates the number of MLD packets dropped on this SAP because the Router Alert Option in the IP packet is not set. |
| sapMldSnpgRxWrongVersionPkts | long | sapMldSnpgRxWrongVersionPkts | The value of the object sapMldSnpgRxWrongVersionPkts indicates the total number of MLD packets with a wrong version received on this SAP. |
| sapMldSnpgRxZeroSrcAdrPkts | long | sapMldSnpgRxZeroSrcAdrPkts | The value of the object sapMldSnpgRxZeroSrcAdrPkts indicates the number of MLD packets dropped on this SAP because they contain a zero source IPv6 address. |

**(7 of 14)**

| 5620 SAM counter name | Type | MIB counter name | Description |
|---|---|---|---|
| sapMldSnpgSendQueryCfgDrops | long | sapMldSnpgSendQueryCfgDrops | The value of the object sapMldSnpgSendQueryCfgDrops indicates the number of times an MLD Query is dropped because the object sapMldSnpgCfgSendQueries for this SAP is set to 'inService(2)'. |
| **L2AccessInterfaceMldSnpgStats**<br>MIB table name: TIMETRA-MLD-SNOOPING-MIB.sapMldSnpgStatsTable<br>Monitored class: vpls.AbstractL2AccessInterface | | | |
| sapMldSnpgFwdGenQueries | long | sapMldSnpgFwdGenQueries | The value of the object sapMldSnpgFwdGenQueries indicates the number of MLD General Queries forwarded on this SAP. |
| sapMldSnpgFwdGrpSpecQueries | long | sapMldSnpgFwdGrpSpecQueries | The value of the object sapMldSnpgFwdGrpSpecQueries indicates the number of MLD Group-Specific Queries forwarded on this SAP. |
| sapMldSnpgFwdSrcSpecQueries | long | sapMldSnpgFwdSrcSpecQueries | The value of the object sapMldSnpgFwdSrcSpecQueries indicates the number of MLD Group-And-Source-Specific Queries forwarded on this SAP. |
| sapMldSnpgFwdUnknownType | long | sapMldSnpgFwdUnknownType | The value of the object sapMldSnpgFwdUnknownType indicates the number of MLD unknown type packets forwarded on this SAP. |
| sapMldSnpgFwdV1Leaves | long | sapMldSnpgFwdV1Leaves | The value of the object sapMldSnpgFwdV1Leaves indicates the number of MLDv1 Leaves forwarded on this SAP. |
| sapMldSnpgFwdV1Reports | long | sapMldSnpgFwdV1Reports | The value of the object sapMldSnpgFwdV1Reports indicates the number of MLDv1 Reports forwarded on this SAP. |
| sapMldSnpgFwdV2Reports | long | sapMldSnpgFwdV2Reports | The value of the object sapMldSnpgFwdV2Reports indicates the number of MLDv2 Reports forwarded on this SAP. |
| sapMldSnpgRxGenQueries | long | sapMldSnpgRxGenQueries | The value of the object sapMldSnpgRxGenQueries indicates the number of MLD General Queries received on this SAP. |
| sapMldSnpgRxGrpSpecQueries | long | sapMldSnpgRxGrpSpecQueries | The value of the object sapMldSnpgRxGrpSpecQueries indicates the number of MLD Group-Specific Queries received on this SAP. |
| sapMldSnpgRxLocalScopePkts | long | sapMldSnpgRxLocalScopePkts | The value of the object sapMldSnpgRxLocalScopePkts indicates the number of MLD packets received on the link-local scope IPv6 multicast address. |

**(8 of 14)**

| 5620 SAM counter name | Type | MIB counter name | Description |
|---|---|---|---|
| sapMldSnpgRxRsvdScopePkts | long | sapMldSnpgRxRsvdScopePkts | The value of the object sapMldSnpgRxRsvdScopePkts indicates the number of MLD packets received on the reserved scope IPv6 multicast address. |
| sapMldSnpgRxSrcSpecQueries | long | sapMldSnpgRxSrcSpecQueries | The value of the object sapMldSnpgRxSrcSpecQueries indicates the number of MLD Group-And-Source-Specific Queries received on this SAP. |
| sapMldSnpgRxUnknownType | long | sapMldSnpgRxUnknownType | The value of the object sapMldSnpgRxUnknownType indicates the number of MLD unknown type packets received on this SAP. |
| sapMldSnpgRxV1Leaves | long | sapMldSnpgRxV1Leaves | The value of the object sapMldSnpgRxV1Leaves indicates the number of MLDv1 Leaves received on this SAP. |
| sapMldSnpgRxV1Reports | long | sapMldSnpgRxV1Reports | The value of the object sapMldSnpgRxV1Reports indicates the number of MLDv1 Reports received on this SAP. |
| sapMldSnpgRxV2Reports | long | sapMldSnpgRxV2Reports | The value of the object sapMldSnpgRxV2Reports indicates the number of MLDv2 Reports received on this SAP. |
| sapMldSnpgTxGenQueries | long | sapMldSnpgTxGenQueries | The value of the object sapMldSnpgTxGenQueries indicates the number of MLD General Queries transmitted on this SAP. |
| sapMldSnpgTxGrpSpecQueries | long | sapMldSnpgTxGrpSpecQueries | The value of the object sapMldSnpgTxGrpSpecQueries indicates the number of MLD Group-Specific Queries transmitted on this SAP. |
| sapMldSnpgTxSrcSpecQueries | long | sapMldSnpgTxSrcSpecQueries | The value of the object sapMldSnpgTxSrcSpecQueries indicates the number of MLD Group-And-Source-Specific Queries transmitted on this SAP. |
| sapMldSnpgTxV1Leaves | long | sapMldSnpgTxV1Leaves | The value of the object sapMldSnpgTxV1Leaves indicates the number of MLDv1 Leaves transmitted on this SAP. |
| sapMldSnpgTxV1Reports | long | sapMldSnpgTxV1Reports | The value of the object sapMldSnpgTxV1Reports indicates the number of MLDv1 Reports transmitted on this SAP. |
| sapMldSnpgTxV2Reports | long | sapMldSnpgTxV2Reports | The value of the object sapMldSnpgTxV2Reports indicates the number of MLDv2 Reports transmitted on this SAP. |
| **L2AccessInterfaceMvrStats**<br>MIB table name: ALCATEL-IGMP-SNOOPING-MIB.sapIgmpSnpgStatsTable<br>Monitored class: vpls.AbstractL2AccessInterface | | | |

**(9 of 14)**

| 5620 SAM counter name | Type | MIB counter name | Description |
|---|---|---|---|
| sapIgmpSnpgMvrFromVplsCfgDrops | long | sapIgmpSnpgMvrFromVplsCfgDrops | The value of the object sapIgmpSnpgMvrFromVplsCfgDrops indicates the number of times an IGMP Group or Query is dropped because of applying the sapIgmpSnpgCfgMvrFromVplsId configuration on this SAP. |
| sapIgmpSnpgMvrToSapCfgDrops | long | sapIgmpSnpgMvrToSapCfgDrops | The value of the object sapIgmpSnpgMvrToSapCfgDrops indicates the number times an IGMP Report or Query is dropped because of applying the sapIgmpSnpgCfgMvrToSapPortId and sapIgmpSnpgCfgMvrToSapEncapVal configuration on this SAP. |
| **L2AccessItfDhcpRelayCfgStats**<br>MIB table name: TIMETRA-SAP-MIB.sapTlsDhcpStatsTable<br>Monitored class: vpls.AbstractL2AccessInterface | | | |
| sapTlsDhcpStatsClntDropdPckts | long | sapTlsDhcpStatsClntDropdPckts | The value of the object sapTlsDhcpStatsClntDropdPckts indicates the number of DHCP client packets that have been dropped on this SAP. |
| sapTlsDhcpStatsClntForwdPckts | long | sapTlsDhcpStatsClntForwdPckts | The value of the object sapTlsDhcpStatsClntForwdPckts indicates the number of DHCP client packets that have been forwarded on this SAP. |
| sapTlsDhcpStatsClntProxLSPckts | long | sapTlsDhcpStatsClntProxLSPckts | The value of the object sapTlsDhcpStatsClntProxLSPckts indicates the number of DHCP client packets that have been proxied on this SAP based on a lease state. The lease itself can have been obtained from a DHCP or RADIUS server. This is the so called lease split functionality. |
| sapTlsDhcpStatsClntProxRadPckts | long | sapTlsDhcpStatsClntProxRadPckts | The value of the object sapTlsDhcpStatsClntProxRadPckts indicates the number of DHCP client packets that have been proxied on this SAP based on data received from a RADIUS server. |
| sapTlsDhcpStatsClntSnoopdPckts | long | sapTlsDhcpStatsClntSnoopdPckts | The value of the object sapTlsDhcpStatsClntSnoopdPckts indicates the number of DHCP client packets that have been snooped on this SAP. |
| sapTlsDhcpStatsGenForceRenPckts | long | sapTlsDhcpStatsGenForceRenPckts | The value of the object sapTlsDhcpStatsGenForceRenPckts indicates the number of DHCP FORCERENEW messages spoofed on this SAP to the DHCP clients. |
| sapTlsDhcpStatsGenReleasePckts | long | sapTlsDhcpStatsGenReleasePckts | The value of the object sapTlsDhcpStatsGenReleasePckts indicates the number of DHCP RELEASE messages spoofed on this SAP to the DHCP server. |

**(10 of 14)**

| 5620 SAM counter name | Type | MIB counter name | Description |
|---|---|---|---|
| sapTlsDhcpStatsSrvrDropdPckts | long | sapTlsDhcpStatsSrvrDropdPckts | The value of the object sapTlsDhcpStatsSrvrDropdPckts indicates the number of DHCP server packets that have been dropped on this SAP. |
| sapTlsDhcpStatsSrvrForwdPckts | long | sapTlsDhcpStatsSrvrForwdPckts | The value of the object sapTlsDhcpStatsSrvrForwdPckts indicates the number of DHCP server packets that have been forwarded on this SAP. |
| sapTlsDhcpStatsSrvrSnoopdPckts | long | sapTlsDhcpStatsSrvrSnoopdPckts | The value of the object sapTlsDhcpStatsSrvrSnoopdPckts indicates the number of DHCP server packets that have been snooped on this SAP. |
| **SdpBindingMldSnpgErrorStats**<br>MIB table name: TIMETRA-MLD-SNOOPING-MIB.sdpBindMldSnpgStatsTable<br>Monitored class: vpls.SdpBindingMldSnpgCfg | | | |
| sdpBndMldSnpgImportPolicyDrops | long | sdpBndMldSnpgImportPolicyDrops | The value of the object sdpBndMldSnpgImportPolicyDrops indicates the number of times an MLD group or source is dropped because of applying an import policy on this SDP Bind. |
| sdpBndMldSnpgMaxNumGroupsDrops | long | sdpBndMldSnpgMaxNumGroupsDrops | The value of the object sdpBndMldSnpgMaxNumGroupsDrops indicates the number of times an MLD group is dropped because of exceeding the configured maximum number of groups on this SDP Bind. |
| sdpBndMldSnpgRxBadEncodedPkts | long | sdpBndMldSnpgRxBadEncodedPkts | The value of the object sdpBndMldSnpgRxBadEncodedPkts indicates the number of MLD packets dropped on this SDP Bind because of a bad encoding. |
| sdpBndMldSnpgRxBadLenPkts | long | sdpBndMldSnpgRxBadLenPkts | The value of the object sdpBndMldSnpgRxBadLenPkts indicates the number of MLD packets dropped on this SDP Bind because of a bad length. |
| sdpBndMldSnpgRxBadMldChksmPkts | long | sdpBndMldSnpgRxBadMldChksmPkts | The value of the object sdpBndMldSnpgRxBadMldChksmPkts indicates the number of dropped MLD packets on this SDP Bind because of a bad MLD header checksum. |
| sdpBndMldSnpgRxLocalScopePkts | long | sdpBndMldSnpgRxLocalScopePkts | The value of the object sdpBndMldSnpgRxLocalScopePkts indicates the number of MLD packets received on the link-local scope IPv6 multicast address. |
| sdpBndMldSnpgRxNoRtrAlertPkts | long | sdpBndMldSnpgRxNoRtrAlertPkts | The value of the object sdpBndMldSnpgRxNoRtrAlertPkts indicates the number of MLD packets dropped on this SDP Bind because the Router Alert Option in the IP packet is not set. |

**(11 of 14)**

| 5620 SAM counter name | Type | MIB counter name | Description |
|---|---|---|---|
| sdpBndMldSnpgRxRsvdScopePkts | long | sdpBndMldSnpgRxRsvdScopePkts | The value of the object sdpBndMldSnpgRxRsvdScopePkts indicates the number of MLD packets received on the reserved scope IPv6 multicast address. |
| sdpBndMldSnpgRxWrongVersionPkts | long | sdpBndMldSnpgRxWrongVersionPkts | The value of the object sdpBndMldSnpgRxWrongVersionPkts indicates the total number of MLD packets with a wrong version received on this SDP Bind. |
| sdpBndMldSnpgRxZeroSrcAdrPkts | long | sdpBndMldSnpgRxZeroSrcAdrPkts | The value of the object sdpBndMldSnpgRxZeroSrcAdrPkts indicates the number of MLD packets dropped on this SDP Bind because they contain a zero source IPv6 address. |
| sdpBndMldSnpgSendQueryCfgDrops | long | sdpBndMldSnpgSendQueryCfgDrops | The value of the object sdpBndMldSnpgSendQueryCfgDrops indicates the number of times an MLD Query is dropped because the object sdpBndMldSnpgCfgSendQueries for this SDP Bind is set to 'inService(2)'. |
| **SdpBindingMldSnpgStats**<br>MIB table name: TIMETRA-MLD-SNOOPING-MIB.sdpBindMldSnpgStatsTable<br>Monitored class: vpls.SdpBindingMldSnpgCfg | | | |
| sdpBndMldSnpgFwdGenQueries | long | sdpBndMldSnpgFwdGenQueries | The value of the object sdpBndMldSnpgFwdGenQueries indicates the number of MLD General Queries forwarded on this SDP Bind. |
| sdpBndMldSnpgFwdGrpSpecQueries | long | sdpBndMldSnpgFwdGrpSpecQueries | The value of the object sdpBndMldSnpgFwdGrpSpecQueries indicates the number of MLD Group-Specific Queries forwarded on this SDP Bind. |
| sdpBndMldSnpgFwdSrcSpecQueries | long | sdpBndMldSnpgFwdSrcSpecQueries | The value of the object sdpBndMldSnpgFwdSrcSpecQueries indicates the number of MLD Group-And-Source-Specific Queries forwarded on this SDP Bind. |
| sdpBndMldSnpgFwdUnknownType | long | sdpBndMldSnpgFwdUnknownType | The value of the object sdpBndMldSnpgFwdUnknownType indicates the number of MLD unknown type packets forwarded on this SDP Bind. |
| sdpBndMldSnpgFwdV1Leaves | long | sdpBndMldSnpgFwdV1Leaves | The value of the object sdpBndMldSnpgFwdV1Leaves indicates the number of MLDv1 Leaves forwarded on this SDP Bind. |
| sdpBndMldSnpgFwdV1Reports | long | sdpBndMldSnpgFwdV1Reports | The value of the object sdpBndMldSnpgFwdV1Reports indicates the number of MLDv1 Reports forwarded on this SDP Bind. |
| sdpBndMldSnpgFwdV2Reports | long | sdpBndMldSnpgFwdV2Reports | The value of the object sdpBndMldSnpgFwdV2Reports indicates the number of MLDv2 Reports forwarded on this SDP Bind. |

**(12 of 14)**

| 5620 SAM counter name | Type | MIB counter name | Description |
|---|---|---|---|
| sdpBndMldSnpgRxGenQueries | long | sdpBndMldSnpgRxGenQueries | The value of the object sdpBndMldSnpgRxGenQueries indicates the number of MLD General Queries received on this SDP Bind. |
| sdpBndMldSnpgRxGrpSpecQueries | long | sdpBndMldSnpgRxGrpSpecQueries | The value of the object sdpBndMldSnpgRxGrpSpecQueries indicates the number of MLD Group-Specific Queries received on this SDP Bind. |
| sdpBndMldSnpgRxSrcSpecQueries | long | sdpBndMldSnpgRxSrcSpecQueries | The value of the object sdpBndMldSnpgRxSrcSpecQueries indicates the number of MLD Group-And-Source-Specific Queries received on this SDP Bind. |
| sdpBndMldSnpgRxUnknownType | long | sdpBndMldSnpgRxUnknownType | The value of the object sdpBndMldSnpgRxUnknownType indicates the number of MLD unknown type packets received on this SDP Bind. |
| sdpBndMldSnpgRxV1Leaves | long | sdpBndMldSnpgRxV1Leaves | The value of the object sdpBndMldSnpgRxV1Leaves indicates the number of MLDv1 Leaves received on this SDP Bind. |
| sdpBndMldSnpgRxV1Reports | long | sdpBndMldSnpgRxV1Reports | The value of the object sdpBndMldSnpgRxV1Reports indicates the number of MLDv1 Reports received on this SDP Bind. |
| sdpBndMldSnpgRxV2Reports | long | sdpBndMldSnpgRxV2Reports | The value of the object sdpBndMldSnpgRxV2Reports indicates the number of MLDv2 Reports received on this SDP Bind. |
| sdpBndMldSnpgTxGenQueries | long | sdpBndMldSnpgTxGenQueries | The value of the object sdpBndMldSnpgTxGenQueries indicates the number of MLD General Queries transmitted on this SDP Bind. |
| sdpBndMldSnpgTxGrpSpecQueries | long | sdpBndMldSnpgTxGrpSpecQueries | The value of the object sdpBndMldSnpgTxGrpSpecQueries indicates the number of MLD Group-Specific Queries transmitted on this SDP Bind. |
| sdpBndMldSnpgTxSrcSpecQueries | long | sdpBndMldSnpgTxSrcSpecQueries | The value of the object sdpBndMldSnpgTxSrcSpecQueries indicates the number of MLD Group-And-Source-Specific Queries transmitted on this SDP Bind. |
| sdpBndMldSnpgTxV1Leaves | long | sdpBndMldSnpgTxV1Leaves | The value of the object sdpBndMldSnpgTxV1Leaves indicates the number of MLDv1 Leaves transmitted on this SDP Bind. |
| sdpBndMldSnpgTxV1Reports | long | sdpBndMldSnpgTxV1Reports | The value of the object sdpBndMldSnpgTxV1Reports indicates the number of MLDv1 Reports transmitted on this SDP Bind. |
| sdpBndMldSnpgTxV2Reports | long | sdpBndMldSnpgTxV2Reports | The value of the object sdpBndMldSnpgTxV2Reports indicates the number of MLDv2 Reports transmitted on this SDP Bind. |

**(13 of 14)**

| 5620 SAM counter name | Type | MIB counter name | Description |
|---|---|---|---|
| **SitePimSnoopingStats**<br>MIB table name: TIMETRA-PIM-SNOOPING-MIB.tmnxPimSnpgGenStatsTable<br>Monitored class: vpls.SitePimSnooping | | | |
| numSGTypes | long | tmnxPimSnpgGenStatsSGTypes | The value of tmnxPimSnpgGenStatsSGTypes indicates the number of entries in tmnxPimSnpgGrpSrcTable for which the source type is 'sg'. |
| numStarGTypes | long | tmnxPimSnpgGenStatsStarGTypes | The value of tmnxPimSnpgGenStatsStarGTypes indicates the number of entries in tmnxPimSnpgGrpSrcTable for which the source type is 'starG'. |
| **SiteSourceGroupRecordPimSnoopingStats**<br>MIB table name: TIMETRA-PIM-SNOOPING-MIB.tmnxPimSnpgGrpSrcStatsTable<br>Monitored classes:<br>• vpls.SiteSourceGroupRecord<br>• vpls.SitePimSnooping | | | |
| tmnxPimSnpgGrpSrcStatsFwdedOct | long | tmnxPimSnpgGrpSrcStatsFwdedOct | The value of tmnxPimSnpgGrpSrcStatsFwdedOct indicates the number of multicast octets that were forwarded to the interfaces in the outgoing interface list. tmnxPimSnpgGrpSrcIfTable lists all the interfaces in the outgoing interface list. |
| tmnxPimSnpgGrpSrcStatsFwdedPkts | long | tmnxPimSnpgGrpSrcStatsFwdedPkts | The value of tmnxPimSnpgGrpSrcStatsFwdedPkts indicates the number of multicast packets that were forwarded to the interfaces in the outgoing interface list. tmnxPimSnpgGrpSrcIfTable lists all the interfaces in the outgoing interface list. |

**(14 of 14)**

### Table A-53 vrrp statistics

| 5620 SAM counter name | Type | MIB counter name | Description |
|---|---|---|---|
| **InstanceAdditionalStats**<br>MIB table name: TIMETRA-VRRP-MIB.tmnxVrrpRouterStatsTable<br>Monitored class: vrrp.Instance | | | |
| addressListDiscards | long | tmnxVrrpStatsAddressListDiscards | The total number of VRRP advertisement packets discarded because the address list did not match the locally configured list for the virtual router. |
| advertiseIntervalDiscards | long | tmnxVrrpStatsAdvertiseIntervalDiscards | The total number of VRRP advertisement packets discarded because the advertisement interval in the received packet was different than the one configured for the local virtual router. |
| advertiseSent | long | tmnxVrrpStatsAdvertiseSent | The total number of VRRP advertisements sent by this virtual router. |

**(1 of 5)**

| 5620 SAM counter name | Type | MIB counter name | Description |
|---|---|---|---|
| masterChanges | long | tmnxVrrpStatsMasterChanges | The value for tmnxVrrpStatsMasterChanges specifies the total number of times the virtual router has seen the master virtual router change. |
| preemptedEvents | long | tmnxVrrpStatsPreemptedEvents | The value for tmnxVrrpStatsPreemptedEvents specifies the total number of times the virtual router has been preempted by another non-owner master with higher priority. |
| preemptEvents | long | tmnxVrrpStatsPreemptEvents | The value for tmnxVrrpStatsPreemptEvents specifies the total number of times the virtual router has preempted another non-owner master with lower priority. |
| totalDiscards | long | tmnxVrrpStatsTotalDiscards | The total number of VRRP advertisement packets discarded for any reason. This includes the packets discarded due to advertise interval mismatch and address list mismatch. |
| **InstanceStats**<br>MIB table name: VRRP-MIB.vrrpRouterStatsTable<br>Monitored class: vrrp.Instance | | | |
| addressListErrors | long | vrrpStatsAddressListErrors | The total number of packets received for which the address list does not match the locally configured list for the virtual router. |
| advertiseIntervalErrors | long | vrrpStatsAdvertiseIntervalErrors | The total number of VRRP advertisement packets received for which the advertisement interval is different than the one configured for the local virtual router. |
| advertiseRcvd | long | vrrpStatsAdvertiseRcvd | The total number of VRRP advertisements received by this virtual router. |
| authFailures | long | vrrpStatsAuthFailures | The total number of VRRP packets received that do not pass the authentication check. |
| authTypeMismatch | long | vrrpStatsAuthTypeMismatch | The total number of packets received with 'Auth Type' not equal to the locally configured authentication method (`vrrpOperAuthType'). |
| becomeMaster | long | vrrpStatsBecomeMaster | The total number of times that this virtual router's state has transitioned to MASTER. |
| invalidAuthType | long | vrrpStatsInvalidAuthType | The total number of packets received with an unknown authentication type. |
| invalidTypePktsRcvd | long | vrrpStatsInvalidTypePktsRcvd | The number of VRRP packets received by the virtual router with an invalid value in the 'type' field. |
| ipTtlErrors | long | vrrpStatsIpTtlErrors | The total number of VRRP packets received by the virtual router with IP TTL (Time-To-Live) not equal to 255. |

**(2 of 5)**

| 5620 SAM counter name | Type | MIB counter name | Description |
|---|---|---|---|
| packetLengthErrors | long | vrrpStatsPacketLengthErrors | The total number of packets received with a packet length less than the length of the VRRP header. |
| priorityZeroPktsRcvd | long | vrrpStatsPriorityZeroPktsRcvd | The total number of VRRP packets received by the virtual router with a priority of '0'. |
| priorityZeroPktsSent | long | vrrpStatsPriorityZeroPktsSent | The total number of VRRP packets sent by the virtual router with a priority of '0'. |
| **InstanceV6AdditionalStats**<br>MIB table name: TIMETRA-VRRP-MIB.tVrrpRtrStatisticsTable<br>Monitored class: vrrp.InstanceV6 | | | |
| advertiseIntervalDiscards | long | tVrrpStatAdvIntvlDiscards | The value of tVrrpStatAdvIntvlDiscards indicates the total number of VRRP advertisement packets discarded because the advertisement interval in the received packet was different than the one configured for the local virtual router. |
| advertiseSent | long | tVrrpStatAdvertiseSent | The value of tVrrpStatAdvertiseSent indicates the total number of VRRP advertisements sent by this virtual router. |
| masterChanges | long | tVrrpStatMasterChanges | The value for tVrrpStatMasterChanges indicates the total number of times the virtual router has seen the master virtual router change. |
| preemptedEvents | long | tVrrpStatPreemptedEvents | The value for tVrrpStatPreemptedEvents indicates the total number of times the virtual router has been preempted by another non-owner master with higher priority. |
| preemptEvents | long | tVrrpStatPreemptEvents | The value for tVrrpStatPreemptEvents indicates the total number of times the virtual router has preempted another non-owner master with lower priority. |
| totalDiscards | long | tVrrpStatTotalDiscards | The value of tVrrpStatTotalDiscards indicates the total number of VRRP advertisement packets discarded for any reason. This includes the packets discarded due to advertise interval mismatch and address list mismatch. |
| **InstanceV6Stats**<br>MIB table name: TIMETRA-VRRP-V3-MIB.vrrpRouterStatisticsTable<br>Monitored class: vrrp.InstanceV6 | | | |
| addressListErrors | long | vrrpStatisticsAddressListErrors | The total number of packets received for which the address list does not match the locally configured list for the virtual router. Discontinuities in the value of this counter can occur at re-initialization of the management system, and at other times as indicated by the value of vrrpStatisticsDiscontinuityTime. |

**(3 of 5)**

| 5620 SAM counter name | Type | MIB counter name | Description |
|---|---|---|---|
| advertiseIntervalErrors | long | vrrpStatisticsAdvIntervalErrors | The total number of VRRP advertisement packets received for which the advertisement interval is different than the one configured for the local virtual router. Discontinuities in the value of this counter can occur at re-initialization of the management system, and at other times as indicated by the value of vrrpStatisticsDiscontinuityTime. |
| advertiseRcvd | long | vrrpStatisticsRcvdAdvertisements | The total number of VRRP advertisements received by this virtual router. Discontinuities in the value of this counter can occur at re-initialization of the management system, and at other times as indicated by the value of vrrpStatisticsDiscontinuityTime. |
| becomeMaster | long | vrrpStatisticsMasterTransitions | The total number of times that this virtual router's state has transitioned to MASTER. Discontinuities in the value of this counter can occur at re-initialization of the management system, and at other times as indicated by the value of vrrpStatisticsDiscontinuityTime. |
| invalidAuthType | long | vrrpStatisticsRcvdInvalidAuthentications | The total number of packets received with an unknown authentication type. REFERENCE RFC3768 Section 5.3.6. |
| invalidTypePktsRcvd | long | vrrpStatisticsRcvdInvalidTypePkts | The number of VRRP packets received by the virtual router with an invalid value in the 'type' field. Discontinuities in the value of this counter can occur at re-initialization of the management system, and at other times as indicated by the value of vrrpStatisticsDiscontinuityTime. |
| ipTtlErrors | long | vrrpStatisticsIpTtlErrors | The total number of VRRP packets received by the Virtual router with IPv4 TTL (for VRRP over IPv4) or IPv6 Hop Limit (for VRRP over IPv6) not equal to 255. Discontinuities in the value of this counter can occur at re-initialization of the management system, and at other times as indicated by the value of vrrpStatisticsDiscontinuityTime. REFERENCE RFC3768 Section 5.2.3. |
| packetLengthErrors | long | vrrpStatisticsPacketLengthErrors | The total number of packets received with a packet length less than the length of the VRRP header. Discontinuities in the value of this counter can occur at re-initialization of the management system, and at other times as indicated by the value of vrrpStatisticsDiscontinuityTime. |

**(4 of 5)**

| 5620 SAM counter name | Type | MIB counter name | Description |
|---|---|---|---|
| priorityZeroPktsRcvd | long | vrrpStatisticsRcvdPriZero Packets | The total number of VRRP packets received by the virtual router with a priority of '0'. Discontinuities in the value of this counter can occur at re-initialization of the management system, and at other times as indicated by the value of vrrpStatisticsDiscontinuityTime. REFERENCE RFC3768 Section 5.3.4. |
| priorityZeroPktsSent | long | vrrpStatisticsSentPriZero Packets | The total number of VRRP packets sent by the virtual router with a priority of '0'. Discontinuities in the value of this counter can occur at re-initialization of the management system, and at other times as indicated by the value of vrrpStatisticsDiscontinuityTime. REFERENCE RFC3768 Section 5.3.4. |

**(5 of 5)**

# B. 9471 MME statistics counters

**B.1 9471 MME PM statistics counters** *B-2*

## B.1 9471 MME PM statistics counters

This appendix lists in tabular form the PM statistics counters that the 5620 SAM supports for the 9471 MME. Each counter table corresponds to a 5620 SAM Statistics Record form, and contains the counters that are displayed on the form. Each counter entry in a table contains the following:

- the 5620 SAM GUI counter name
- the 9471 MME 3GPP counter name

**Note —** A statistics counter in the 5620 SAM GUI whose displayed name ends with "Periodic" is a counter that records the difference between the current and previous values of an associated 5620 SAM counter. The tables in this appendix do not list Periodic counters.

Table B-1 lists each statistics class and the associated statistics-counter table.

**Table B-1 Statistics classes and counter tables**

| Class name | See |
|---|---|
| Card CPU Stats | B-2 |
| Hub Card CPU Stats | B-3 |
| MAF Authentication Stats | B-4 |
| MAF Bearer Session Management Stats | B-5 |
| MAF Capacity Stats | B-6 |
| MAF Connection Stats | B-7 |
| MAF CPU Stats | B-8 |
| MAF Dedicated Bearer Stats | B-9 |
| MAF DNS Stats | B-10 |
| MAF Handover Stats | B-11 |
| MAF Interface Stats | B-12 |
| MAF Memory Stats | B-13 |
| MAF Mobility Management Stats | B-14 |
| MAF NACC Stats | B-15 |
| MAF Overload Control Stats | B-16 |
| MAF Paging Stats | B-17 |
| MAF Roaming Stats | B-18 |
| MAF System Service Stats | B-19 |
| MI System Service Stats | B-20 |
| MIF Automated Neighbor Relations | B-21 |
| MIF CPU Stats | B-22 |
| MIF DNS Stats | B-23 |

**(1 of 2)**

| Class name | See |
|---|---|
| MIF Interface Stats | B-24 |
| MIF Memory Stats | B-25 |
| MIF Overload Control Stats | B-26 |
| MIF Quality and Reliability Measurements | B-27 |
| MIF System Service Stats | B-28 |
| MPH CPU Stats | B-29 |
| MPH Memory Stats | B-30 |
| MPH System Service Stats | B-31 |
| OAM Card Base CPU Stats | B-32 |
| OAM Card CPU Stats | B-33 |
| OAM Card Disk Stats | B-34 |
| OAM Card Memory Stats | B-35 |
| OAM Card System Service Stats | B-36 |
| Reliable Cluster Computing Virtual Machine Stats | B-37 |

**(2 of 2)**

### Table B-2 Card CPU Stats counters

| 5620 SAM GUI name | 3GPP name |
|---|---|
| collectionInterval | N/A |
| aveCpuUsage | aveCpuUsage |
| peakCpuUsage | peakCpuUsage |

### Table B-3 Hub Card CPU Stats counters

| 5620 SAM GUI name | 3GPP name |
|---|---|
| collectionInterval | N/A |
| aveCpuUsage | aveCpuUsage |
| peakCpuUsage | peakCpuUsage |

### Table B-4 MAF Authentication Stats counters

| 5620 SAM GUI name | 3GPP name |
|---|---|
| collectionInterval | N/A |
| attemptedAuthenticationRequestsHSS | AttAuthRequestsHSS |
| attemptedAuthenticationRequestsUE | AttAuthRequestsUE |

**(1 of 2)**

| 5620 SAM GUI name | 3GPP name |
|---|---|
| numberOfAuthRequestAbort | NbrAuthRequestAbort |
| numberOfFailedAuthenticationRequestsHSS_Other | NbrFailedAuthRequestsHSS_Other |
| numberOfFailedAuthenticationRequestsUE_Other | NbrFailedAuthRequestsUE_Other |
| numberOfSuccessAuthenticationRequestsHSS | NbrSuccessAuthRequestsHSS |
| numberOfSuccessAuthenticationRequestsUE | NbrSuccessAuthRequestsUE |
| numberOfUEAuthRequestAbort | NbrUEAuthRequestAbort |
| numberOfUpdateLocationAbort | NbrUpdateLocationAbort |

**(2 of 2)**

**Table B-5 MAF Bearer Session Management Stats counters**

| 5620 SAM GUI name | 3GPP name |
|---|---|
| collectionInterval | N/A |
| attBearerResourceModReq | AttBearerResourceModReq |
| attemptedCreateDefaultBearer | AttCreateDefaultBearer |
| attDeleteDefaultBearer | AttDeleteDefaultBearer |
| attemptedUEContextModReq | AttUEContextModReq |
| attemptedUpdateBearerRequests | AttUpdateBearerRequests |
| numberOfCreateDefaultBearerAbort | NbrCreateDefaultBearerAbort |
| numberFailBearerResourceModReq_NoResources | NbrFailBearerResourceModReq_NoResources |
| numberFailBearerResourceModReq_Other | NbrFailBearerResourceModReq_Other |
| numberFailBearerResourceModReq_RejectAtSGW | NbrFailBearerResourceModReq_RejectAtSGW |
| numberFailBearerResourceModReq_SubscripError | NbrFailBearerResourceModReq_SubscripError |
| numberOfFailedCreateDefaultBearer_FailureAtPGW | NbrFailedCreateDefaultBearer_FailureAtPGW |
| numberOfFailedCreateDefaultBearer_FailureAtSGW | NbrFailedCreateDefaultBearer_FailureAtSGW |
| numberOfFailedCreateDefaultBearer_Other | NbrFailedCreateDefaultBearer_Other |
| numberOfFailedUEContextModReq_Other | NbrFailedUEContextModReq_Other |
| numberOfFailedUEContextModReq_TimedOut | NbrFailedUEContextModReq_TimedOut |
| numberOfFailedUpdateBearerRequests_Other | NbrFailedUpdateBearerRequests_Other |
| numberFailureDeleteDefaultBearer_Other | NbrFailureDeleteDefaultBearer_Other |
| numberSuccessBearerResourceModReq | NbrSuccessBearerResourceModReq |
| numberOfSuccessCreateDefaultBearer | NbrSuccessCreateDefaultBearer |
| numberSuccessDeleteDefaultBearer | NbrSuccessDeleteDefaultBearer |
| numberOfSuccessUEContextModReq | NbrSuccessUEContextModReq |
| numberOfSuccessUpdateBearerRequests | NbrSuccessUpdateBearerRequests |
| numberOfUpdateBearerAbort | NbrUpdateBearerAbort |
| numberCreateSessionRespWithPiggyBacking | NbrCreateSessionRespWithPiggyBacking |

**Table B-6 MAF Capacity Stats counters**

| 5620 SAM GUI name | 3GPP name |
|---|---|
| collectionInterval | N/A |
| uECapacityUsage | UECapacityUsage |

**Table B-7 MAF Connection Stats counters**

| 5620 SAM GUI name | 3GPP name |
|---|---|
| collectionInterval | N/A |
| aveConnectedUE | AveConnectedUE |
| aveNbrOfIdleUE | AveNbrOfIdleUE |
| aveNbrOfRegisteredUE | AveNbrOfRegisteredUE |
| aveNumOfDedicatedBearers | AveNumOfDedicatedBearers |
| aveNumOfDefaultBearers | AveNumOfDefaultBearers |
| maxConnectedUE | MaxConnectedUE |
| maxNbrOfIdleUE | MaxNbrOfIdleUE |
| maxNbrOfRegisteredUE | MaxNbrOfRegisteredUE |
| maxNumOfDedicatedBearers | MaxNumOfDedicatedBearers |
| maxNumOfDefaultBearers | MaxNumOfDefaultBearers |

**Table B-8 MAF CPU Stats counters**

| 5620 SAM GUI name | 3GPP name |
|---|---|
| collectionInterval | N/A |
| aveBaseCpuUsage | aveBaseCpuUsage |
| avePerSICpuUsage | avePerSICpuUsage |
| peakBaseCpuUsage | peakBaseCpuUsage |
| peakPerSICpuUsage | peakPerSICpuUsage |

**Table B-9 MAF Dedicated Bearer Stats counters**

| 5620 SAM GUI name | 3GPP name |
|---|---|
| collectionInterval | N/A |
| attemptedCreateDedicatedBearer_QCI_1 | AttCreateDedicatedBearer_QCI_1 |
| attemptedCreateDedicatedBearer_QCI_2 | AttCreateDedicatedBearer_QCI_2 |

**(1 of 4)**

| 5620 SAM GUI name | 3GPP name |
|---|---|
| attemptedCreateDedicatedBearer_QCI_3 | AttCreateDedicatedBearer_QCI_3 |
| attemptedCreateDedicatedBearer_QCI_4 | AttCreateDedicatedBearer_QCI_4 |
| attemptedCreateDedicatedBearer_QCI_5 | AttCreateDedicatedBearer_QCI_5 |
| attemptedCreateDedicatedBearer_QCI_6 | AttCreateDedicatedBearer_QCI_6 |
| attemptedCreateDedicatedBearer_QCI_7 | AttCreateDedicatedBearer_QCI_7 |
| attemptedCreateDedicatedBearer_QCI_8 | AttCreateDedicatedBearer_QCI_8 |
| attemptedCreateDedicatedBearer_QCI_9 | AttCreateDedicatedBearer_QCI_9 |
| attemptedCreateDedicatedBearerSum | AttCreateDedicatedBearer_sum |
| attemptedDeactDedicatedBearer_QCI_1 | AttDeactDedBearer_QCI_1 |
| attemptedDeactDedicatedBearer_QCI_2 | AttDeactDedBearer_QCI_2 |
| attemptedDeactDedicatedBearer_QCI_3 | AttDeactDedBearer_QCI_3 |
| attemptedDeactDedicatedBearer_QCI_4 | AttDeactDedBearer_QCI_4 |
| attemptedDeactDedicatedBearer_QCI_5 | AttDeactDedBearer_QCI_5 |
| attemptedDeactDedicatedBearer_QCI_6 | AttDeactDedBearer_QCI_6 |
| attemptedDeactDedicatedBearer_QCI_7 | AttDeactDedBearer_QCI_7 |
| attemptedDeactDedicatedBearer_QCI_8 | AttDeactDedBearer_QCI_8 |
| attemptedDeactDedicatedBearer_QCI_9 | AttDeactDedBearer_QCI_9 |
| attemptedDeactDedicatedBearer_Sum | AttDeactivateDedBearer_sum |
| attemptedUpdateDedicatedBearer_QCI_1 | AttUpdateDedicatedBearer_QCI_1 |
| attemptedUpdateDedicatedBearer_QCI_2 | AttUpdateDedicatedBearer_QCI_2 |
| attemptedUpdateDedicatedBearer_QCI_3 | AttUpdateDedicatedBearer_QCI_3 |
| attemptedUpdateDedicatedBearer_QCI_4 | AttUpdateDedicatedBearer_QCI_4 |
| attemptedUpdateDedicatedBearer_QCI_5 | AttUpdateDedicatedBearer_QCI_5 |
| attemptedUpdateDedicatedBearer_QCI_6 | AttUpdateDedicatedBearer_QCI_6 |
| attemptedUpdateDedicatedBearer_QCI_7 | AttUpdateDedicatedBearer_QCI_7 |
| attemptedUpdateDedicatedBearer_QCI_8 | AttUpdateDedicatedBearer_QCI_8 |
| attemptedUpdateDedicatedBearer_QCI_9 | AttUpdateDedicatedBearer_QCI_9 |
| attemptedUpdateDedicatedBearer_Sum | AttUpdateDedicatedBearer_sum |
| numberOfCreateDedicatedBearerAbort | NbrCreateDedicatedBearerAbort |
| numberOfDeactDedBearerAbort | NbrDeactDedBearerAbort |
| numberOfDroppedDedBearer_BadQCI | NbrDroppedDedBearer_BadQCI |
| numberOfDroppedDedicatedBearer_QCI_1 | NbrDroppedDedBearer_QCI_1 |
| numberOfDroppedDedicatedBearer_QCI_2 | NbrDroppedDedBearer_QCI_2 |
| numberOfDroppedDedicatedBearer_QCI_3 | NbrDroppedDedBearer_QCI_3 |
| numberOfDroppedDedicatedBearer_QCI_4 | NbrDroppedDedBearer_QCI_4 |
| numberOfDroppedDedicatedBearer_QCI_5 | NbrDroppedDedBearer_QCI_5 |
| numberOfDroppedDedicatedBearer_QCI_6 | NbrDroppedDedBearer_QCI_6 |

**(2 of 4)**

| 5620 SAM GUI name | 3GPP name |
|---|---|
| numberOfDroppedDedicatedBearer_QCI_7 | NbrDroppedDedBearer_QCI_7 |
| numberOfDroppedDedicatedBearer_QCI_8 | NbrDroppedDedBearer_QCI_8 |
| numberOfDroppedDedicatedBearer_QCI_9 | NbrDroppedDedBearer_QCI_9 |
| numberOfDroppedDefaultBearer | NbrDroppedDefaultBearer |
| numberOfFailedCreateDedicatedBearer_BadQCI | NbrFailedCreateDedicatedBearer_BadQCI |
| numberOfFailedCreateDedicatedBearer_Other | NbrFailedCreateDedicatedBearer_Other |
| numberOfFailedCreateDedicatedBearer_QCI_1 | NbrFailedCreateDedicatedBearer_QCI_1 |
| numberOfFailedCreateDedicatedBearer_QCI_2 | NbrFailedCreateDedicatedBearer_QCI_2 |
| numberOfFailedCreateDedicatedBearer_QCI_3 | NbrFailedCreateDedicatedBearer_QCI_3 |
| numberOfFailedCreateDedicatedBearer_QCI_4 | NbrFailedCreateDedicatedBearer_QCI_4 |
| numberOfFailedCreateDedicatedBearer_QCI_5 | NbrFailedCreateDedicatedBearer_QCI_5 |
| numberOfFailedCreateDedicatedBearer_QCI_6 | NbrFailedCreateDedicatedBearer_QCI_6 |
| numberOfFailedCreateDedicatedBearer_QCI_7 | NbrFailedCreateDedicatedBearer_QCI_7 |
| numberOfFailedCreateDedicatedBearer_QCI_8 | NbrFailedCreateDedicatedBearer_QCI_8 |
| numberOfFailedCreateDedicatedBearer_QCI_9 | NbrFailedCreateDedicatedBearer_QCI_9 |
| numberOfFailedDeactDedBearer_BadQCI | NbrFailedDeactDedBearer_BadQCI |
| numberFailedDeactDedicatedBearer_Other | NbrFailedDeactDedBearer_Other |
| numberOfFailedDeactDedicatedBearer_QCI_1 | NbrFailedDeactDedBearer_QCI_1 |
| numberOfFailedDeactDedicatedBearer_QCI_2 | NbrFailedDeactDedBearer_QCI_2 |
| numberOfFailedDeactDedicatedBearer_QCI_3 | NbrFailedDeactDedBearer_QCI_3 |
| numberOfFailedDeactDedicatedBearer_QCI_4 | NbrFailedDeactDedBearer_QCI_4 |
| numberOfFailedDeactDedicatedBearer_QCI_5 | NbrFailedDeactDedBearer_QCI_5 |
| numberOfFailedDeactDedicatedBearer_QCI_6 | NbrFailedDeactDedBearer_QCI_6 |
| numberOfFailedDeactDedicatedBearer_QCI_7 | NbrFailedDeactDedBearer_QCI_7 |
| numberOfFailedDeactDedicatedBearer_QCI_8 | NbrFailedDeactDedBearer_QCI_8 |
| numberOfFailedDeactDedicatedBearer_QCI_9 | NbrFailedDeactDedBearer_QCI_9 |
| numberOfFailedUpdateDedicatedBearer_BadQCI | NbrFailedUpdateDedicatedBearer_BadQCI |
| numberFailedUpdateDedicatedBearer_Other | NbrFailedUpdateDedicatedBearer_Other |
| numberOfFailedUpdateDedicatedBearer_QCI_1 | NbrFailedUpdateDedicatedBearer_QCI_1 |
| numberOfFailedUpdateDedicatedBearer_QCI_2 | NbrFailedUpdateDedicatedBearer_QCI_2 |
| numberOfFailedUpdateDedicatedBearer_QCI_3 | NbrFailedUpdateDedicatedBearer_QCI_3 |
| numberOfFailedUpdateDedicatedBearer_QCI_4 | NbrFailedUpdateDedicatedBearer_QCI_4 |
| numberOfFailedUpdateDedicatedBearer_QCI_5 | NbrFailedUpdateDedicatedBearer_QCI_5 |
| numberOfFailedUpdateDedicatedBearer_QCI_6 | NbrFailedUpdateDedicatedBearer_QCI_6 |
| numberOfFailedUpdateDedicatedBearer_QCI_7 | NbrFailedUpdateDedicatedBearer_QCI_7 |
| numberOfFailedUpdateDedicatedBearer_QCI_8 | NbrFailedUpdateDedicatedBearer_QCI_8 |
| numberOfFailedUpdateDedicatedBearer_QCI_9 | NbrFailedUpdateDedicatedBearer_QCI_9 |

**(3 of 4)**

| 5620 SAM GUI name | 3GPP name |
|---|---|
| numberOfSuccessCreateDedicatedBearer | NbrSuccessCreateDedicatedBearer |
| numberSuccessDeactDedicatedBearer | NbrSuccessDeactDedBearer |
| numberOfSuccessUpdateDedicatedBearer | NbrSuccessUpdateDedicatedBearer |
| numberOfUpdateDedicatedBeererAbort | NbrUpdateDedicatedBeererAbort |
| numberDroppedDedicatedBearer_sum | NbrDroppedDedBearer_sum |

**(4 of 4)**

### Table B-10 MAF DNS Stats counters

| 5620 SAM GUI name | 3GPP name |
|---|---|
| collectionInterval | N/A |
| numberDNSconnectionsClosed | NbrDNSconnClosed |
| numberProbeQueries | NbrProbeQueries |
| numberProbeResponsesReceived | NbrProbeResponsesRcvd |
| numberRequestsInternalFailure | NbrRequestsInternalFailure |
| numberRequestsTimedOut | NbrRequestsTimedOut |
| numberResolveByNetworkService, | NbrResolveByNetworkService |
| numberResolveHostByName | NbrResolveHostByName |
| numberResponsesReceivedLate | NbrResponsesRcvdLate |
| numberResponsesReceived | NbrResponsesReceived |
| numberResponsesSentToAppl | NbrResponsesSentToAppl |
| numberResponsesWithProblem | NbrResponsesWithProblem |
| numberServerQueries | NbrServerQueries |

### Table B-11 MAF Handover Stats counters

| 5620 SAM GUI name | 3GPP name |
|---|---|
| collectionInterval | N/A |
| attCreateIndirectDataFwd | AttCreateIndirectDataFwd |
| attNbrHOFwdReloc | AttNbrHOFwdReloc |
| attNbrHOpathSwitchNewSGW | AttNbrHOpathSwitchNewSGW |
| AttNbrHOpathSwitchSameSGW | AttNbrHOpathSwitchSameSGW |
| attNbrHOreqdNoRelocation | AttNbrHOreqdNoRelocation |
| attNbrHOrequiredMMEreloc | AttNbrHOrequiredMMEreloc |
| attNbrHOto3G2GGn | AttNbrHOto3G2GGn |
| attNbrHOtoLTEGn | AttNbrHOtoLTEGn |

**(1 of 5)**

| 5620 SAM GUI name | 3GPP name |
|---|---|
| attemptedNbrNoPSHOSv | AttNbrNoPSHOSv |
| attemptedResumeRequests | AttResumeRequests |
| attS1HOSameMMEnewSGW | AttS1HOSameMMEnewSGW |
| attS1HOTargetNewMMEnewSGW | AttS1HOTargetNewMMEnewSGW |
| attemptedSuspendRequests | AttSuspendRequests |
| numberCreateIndirectDataFwdSuccess | NbrCreateIndirectDataFwdSuccess |
| numberOfFailedResumeReq_Other | NbrFailedResumeReq_Other |
| numberOfFailedResumeReq_TimedOut | NbrFailedResumeReq_TimedOut |
| numberOfFailedSuspendReq_Other | NbrFailedSuspendReq_Other |
| numberOfFailedSuspendReq_TimedOut | NbrFailedSuspendReq_TimedOut |
| numberHOfailHOreqdNoReloc_Other | NbrHOfailHOreqdNoReloc_Other |
| numberHOfailHOreqdNoReloc_UpdateBearerFail | NbrHOfailHOreqdNoReloc_UpdateBearerFail |
| numberHOfailHOreqdSameMMEnewSGW_Other | NbrHOfailHOreqdSameMMEnewSGW_Other |
| numberHOfailHOreqdSameMMEnewSGW_UpdBearFail | NbrHOfailHOreqdSameMMEnewSGW_UpdBearFail |
| numberHOfailuresFwdReloc_Other | NbrHOfailuresFwdReloc_Other |
| numberHOfailuresFwdReloc_UpdateBearerFailure | NbrHOfailuresFwdReloc_UpdateBearerFailure |
| numberHOfailuresHOreqdReloc_Other | NbrHOfailuresHOreqdReloc_Other |
| numberHOfailuresPathSwitchNewSGW_Other | NbrHOfailuresPathSwitchNewSGW_Other |
| numberHOfailuresPathSwitchNewSGW_UpdateBearerFailure | NbrHOfailuresPathSwitchNewSGW_UpdateBearerFailure |
| numberHOfailuresPathSwitchSameSGW_Other | NbrHOfailuresPathSwitchSameSGW_Other |
| numberHOfailuresPathSwitchSameSGW_UpdateBearerFailure | NbrHOfailuresPathSwitchSameSGW_UpdateBearerFailure |
| numberHOpathSwitchNewSGWAbort | NbrHOpathSwitchNewSGWAbort |
| numberOfHOpathSwitchSameSGWAbort | NbrHOpathSwitchSameSGWAbort |
| numberHOSuccessFwdReloc | NbrHOSuccessFwdReloc |
| numberHOSuccessHOreqdMMEreloc | NbrHOSuccessHOreqdMMEreloc |
| numberHOSuccessHOreqdNoRelocation | NbrHOSuccessHOreqdNoRelocation |
| numberHOSuccessPathSwitchNewSGW | NbrHOSuccessPathSwitchNewSGW |
| numberHOSuccessPathSwitchSameSGW | NbrHOSuccessPathSwitchSameSGW |
| numberHOto3G2GFailureGn_AccessRestriction | NbrHOto3G2GFailureGn_AccessRestriction |
| numberHOto3G2GFailureGn_CtxtRspRejected | NbrHOto3G2GFailureGn_CtxtRspRejected |
| numberHOto3G2GFailureGn_DNSfailure | NbrHOto3G2GFailureGn_DNSfailure |
| numberHOto3G2GFailureGn_FwdRelocRejected | NbrHOto3G2GFailureGn_FwdRelocRejected |
| numberHOto3G2GFailureGn_Linkproblem | NbrHOto3G2GFailureGn_Linkproblem |
| numberHOto3G2GFailureGn_Other | NbrHOto3G2GFailureGn_Other |
| numberHOto3G2GFailureGn_PTMSISigMismatch | NbrHOto3G2GFailureGn_PTMSISigMismatch |
| numberHOto3G2GFailureGn_RelocCompleteTO | NbrHOto3G2GFailureGn_RelocCompleteTO |

**(2 of 5)**

| 5620 SAM GUI name | 3GPP name |
|---|---|
| numberOfHOto3G2GGnAbort | NbrHOto3G2GGnAbort |
| numberOfHOto3G2GSuccessGn | NbrHOto3G2GSuccessGn |
| numberHOtoLTEFailureGn_AuthFailure | NbrHOtoLTEFailureGn_AuthFailure |
| numberHOtoLTEFailureGn_CtxtReqRejected | NbrHOtoLTEFailureGn_CtxtReqRejected |
| numberHOtoLTEFailureGn_DNSfailure | NbrHOtoLTEFailureGn_DNSfailure |
| numberHOtoLTEFailureGn_HoNotifyTimeout | NbrHOtoLTEFailureGn_HoNotifyTimeout |
| numberHOtoLTEFailureGn_HoReqFailure | NbrHOtoLTEFailureGn_HoReqFailure |
| numberHOtoLTEFailureGn_InvalidTAUReq | NbrHOtoLTEFailureGn_InvalidTAUReq |
| numberHOtoLTEFailureGn_Linkproblem | NbrHOtoLTEFailureGn_Linkproblem |
| numberHOtoLTEFailureGn_NoTauAfterHo | NbrHOtoLTEFailureGn_NoTauAfterHo |
| numberHOtoLTEFailureGn_Other | NbrHOtoLTEFailureGn_Other |
| numberHOtoLTEGnAbort | NbrHOtoLTEGnAbort |
| numberHOtoLTESuccessGn | NbrHOtoLTESuccessGn |
| numberNoPSHOFailureSv_Other | NbrNoPSHOFailureSv_Other |
| numberOfNoPSHOSuccessSv | NbrNoPSHOSuccessSv |
| numberOfNoPSHOSvAbort | NbrNoPSHOSvAbort |
| numberPSHOFailureSv_Other | NbrPSHOFailureSv_Other |
| numberPSHOSuccessSv | NbrPSHOSuccessSv |
| numberS1HOFailSourceNewMMEnewSGW_Other | NbrS1HOFailSourceNewMMEnewSGW_Other |
| numberS1HOFailTargetNewMMEnewSGW_Other | NbrS1HOFailTargetNewMMEnewSGW_Other |
| numberS1HOFailTargetNewMMEnewSGW_UpdateBearerFailure | NbrS1HOFailTargetNewMMEnewSGW_UpdateBearerFailure |
| numberS1HOSuccessSameMMEnewSGW | NbrS1HOSuccessSameMMEnewSGW |
| numberS1HOSuccessSourceNewMMEnewSGW | NbrS1HOSuccessSourceNewMMEnewSGW |
| numberS1HOSuccessTargetNewMMEnewSGW | NbrS1HOSuccessTargetNewMMEnewSGW |
| numberOfSuccessResumeReq | NbrSuccessResumeReq |
| numberOfSuccessSuspendReq | NbrSuccessSuspendReq |
| attHOfrom3G2GS3 | AttHOfrom3G2GS3 |
| attHOfromGERANS3 | AttHOfromGERANS3 |
| attHOfromUTRANS3 | AttHOfromUTRANS3 |
| attHOtoGERAN | AttHOtoGERAN |
| attHOtoGERANS3 | AttHOtoGERANS3 |
| attHOtoUTRAN | AttHOtoUTRAN |
| attHOtoUTRANS3 | AttHOtoUTRANS3 |
| attNbrPSHOSv | AttNbrPSHOSv |
| attS1HOSourceNewMMEnewSGW | AttS1HOSourceNewMMEnewSGW |
| numberHOfrom3G2GS3reject_Linkproblem | NbrHOfrom3G2GS3reject_Linkproblem |

**(3 of 5)**

| 5620 SAM GUI name | 3GPP name |
|---|---|
| numberHOfrom3G2GS3reject_Other | NbrHOfrom3G2GS3reject_Other |
| numberHOfrom3G2GS3reject_RATtypeUnknown | NbrHOfrom3G2GS3reject_RATtypeUnknown |
| numberHOfromGERANcanceledS3 | NbrHOfromGERANcanceledS3 |
| numberHOfromGERANfailureS3_HoNotifyTO | NbrHOfromGERANfailureS3_HoNotifyTO |
| numberHOfromGERANfailureS3_HOReqTO | NbrHOfromGERANfailureS3_HOReqTO |
| numberHOfromGERANfailureS3_Linkproblem | NbrHOfromGERANfailureS3_Linkproblem |
| numberHOfromGERANfailureS3_noTargResources | NbrHOfromGERANfailureS3_noTargResources |
| numberHOfromGERANfailureS3_NoTauAfterHo | NbrHOfromGERANfailureS3_NoTauAfterHo |
| numberHOfromGERANfailureS3_Other | NbrHOfromGERANfailureS3_Other |
| numberHOfromGERANS3abort | NbrHOfromGERANS3abort |
| numberHOfromGERANsuccessS3 | NbrHOfromGERANsuccessS3 |
| numberHOfromUTRANcanceledS3 | NbrHOfromUTRANcanceledS3 |
| numberHOfromUTRANfailureS3_HoNotifyTO | NbrHOfromUTRANfailureS3_HoNotifyTO |
| numberHOfromUTRANfailureS3_HOReqTO | NbrHOfromUTRANfailureS3_HOReqTO |
| numberHOfromUTRANfailureS3_Linkproblem | NbrHOfromUTRANfailureS3_Linkproblem |
| numberHOfromUTRANfailureS3_noTargResources | NbrHOfromUTRANfailureS3_noTargResources |
| numberHOfromUTRANfailureS3_NoTauAfterHo | NbrHOfromUTRANfailureS3_NoTauAfterHo |
| numberHOfromUTRANfailureS3_Other | NbrHOfromUTRANfailureS3_Other |
| numberHOfromUTRANS3abort | NbrHOfromUTRANS3abort |
| numberHOfromUTRANsuccessS3 | NbrHOfromUTRANsuccessS3 |
| numberHOtoGERANabort | NbrHOtoGERANabort |
| numberHOtoGERANcanceledS3 | NbrHOtoGERANcanceledS3 |
| numberHOtoGERANfailure_AccessRestriction | NbrHOtoGERANfailure_AccessRestriction |
| numberHOtoGERANfailure_noSGSNfound | NbrHOtoGERANfailure_noSGSNfound |
| numberHOtoGERANfailure_Other | NbrHOtoGERANfailure_Other |
| numberHOtoGERANfailureS3_FwdRelocRespTO | NbrHOtoGERANfailureS3_FwdRelocRespTO |
| numberHOtoGERANfailureS3_LinkProblem | NbrHOtoGERANfailureS3_LinkProblem |
| numberHOtoGERANfailureS3_noTargResources | NbrHOtoGERANfailureS3_noTargResources |
| numberHOtoGERANfailureS3_Other | NbrHOtoGERANfailureS3_Other |
| numberHOtoGERANfailureS3_RelocCompleteTO | NbrHOtoGERANfailureS3_RelocCompleteTO |
| numberHOtoGERANS3abort | NbrHOtoGERANS3abort |
| numberHOtoGERANsuccessS3 | NbrHOtoGERANsuccessS3 |
| numberHOtoUTRANabort | NbrHOtoUTRANabort |
| numberHOtoUTRANcanceledS3 | NbrHOtoUTRANcanceledS3 |
| numberHOtoUTRANfailure_AccessRestriction | NbrHOtoUTRANfailure_AccessRestriction |
| numberHOtoUTRANfailure_noSGSNfound | NbrHOtoUTRANfailure_noSGSNfound |
| numberHOtoUTRANfailure_Other | NbrHOtoUTRANfailure_Other |

**(4 of 5)**

| 5620 SAM GUI name | 3GPP name |
|---|---|
| numberHOtoUTRANfailureS3_FwdRelocRespTO | NbrHOtoUTRANfailureS3_FwdRelocRespTO |
| numberHOtoUTRANfailureS3_LinkProblem | NbrHOtoUTRANfailureS3_LinkProblem |
| numberHOtoUTRANfailureS3_noTargResources | NbrHOtoUTRANfailureS3_noTargResources |
| numberHOtoUTRANfailureS3_Other | NbrHOtoUTRANfailureS3_Other |
| numberHOtoUTRANfailureS3_RelocCompleteTO | NbrHOtoUTRANfailureS3_RelocCompleteTO |
| numberHOtoUTRANS3abort | NbrHOtoUTRANS3abort |
| numberHOtoUTRANsuccessS3 | NbrHOtoUTRANsuccessS3 |

**(5 of 5)**

**Table B-12 MAF Interface Stats counters**

| 5620 SAM GUI name | 3GPP name |
|---|---|
| collectionInterval | N/A |
| attSGsAlert | AttSGsAlert |
| attSGsEPSdetach | AttSGsEPSdetach |
| attSGsIMSIdetach | AttSGsIMSIdetach |
| attSGsLocationUpdate | AttSGsLocationUpdate |
| attSGsMMInfo | AttSGsMMInfo |
| attSGsPageCSbySTMSI | AttSGsPageCSbySTMSI |
| attSGsPageIMSIandLAI | AttSGsPageIMSIandLAI |
| attSGsPageIMSIandVLR | AttSGsPageIMSIandVLR |
| attSGsPagePSbySTMSI | AttSGsPagePSbySTMSI |
| attSGsPageWithNAS | AttSGsPageWithNAS |
| attSGsSignalingProcedures | AttSGsSignalingProcedures |
| aveNumUESGsAssociated | AveNumUESGsAssociated |
| aveNumUESGsLAupdateRequested | AveNumUESGsLAupdateRequested |
| aveNumUESGsNull | AveNumUESGsNull |
| maxNumUESGsAssociated | MaxNumUESGsAssociated |
| maxNumUESGsLAupdateRequested | MaxNumUESGsLAupdateRequested |
| maxNumUESGsNull | MaxNumUESGsNull |
| numberOfBadSeqRespPktsGn | NbrBadSeqRespPktsGn |
| numberOfBadSeqRespPktsS10 | NbrBadSeqRespPktsS10 |
| numberOfBadSeqRespPktsS11 | NbrBadSeqRespPktsS11 |
| numberOfBadSeqRespPktsSv | NbrBadSeqRespPktsSv |
| numberSGsDownlinkUnitDataRcvd | NbrSGsDownlinkUnitDataRcvd |
| numberSGsDownlinkUnitDataSucc | NbrSGsDownlinkUnitDataSucc |
| numberSGsIMSIdetach_Explicit | NbrSGsIMSIdetach_Explicit |

**(1 of 3)**

| 5620 SAM GUI name | 3GPP name |
|---|---|
| numberSGsIMSIdetach_Implicit | NbrSGsIMSIdetach_Implicit |
| numberSGsLocationUpdateAbort | NbrSGsLocationUpdateAbort |
| numberSGsPagingReject_IMSIunknown | NbrSGsPagingReject_IMSIunknown |
| numberSGsPagingReject_Other | NbrSGsPagingReject_Other |
| numberSGsPagingReject_RejectByUser | NbrSGsPagingReject_RejectByUser |
| numberSGsRcvdCauseConditionalIEerror | NbrSGsRcvdCauseConditionalIEerror |
| numberSGsRcvdCauseIncompatProtocolState | NbrSGsRcvdCauseIncompatProtocolState |
| numberSGsRcvdCauseInvalidMandIE | NbrSGsRcvdCauseInvalidMandIE |
| numberSGsRcvdCauseMissingMandIE | NbrSGsRcvdCauseMissingMandIE |
| numberSGsRcvdCauseSemanticErrorInMsg | NbrSGsRcvdCauseSemanticErrorInMsg |
| numberSGsRcvdCauseUnknownMsg | NbrSGsRcvdCauseUnknownMsg |
| numberSGsRcvdConditionalIEerrDetected | NbrSGsRcvdConditionalIEerrDetected |
| numberSGsRcvdMissingMandatoryIE | NbrSGsRcvdMissingMandatoryIE |
| numberSGsRcvdMsgIncompatProtocolState | NbrSGsRcvdMsgIncompatProtocolState |
| numberSGsRcvdMsgTooShort | NbrSGsRcvdMsgTooShort |
| numberSGsRcvdOutOfSequenceIE | NbrSGsRcvdOutOfSequenceIE |
| numberSGsRcvdRepeatedIE | NbrSGsRcvdRepeatedIE |
| numberSGsRcvdSemanticIncorrectIE | NbrSGsRcvdSemanticIncorrectIE |
| numberSGsRcvdSyntaxIncorrectMandIE | NbrSGsRcvdSyntaxIncorrectMandIE |
| numberSGsRcvdSyntaxIncorrectOptionalIE | NbrSGsRcvdSyntaxIncorrectOptionalIE |
| numberSGsRcvdUnknownIE | NbrSGsRcvdUnknownIE |
| numberSGsRcvdUnknownMsgType | NbrSGsRcvdUnknownMsgType |
| numberSGsReleaseRequestRcvd | NbrSGsReleaseRequestRcvd |
| numberSGsReleaseRequestSucc | NbrSGsReleaseRequestSucc |
| numberSGsUplinkUnitDataRcvd | NbrSGsUplinkUnitDataRcvd |
| numberSGsUplinkUnitDataSucc | NbrSGsUplinkUnitDataSucc |
| numberSuccessSGsAlert | NbrSuccessSGsAlert |
| numberSuccessSGsEPSdetach | NbrSuccessSGsEPSdetach |
| numberSuccessSGsIMSIdetach | NbrSuccessSGsIMSIdetach |
| numberSuccessSGsLocationUpdate | NbrSuccessSGsLocationUpdate |
| numberSuccessSGsMMInfo | NbrSuccessSGsMMInfo |
| numberSuccessSGsPageCSbySTMSI | NbrSuccessSGsPageCSbySTMSI |
| numberSuccessSGsPageIMSIandLAI | NbrSuccessSGsPageIMSIandLAI |
| numberSuccessSGsPageIMSIandVLR | NbrSuccessSGsPageIMSIandVLR |
| numberSuccessSGsPagePSbySTMSI | NbrSuccessSGsPagePSbySTMSI |
| numberSuccessSGsPageWithNAS | NbrSuccessSGsPageWithNAS |
| numberSuccessSGsSignalingProcedures | NbrSuccessSGsSignalingProcedures |

**(2 of 3)**

| 5620 SAM GUI name | 3GPP name |
|---|---|
| numberOfBadSeqRespPktsS3 | NbrBadSeqRespPktsS3 |
| numberSGsPagingReject_RoamingRestriction | NbrSGsPagingReject_RoamingRestriction |

**(3 of 3)**

### Table B-13 MAF Memory Stats counters

| 5620 SAM GUI name | 3GPP name |
|---|---|
| collectionInterval | N/A |
| allocableMemResrvd | allocableMemResrvd |
| maxNEmemUsage | maxNEmemUsage |
| memUsage | memUsage |

### Table B-14 MAF Mobility Management Stats counters

| 5620 SAM GUI name | 3GPP name |
|---|---|
| collectionInterval | N/A |
| attemptedAttachRequests | AttAttachRequests |
| attemptedCancelLocationRequest | AttCancelLocationRequest |
| attemptedDeleteSubscriberDataRequest | AttDeleteSubscriberDataRequest |
| attExtServiceRequests | AttExtServiceRequests |
| attemptedIdentityRequests | AttIdentityRequests |
| attemptedInsertSubscriberData | AttInsertSubscriberData |
| attMEidentityChecksS13 | AttMEidentityChecksS13 |
| attemptedNotifyRequest | AttNotifyRequest |
| attemptedPurgeUERequest | AttPurgeUERequest |
| attemptedResetRequest | AttResetRequest |
| attemptedS1Release | AttS1Release |
| attemptedServiceRequests | AttServiceRequests |
| attemptedTAU | AttTAU |
| attUEattachHO | AttUEattachHO |
| attemptedUpdateLocationRequest | AttUpdateLocationRequest |
| eNBreqS1Release | ENBreqS1Release |
| epsDetachMMEAtt | EpsDetachMMEAtt |
| epsDetachMMEimplicitAtt | EpsDetachMMEimplicitAtt |
| epsDetachMMEimplicitSucc | EpsDetachMMEimplicitSucc |
| epsDetachMMESucc | EpsDetachMMESucc |

**(1 of 5)**

| 5620 SAM GUI name | 3GPP name |
|---|---|
| epsDetachUeAtt | EpsDetachUeAtt |
| epsDetachUeSucc | EpsDetachUeSucc |
| numberOfAttachAcceptSent | NbrAttachAcceptSent |
| numberOfAttachCompleteRcvd | NbrAttachCompleteRcvd |
| numberAttachFailureSysRelated_sum | NbrAttachFailureSysRelated_sum |
| numberAttachFailureSysRelatedENB | NbrAttachFailureSysRelatedENB |
| numberAttachFailureSysRelatedMME | NbrAttachFailureSysRelatedMME |
| numberAttachFailureSysRelatedSGW | NbrAttachFailureSysRelatedSGW |
| numberOfAttachReqAbortAfter | NbrAttachReqAbortAfter |
| numberOfAttachReqAbortBefore | NbrAttachReqAbortBefore |
| numberOfEpsDetachAbort | NbrEpsDetachAbort |
| numberExtServiceReqAbort | NbrExtServiceReqAbort |
| numberExtServiceReqFailureSysRelatedENB | NbrExtServiceReqFailureSysRelatedENB |
| numberExtServiceReqFailureSysRelatedMME | NbrExtServiceReqFailureSysRelatedMME |
| numberExtServiceReqFailureSysRelatedSGW | NbrExtServiceReqFailureSysRelatedSGW |
| numberOfFailedAttachRequests_Other | NbrFailedAttachRequests_Other |
| numberOfFailedAttachRequestsNotSysRelated_sum | NbrFailedAttachRequestsNotSysRelated_sum |
| numberOfFailedCancelLocationRequest_Other | NbrFailedCancelLocationRequest_Other |
| numberOfFailedDeleteSubscriberDataRequest_Other | NbrFailedDeleteSubscriberDataRequest_Other |
| numberFailedExtServiceRequests_Other | NbrFailedExtServiceRequests_Other |
| numberFailedExtSvcRequestsNotSysRelated_sum | NbrFailedExtSvcRequestsNotSysRelated_sum |
| numberOfFailedIdentityRequests_Other | NbrFailedIdentityRequests_Other |
| numberOfFailedInsertSubscriberData_Other | NbrFailedInsertSubscriberData_Other |
| numberFailedMEidentityChecksS13_LostComms | NbrFailedMEidentityChecksS13_LostComms |
| numberFailedMEidentityChecksS13_Other | NbrFailedMEidentityChecksS13_Other |
| numberOfFailedNotifyRequest_Other | NbrFailedNotifyRequest_Other |
| numberFailedPDNConnReqwithHO_PGWInfoDoesNotExist | NbrFailedPDNConnReqwithHO_PGWInfoDoesNotExist |
| numberOfFailedPurgeUERequest_Other | NbrFailedPurgeUERequest_Other |
| numberOfFailedResetRequest_Other | NbrFailedResetRequest_Other |
| numberOfFailedServiceRequests_IllegalQCI | NbrFailedServiceRequests_IllegalQCI |
| numberOfFailedServiceRequests_Other | NbrFailedServiceRequests_Other |
| numberOfFailedServiceRequestsNotSysRelated_sum | NbrFailedServiceRequestsNotSysRelated_sum |
| numberFailedSGsAlert_Other | NbrFailedSGsAlert_Other |
| numberFailedSGsEPSdetach_Other | NbrFailedSGsEPSdetach_Other |
| numberFailedSGsIMSIdetach_Other | NbrFailedSGsIMSIdetach_Other |
| numberFailedSGsLocationUpdate_Other | NbrFailedSGsLocationUpdate_Other |
| numberFailedSGsMMInfo_Other | NbrFailedSGsMMInfo_Other |

**(2 of 5)**

| 5620 SAM GUI name | 3GPP name |
|---|---|
| numberFailedSGsPageCSbySTMSI_Other | NbrFailedSGsPageCSbySTMSI_Other |
| numberFailedSGsPageIMSIandLAI_Other | NbrFailedSGsPageIMSIandLAI_Other |
| numberFailedSGsPageIMSIandVLR_Other | NbrFailedSGsPageIMSIandVLR_Other |
| numberFailedSGsPagePSbySTMSI_Other | NbrFailedSGsPagePSbySTMSI_Other |
| numberFailedSGsPageWithNAS_Other | NbrFailedSGsPageWithNAS_Other |
| numberOfFailedTAU_IllegalME | NbrFailedTAU_IllegalME |
| numberOfFailedTAU_IllegalPLMN | NbrFailedTAU_IllegalPLMN |
| numberOfFailedTAU_InvalidMandatoryInfo | NbrFailedTAU_InvalidMandatoryInfo |
| numberFailedTAU_NoCellsInTA | NbrFailedTAU_NoCellsInTA |
| numberOfFailedTAU_Other | NbrFailedTAU_Other |
| numberOfFailedTAUnotSysRelated_sum | NbrFailedTAUnotSysRelated_sum |
| numberOfFailedUpdateLocationRequest_Other | NbrFailedUpdateLocationRequest_Other |
| numberOfIdentityRequestAbort | NbrIdentityRequestAbort |
| numberPDNConnReqwithHO | NbrPDNConnReqwithHO |
| numberOfS1Release_AuthenticationFailure | NbrS1Release_AuthFailure |
| numberOfS1Release_CSFBDTR | NbrS1Release_CSFBDTR |
| numberOfS1Release_FBhandover | NbrS1Release_FBhandover |
| numberOfS1Release_IMSIunknown | NbrS1Release_IMSIunknown |
| numberOfS1Release_IntegrityCheckFailure | NbrS1Release_IntegrityCheckFailure |
| numberS1Release_InterRATredirection | NbrS1Release_InterRATredirection |
| numberOfS1Release_NASDetach | NbrS1Release_NASDetach |
| numberOfS1Release_NASNormalRelease | NbrS1Release_NASNormalRelease |
| numberOfS1Release_NoUEcontext | NbrS1Release_NoUEcontext |
| numberOfS1Release_OAMintervention | NbrS1Release_OAMintervention |
| numberOfS1Release_Other | NbrS1Release_Other |
| numberOfS1Release_RFproblem | NbrS1Release_RFproblem |
| numberOfS1Release_UEinactivity | NbrS1Release_UEinactivity |
| numberOfS1Release_UErelease | NbrS1Release_UErelease |
| numberOfServiceReqAbort | NbrServiceReqAbort |
| numberServiceReqFailureSysRelated_sum | NbrServiceReqFailureSysRelated_sum |
| numberServiceReqFailureSysRelatedENB | NbrServiceReqFailureSysRelatedENB |
| numberServiceReqFailureSysRelatedMME | NbrServiceReqFailureSysRelatedMME |
| numberServiceReqFailureSysRelatedSGW | NbrServiceReqFailureSysRelatedSGW |
| numberSuccessAttachNoGUTInoMmeChange | NbrSuccessAttachNoGUTInoMMEchange |
| numberOfSuccessAttachRequests | NbrSuccessAttachRequests |
| numberSuccessAttachUsingGUTInoMMEchange | NbrSuccessAttachUsingGUTInoMMEchange |
| numberSuccessAttachUsingGUTIwithMMEchange | NbrSuccessAttachUsingGUTIwithMMEchange |

**(3 of 5)**

| 5620 SAM GUI name | 3GPP name |
|---|---|
| numberOfSuccessCancelLocationRequest | NbrSuccessCancelLocationRequest |
| numberOfSuccessDeleteSubscriberDataRequest | NbrSuccessDeleteSubscriberDataRequest |
| numberSuccessExtServiceRequests | NbrSuccessExtServiceRequests |
| numberOfSuccessIdentityRequests | NbrSuccessIdentityRequests |
| numberOfSuccessInsertSubscriberData | NbrSuccessInsertSubscriberData |
| numberSuccessMEidentityChecksS13 | NbrSuccessMEidentityChecksS13 |
| numberOfSuccessNotifyRequest | NbrSuccessNotifyRequest |
| numberOfSuccessPurgeUERequest | NbrSuccessPurgeUERequest |
| numberOfSuccessResetRequest | NbrSuccessResetRequest |
| numberOfSuccessS1Release | NbrSuccessS1Release |
| numberOfSuccessServiceRequests | NbrSuccessServiceRequests |
| numberOfSuccessTAU | NbrSuccessTAU |
| numberOfSuccessUpdateLocationRequest | NbrSuccessUpdateLocationRequest |
| numberOfTAUAbort | NbrTAUAbort |
| tauInterMmeAtt | TauInterMmeAtt |
| tauInterMmeFail_IllegalME | TauInterMmeFail_IllegalME |
| tauInterMmeFail_IllegalPLMN | TauInterMmeFail_IllegalPLMN |
| tauInterMmeFail_InvalidMandatoryInfo | TauInterMmeFail_InvalidMandatoryInfo |
| tauInterMmeFail_Other | TauInterMmeFail_Other |
| tauInterMmeInterSgwAtt | TauInterMmeInterSgwAtt |
| tauInterMmeInterSgwFail_Other | TauInterMmeInterSgwFail_Other |
| tauInterMmeInterSgwSucc | TauInterMmeInterSgwSucc |
| tauInterMmeSucc | TauInterMmeSucc |
| tauInterSgwAtt | TauInterSgwAtt |
| tauInterSgwFail_Other | TauInterSgwFail_Other |
| tauInterSgwSucc | TauInterSgwSucc |
| numberFailedTAUinterRAT_CtxtReqRejected | NbrFailedTAUinterRAT_CtxtReqRejected |
| numberFailedTAUinterRAT_DNSfailNoSGSN | NbrFailedTAUinterRAT_DNSfailNoSGSN |
| numberFailedTAUinterRAT_HSSauthFail | NbrFailedTAUinterRAT_HSSauthFail |
| numberFailedTAUinterRAT_InvalidTAUReq | NbrFailedTAUinterRAT_InvalidTAUReq |
| numberFailedTAUinterRAT_LinkProblem | NbrFailedTAUinterRAT_LinkProblem |
| numberFailedTAUinterRAT_Other | NbrFailedTAUinterRAT_Other |
| numberFailedTAUinterRAT_SGSNauthFail | NbrFailedTAUinterRAT_SGSNauthFail |
| numberFailedTAUinterRAT_UEauthFail | NbrFailedTAUinterRAT_UEauthFail |
| numberRejectedTAUinterRAT_accessRestricted | NbrRejectedTAUinterRAT_accessRestricted |
| numberRejectedTAUinterRAT_NoCellsInTA | NbrRejectedTAUinterRAT_NoCellsInTA |
| numberRejectedTAUinterRAT_regionalSubscript | NbrRejectedTAUinterRAT_regionalSubscript |

**(4 of 5)**

| 5620 SAM GUI name | 3GPP name |
|---|---|
| numberRejectedTAUinterRAT_roamingRestricted | NbrRejectedTAUinterRAT_roamingRestricted |
| rauAbortS3 | RauAbortS3 |
| rauAttS3 | RauAttS3 |
| rauFailS3_CtxtRespRejected | RauFailS3_CtxtRespRejected |
| rauFailS3_LinkProblem | RauFailS3_LinkProblem |
| rauFailS3_Other | RauFailS3_Other |
| rauFailS3_PTMSISigMismatch | RauFailS3_PTMSISigMismatch |
| rauFailS3_unknownUE | RauFailS3_unknownUE |
| rauInterSgwAbortS3 | RauInterSgwAbortS3 |
| rauInterSgwAttS3 | RauInterSgwAttS3 |
| rauInterSgwFailS3_Other | RauInterSgwFailS3_Other |
| rauInterSgwSuccS3 | RauInterSgwSuccS3 |
| rauIntraSgwAbortS3 | RauIntraSgwAbortS3 |
| rauIntraSgwAttS3 | RauIntraSgwAttS3 |
| rauIntraSgwFailS3_Other | RauIntraSgwFailS3_Other |
| rauIntraSgwSuccS3 | RauIntraSgwSuccS3 |
| tauAttGn | TauAttGn |
| tauAttS3 | TauAttS3 |
| tauFailGn_Other | TauFailGn_Other |
| tauFailS3_Other | TauFailS3_Other |
| tauInterSgwAttS3 | TauInterSgwAttS3 |
| tauInterSgwFailS3_Other | TauInterSgwFailS3_Other |
| tauInterSgwSuccS3 | TauInterSgwSuccS3 |
| tauIntraSgwAttS3 | TauIntraSgwAttS3 |
| tauIntraSgwFailS3_Other | TauIntraSgwFailS3_Other |
| tauIntraSgwSuccS3 | TauIntraSgwSuccS3 |
| tauSuccGn | TauSuccGn |
| tauSuccS3 | TauSuccS3 |

**(5 of 5)**

### Table B-15 MAF NACC Stats counters

| 5620 SAM GUI name | 3GPP name |
|---|---|
| collectionInterval | N/A |
| numberRIMmsgsFailed_locateENBfailed | NbrRIMmsgsFailed_locateENBfailed |
| numberRIMmsgsFailed_locateSGSNfailed | NbrRIMmsgsFailed_locateSGSNfailed |
| numberRIMmsgsFailed_Other | NbrRIMmsgsFailed_Other |

**(1 of 2)**

| 5620 SAM GUI name | 3GPP name |
|---|---|
| numberRIMmsgsRelayedSuccessfully | NbrRIMmsgsRelayedSuccessfully |

**(2 of 2)**

**Table B-16 MAF Overload Control Stats counters**

| 5620 SAM GUI name | 3GPP name |
|---|---|
| collectionInterval | N/A |
| numberAttachMsgsRejected | NbrAttachMsgsRejected |
| numberBearerResourceAllocMsgsRejected | NbrBearerResourceAllocMsgsRejected |
| numberBearerResourceModifyMsgsRejected | NbrBearerResourceModifyMsgsRejected |
| numberContextRequestMsgsRejected | NbrContextRequestMsgsRejected |
| numberCreateBearerMsgsRejected | NbrCreateBearerMsgsRejected |
| numberDeactDedBearerMsgsRejected | NbrDeactDedBearerMsgsRejected |
| numberDetachDropped | NbrDetachDropped |
| numberDLdataNotifyMsgsRejected | NbrDLdataNotifyMsgsRejected |
| numberFwdRelocationReqMsgsRejected | NbrFwdRelocationReqMsgsRejected |
| numberGUTIreallocMsgsRejected | NbrGUTIreallocMsgsRejected |
| numberHandoverRequiredMsgsRejected | NbrHandoverRequiredMsgsRejected |
| numberInterRatHOGnMsgsRejected | NbrInterRatHOGnMsgsRejected |
| numberPDNconnectMsgsRejected | NbrPDNconnectMsgsRejected |
| numberPDNDisconnectMsgsRejected | NbrPDNDisconnectMsgsRejected |
| numberS1HOMsgsRejected | NbrS1HOMsgsRejected |
| numberS1ReleaseMsgsDropped | NbrS1ReleaseMsgsDropped |
| numberServiceReqMsgsRejected | NbrServiceReqMsgsRejected |
| numberSGsPagingReqMsgsRejected | NbrSGsPagingReqMsgsRejected |
| numberTAUMsgsRejected | NbrTAUMsgsRejected |
| numberUpdateBearerMsgsRejected | NbrUpdateBearerMsgsRejected |
| numberX2HOMsgsRejected | NbrX2HOMsgsRejected |
| numberInterRatHOS3GERANMsgsRejected | NbrInterRatHOS3GERANMsgsRejected |
| nuumberInterRatHOS3UtranMsgsRejected | NbrInterRatHOS3UtranMsgsRejected |

**Table B-17 MAF Paging Stats counters**

| 5620 SAM GUI name | 3GPP name |
|---|---|
| collectionInterval | N/A |
| attemptedPaging | AttPaging |

**(1 of 2)**

| 5620 SAM GUI name | 3GPP name |
|---|---|
| attemptedPaging_1stAttempt | AttPaging_FirstAttempt |
| attemptedPaging_4thAttempt | AttPaging_FourthAttempt |
| attemptedPaging_2ndAttempt | AttPaging_SecondAttempt |
| attemptedPaging_3rdAttempt | AttPaging_ThirdAttempt |
| numberOfPagingFailures_NonSystemRelated | NbrPagingFailures_NonSystemRelated |
| numberOfPagingFailures_SystemRelated | NbrPagingFailures_SystemRelated |
| numberOfPagingFailures_Timeout | NbrPagingFailures_Timeout |
| numberOfPagingTO_1stAttempt | NbrPagingTO_FirstAttempt |
| numberOfPagingTO_4thAttempt | NbrPagingTO_FourthAttempt |
| numberOfPagingTO_2ndAttempt | NbrPagingTO_SecondAttempt |
| numberOfPagingTO_3rdAttempt | NbrPagingTO_ThirdAttempt |

**(2 of 2)**

**Table B-18 MAF Roaming Stats counters**

| 5620 SAM GUI name | 3GPP name |
|---|---|
| collectionInterval | N/A |
| numberHomeUEsNotAllowed_TACnotAllowed | NbrHomeUEsNotAllowed_TACnotAllowed |
| numberRoamersNotAllowed_Other | NbrRoamersNotAllowed_Other |
| numberRoamersNotAllowed_TACnotAllowed | NbrRoamersNotAllowed_TACnotAllowed |
| numberRoamersNotAllowed_UnknPLMN | NbrRoamersNotAllowed_UnknPLMN |

**Table B-19 MAF System Service Stats counters**

| 5620 SAM GUI name | 3GPP name |
|---|---|
| collectionInterval | N/A |
| alrmCritical | alrmCritical |
| alrmMajor | alrmMajor |
| alrmMinor | alrmMinor |
| asrtESC | asrtESC |
| asrtNonESCCritical | asrtNonESCCritical |
| asrtNonESCMajor | asrtNonESCMajor |
| asrtNonESCMinor | asrtNonESCMinor |
| memAllocFail | memAllocFail |
| reInitServiceManual | reInitServiceManual |
| reInitServiceSelf | reInitServiceSelf |

**(1 of 2)**

| 5620 SAM GUI name | 3GPP name |
|---|---|
| restartTask | restartTask |

**(2 of 2)**

**Table B-20 MI System Service Stats counters**

| 5620 SAM GUI name | 3GPP name |
|---|---|
| collectionInterval | N/A |
| chgAlarms | chgAlarms |
| eventsAddedtoMIdb | eventsAddedtoMIdb |
| globalDiscExec | globalDiscExec |
| nbiGetBulkRequests | nbiGetBulkRequests |
| nbiGetNextRequests | nbiGetNextRequests |
| nbiGetRequests | nbiGetRequests |
| newAlarms | newAlarms |
| snmpCountsCollected | snmpCountsCollected |

**Table B-21 MIF Automated Neighbor Relations counters**

| 5620 SAM GUI name | 3GPP name |
|---|---|
| collectionInterval | N/A |
| numberANRmsgsNotSent | NbrANRmsgsNotSent |
| numberConfigTransferTunnelRcvd | NbrConfigTransferTunnelRcvd |
| numberConfigTransferTunnelSent | NbrConfigTransferTunnelSent |
| numberENBconfigTransferRcvd | NbrENBconfigTransferRcvd |
| numberMMEconfigTransferSent | NbrMMEconfigTransferSent |

**Table B-22 MIF CPU Stats counters**

| 5620 SAM GUI name | 3GPP name |
|---|---|
| collectionInterval | N/A |
| aveBaseCpuUsage | aveBaseCpuUsage |
| avePerSICpuUsage | avePerSICpuUsage |
| peakBaseCpuUsage | peakBaseCpuUsage |
| peakPerSICpuUsage | peakPerSICpuUsage |

**Table B-23 MIF DNS Stats counters**

| 5620 SAM GUI name | 3GPP name |
|---|---|
| collectionInterval | N/A |
| numberDNSconnectionsClosed | NbrDNSconnClosed |
| numberProbeQueries | NbrProbeQueries |
| numberProbeResponsesReceived | NbrProbeResponsesRcvd |
| numberRequestsInternalFailure | NbrRequestsInternalFailure |
| numberRequestsTimedOut | NbrRequestsTimedOut |
| numberResolveByNetworkService, | NbrResolveByNetworkService |
| numberResolveHostByName | NbrResolveHostByName |
| numberResponsesReceivedLate | NbrResponsesRcvdLate |
| numberResponsesReceived | NbrResponsesReceived |
| numberResponsesSentToAppl | NbrResponsesSentToAppl |
| numberResponsesWithProblem | NbrResponsesWithProblem |
| numberServerQueries | NbrServerQueries |

**Table B-24 MIF Interface Stats counters**

| 5620 SAM GUI name | 3GPP name |
|---|---|
| collectionInterval | N/A |
| attemptedS1MMEconnEst | AttS1MMEconnEst |
| numberBadSeqRespPktsS10 | NbrBadSeqRespPktsS10 |
| numberBadSeqRespPktsS11 | NbrBadSeqRespPktsS11 |
| numberOfBadSeqRespPktsSv | NbrBadSeqRespPktsSv |
| numberOfFailedS1MMEconnEst_Other | NbrFailedS1MMEconnEst_Other |
| numberOfMissed_GnGtpEcho | NbrMissed_GnGtpEcho |
| numberMissed_S10gtpEcho | NbrMissed_S10gtpEcho |
| numberOfMissed_S11gtpEcho | NbrMissed_S11gtpEcho |
| numberOfMissed_SvGtpEcho | NbrMissed_SvGtpEcho |
| numberOfTO_GnGtpc | NbrTO_GnGtpc |
| numberTO_S10gtpc | NbrTO_S10gtpc |
| numberOfTO_S11gtpc | NbrTO_S11gtpc |
| numberOfTO_SvGtpc | NbrTO_SvGtpc |
| numSuccessS1MMEconnEst | NumSuccessS1MMEconnEst |
| total_GnGtpEcho | Total_GnGtpEcho |
| total_S10gtpEcho | Total_S10gtpEcho |
| total_S11gtpEcho | Total_S11gtpEcho |

**(1 of 2)**

| 5620 SAM GUI name | 3GPP name |
|---|---|
| total_SvGtpEcho | Total_SvGtpEcho |
| totalReqRcvdGn | TotalReqRcvdGn |
| totalReqRcvdS10 | TotalReqRcvdS10 |
| totalReqRcvdS11 | TotalReqRcvdS11 |
| totalReqRcvdSv | TotalReqRcvdSv |
| totalReqSent_GnGtpc | TotalReqSent_GnGtpc |
| totalReqSent_S10gtpc | TotalReqSent_S10gtpc |
| totalReqSent_S11gtpc | TotalReqSent_S11gtpc |
| totalReqSent_SvGtpc | TotalReqSent_SvGtpc |
| numberBadSeqRespPktsS3 | NbrBadSeqRespPktsS3 |
| numberMissed_S3GtpEcho | NbrMissed_S3GtpEcho |
| numberRexmit_GnGtpc | NbrRexmit_GnGtpc |
| numberRexmit_S10Gtpc | NbrRexmit_S10Gtpc |
| numberRexmit_S11Gtpc | NbrRexmit_S11Gtpc |
| numberRexmit_S3Gtpc | NbrRexmit_S3Gtpc |
| numberRexmit_SvGtpc | NbrRexmit_SvGtpc |
| numberTO_S3Gtpc | NbrTO_S3Gtpc |
| total_S3GtpEcho | Total_S3GtpEcho |
| totalReqRcvdS3 | TotalReqRcvdS3 |
| totalReqSent_S3Gtpc | TotalReqSent_S3Gtpc |

**(2 of 2)**

### Table B-25 MIF Memory Stats counters

| 5620 SAM GUI name | 3GPP name |
|---|---|
| collectionInterval | N/A |
| allocableMemResrvd | allocableMemResrvd |
| maxNEmemUsage | maxNEmemUsage |
| memUsage | memUsage |

### Table B-26 MIF Overload Control Stats counters

| 5620 SAM GUI name | 3GPP name |
|---|---|
| collectionInterval | N/A |
| numberGnmsgsDropped | NbrGnmsgsDropped |
| numberS10msgsDropped | NbrS10msgsDropped |

**(1 of 2)**

| 5620 SAM GUI name | 3GPP name |
|---|---|
| numberS11msgsDropped | NbrS11msgsDropped |
| numberS13msgsDropped | NbrS13msgsDropped |
| numberS1HOMsgsRejected | NbrS1HOMsgsRejected |
| numberS1msgsDropped | NbrS1msgsDropped |
| numberS6amsgsDropped | NbrS6amsgsDropped |
| numberSGsmsgsDropped | NbrSGsmsgsDropped |
| numberSvmsgsDropped | NbrSvmsgsDropped |
| numberX1_1msgsDropped | NbrX1_1msgsDropped |
| numberX2msgsDropped | NbrX2msgsDropped |

**(2 of 2)**

**Table B-27 MIF Quality and Reliability Measurements counters**

| 5620 SAM GUI name | 3GPP name |
|---|---|
| collectionInterval | N/A |
| numberOfTimesLinkIsDown_Gn | NbrTimesLinkIsDown_Gn |
| numberTimesLinkIsDown_S10 | NbrTimesLinkIsDown_S10 |
| numberOfTimesLinkIsDown_S11 | NbrTimesLinkIsDown_S11 |
| numberOfTimesLinkIsDown_S1MME | NbrTimesLinkIsDown_S1MME |
| numberOfTimesLinkIsDown_S6a | NbrTimesLinkIsDown_S6a |
| numberTimesLinkIsDown_SGs | NbrTimesLinkIsDown_SGs |
| numberOfTimesLinkIsDown_Sv | NbrTimesLinkIsDown_Sv |
| numberTimesLinkIsDown_S13 | NbrTimesLinkIsDown_S13 |
| numberTimesLinkIsDown_S3 | NbrTimesLinkIsDown_S3 |

**Table B-28 MIF System Service Stats counters**

| 5620 SAM GUI name | 3GPP name |
|---|---|
| collectionInterval | N/A |
| alrmCritical | alrmCritical |
| alrmMajor | alrmMajor |
| alrmMinor | alrmMinor |
| asrtESC | asrtESC |
| asrtNonESCCritical | asrtNonESCCritical |
| asrtNonESCMajor | asrtNonESCMajor |
| asrtNonESCMinor | asrtNonESCMinor |

**(1 of 2)**

| 5620 SAM GUI name | 3GPP name |
|---|---|
| memAllocFail | memAllocFail |
| reInitServiceManual | reInitServiceManual |
| reInitServiceSelf | reInitServiceSelf |
| restartTask | restartTask |

**(2 of 2)**

### Table B-29 MPH CPU Stats counters

| 5620 SAM GUI name | 3GPP name |
|---|---|
| collectionInterval | N/A |
| aveBaseCpuUsage | aveBaseCpuUsage |
| avePerSICpuUsage | avePerSICpuUsage |
| peakBaseCpuUsage | peakBaseCpuUsage |
| peakPerSICpuUsage | peakPerSICpuUsage |

### Table B-30 MPH Memory Stats counters

| 5620 SAM GUI name | 3GPP name |
|---|---|
| collectionInterval | N/A |
| allocableMemResrvd | allocableMemResrvd |
| maxNEmemUsage | maxNEmemUsage |
| memUsage | memUsage |

### Table B-31 MPH System Service Stats counters

| 5620 SAM GUI name | 3GPP name |
|---|---|
| collectionInterval | N/A |
| alrmCritical | alrmCritical |
| alrmMajor | alrmMajor |
| alrmMinor | alrmMinor |
| alrmWarning | alrmWarning |
| asrtESC | asrtESC |
| asrtNonESCCritical | asrtNonESCCritical |
| asrtNonESCMajor | asrtNonESCMajor |
| asrtNonESCMinor | asrtNonESCMinor |
| audErrCount | audErrCount |

**(1 of 2)**

| 5620 SAM GUI name | 3GPP name |
|---|---|
| audManAct | audManAct |
| audNewEvent | audNewEvent |
| exceptionService | exceptionService |
| memAllocFail | memAllocFail |
| reInitServiceManual | reInitServiceManual |
| reInitServiceSelf | reInitServiceSelf |
| restartTask | restartTask |

**(2 of 2)**

### Table B-32 OAM Card Base CPU Stats counters

| 5620 SAM GUI name | 3GPP name |
|---|---|
| collectionInterval | N/A |
| aveBaseCpuUsage | aveBaseCpuUsage |
| peakBaseCpuUsage | peakBaseCpuUsage |

### Table B-33 OAM Card CPU Stats counters

| 5620 SAM GUI name | 3GPP name |
|---|---|
| collectionInterval | N/A |
| aveCpuUsage | aveCpuUsage |
| peakCpuUsage | peakCpuUsage |

### Table B-34 OAM Card Disk Stats counters

| 5620 SAM GUI name | 3GPP name |
|---|---|
| collectionInterval | N/A |
| diskIOReadRate | diskIOReadRate |
| diskIOWriteRate | diskIOWriteRate |

### Table B-35 OAM Card Memory Stats counters

| 5620 SAM GUI name | 3GPP name |
|---|---|
| collectionInterval | N/A |
| maxNEmemUsage | maxNEmemUsage |

**(1 of 2)**

| 5620 SAM GUI name | 3GPP name |
|---|---|
| memUsage | memUsage |

**(2 of 2)**

**Table B-36 OAM Card System Service Stats counters**

| 5620 SAM GUI name | 3GPP name |
|---|---|
| collectionInterval | N/A |
| alrmCritical | alrmCritical |
| alrmMajor | alrmMajor |
| alrmMinor | alrmMinor |
| asrtESC | asrtESC |
| asrtNonESCCritical | asrtNonESCCritical |
| asrtNonESCMajor | asrtNonESCMajor |
| asrtNonESCMinor | asrtNonESCMinor |

**Table B-37 Reliable Cluster Computing Virtual Machine Stats counters**

| 5620 SAM GUI name | 3GPP name |
|---|---|
| collectionInterval | N/A |
| act2StbyVMStateChange | Act2StbyVMStateChange |
| act2UnavailVMStateChange | Act2UnavailVMStateChange |
| other2UnavailVMStateChange | Other2UnavailVMStateChange |
| stby2ActVMStateChange | Stby2ActVMStateChange |
| stby2UnavailVMStateChange | Stby2UnavailVMStateChange |

# Customer documentation and product support

## Customer documentation

http://www.alcatel-lucent.com/myaccess

Product manuals and documentation updates are available at alcatel-lucent.com. If you are a new user and require access to this service, please contact your Alcatel-Lucent sales representative.

## Technical Support

http://support.alcatel-lucent.com

## Documentation feedback

documentation.feedback@alcatel-lucent.com

© 2011 Alcatel-Lucent. All rights reserved.

3HE 06503 AAAB TQZZA Edition 01